MINOLTA®

4K ULTRAHD

MN4KPRO

MN4KPRO User Manual

About this Manual

Congratulations on purchasing the Minolta MN4KPRO Camcorder!
The contents of this manual are subject to change without notice. Note that the example screens and product illustrations shown in this User's Guide may differ somewhat from the screens and configuration of the actual camcorder.

Copyright

This manual contains proprietary information protected by copyright. All rights are reserved. No part of this manual may be reproduced by any mechanical, electronic or other means, in any form, without prior written permission of Elite Brands Inc. © 2023.

FEDERAL COMMUNICATIONS COMMISSION INTERFERENCE STATEMENT

This equipment has been tested and found to comply with the limits for a Class B digital device, pursuant to Part 15 of the FCC Rules. These limits are designed to provide reasonable protection against harmful interference in a residential installation. This equipment generates, uses and can radiate radio frequency energy and, if not installed and used in accordance with the instructions, may cause harmful interference to radio communications. However, there is no guarantee that interference will not occur in a particular installation. If this equipment does cause harmful interference to radio or television reception, which can be determined by turning the equipment off and on, the user is encouraged to try to correct the interference by one or more of the following measures:

- Reorient or relocate the receiving antenna.
- Increase the separation between the equipment and receiver.
- Connect the equipment into an outlet on a circuit different from that to which the receiver is connected.
- Consult the dealer or an experienced radio/TV technician for help.

CAUTION:

Any changes or modifications not expressly approved by the party responsible for compliance could void the user's authority to operate the equipment.
This device complies with Part 15 of the FCC Rules. Operation is subject to the following two conditions:

(1) This device may not cause harmful interference and

(2) This device must accept any interference received, including interference that may cause undesired operation.

RF Exposure Warning

This equipment complies with FCC RF radiation exposure limits set forth for an uncontrolled environment. This equipment must be installed and operated in accordance with provided instructions and must not be co-located or operating in conjunction with any other antenna or transmitter. End-users and installers must

be provided with antenna installation instructions and transmitter operating conditions for satisfying RF exposure compliance.
FCC: SAR standard Value: 1.6 W/Kg, Maximal Measure: 0.4 W/kg

CE Mark Warning
This is a Class B product, in a domestic environment, this product may cause radio interference, in which case the user may be required to take adequate measures.

Safety and Handling Precautions

Camcorder Information
- Do not disassemble or attempt to service the camcorder yourself.
- Do not expose the camcorder to moisture, or extreme temperatures.
- Allow the camcorder to warm up when moving from cold to warm temperatures.
- Do not touch and put pressure on the camcorder lens.
- Do not expose the lens to direct sunlight for extended periods.
- Do not use abrasive chemicals, cleaning solvents or strong detergents to clean the product. Wipe the product with a slightly damp soft cloth.
- Do not use the flash or LED Light near a person's eyes to prevent possible eye injury.
- To prevent you from falling over or resulting in traffic accident, please do not use the camcorder while you are walking, driving or riding a vehicle.
- Please handle the camcorder strap with care, and never place the strap around the neck of an infant or child. Wrapping the strap around a neck may cause suffocation.
- Do not subject the LCD screen to impact.
- To prevent the risk of fire or electric shock, do not expose this appliance to rain or moisture.

Battery Information
- Turn off the camcorder before installing or removing the battery.
- Use only the provided batteries or type of battery and charger that came with your camcorder. Using other types of battery or charger may damage the device and invalidate the warranty.
- Inserting the battery upside down can cause damage to the product and possibly cause an explosion.
- When the camcorder is used for an extended period of time, it is normal for the camcorder body to feel warm.
- Download all pictures and remove the battery from the camcorder if you are going to store the camcorder for a long period of time.

- The type of battery and the battery power level may cause the lens to be stuck up. Ensure you use the correct battery type and use a fully charged battery.
- Risk of explosion if battery is replaced by an incorrect type. Dispose of used batteries according to the instructions.
- Please keep the batteries out of the reach of children to prevent from swallowing batteries, which might cause poisoning.
- Once the battery's color changes or its shape is twisted, please stop using it.

USB adapter Information

- Do not expose the adapter to high temperatures or moisture places. Otherwise, it may cause fire or electric shock.
- Do not attempt to repair, disassemble, change or transform the adapter.
- Avoid sudden changes in temperature, which may cause condensation on the adapter’s internal surfaces. Please do not use it immediately in this situation.
- Do not touch the plug with wet hands. Otherwise, it may cause electric shock.
- Do not use the travel voltage converter or AC/DC power inverter. Otherwise, it may cause damage, overheating, malfunction or fire to the camcorder.

1. About Your Camcorder

1.1 Camcorder Interface

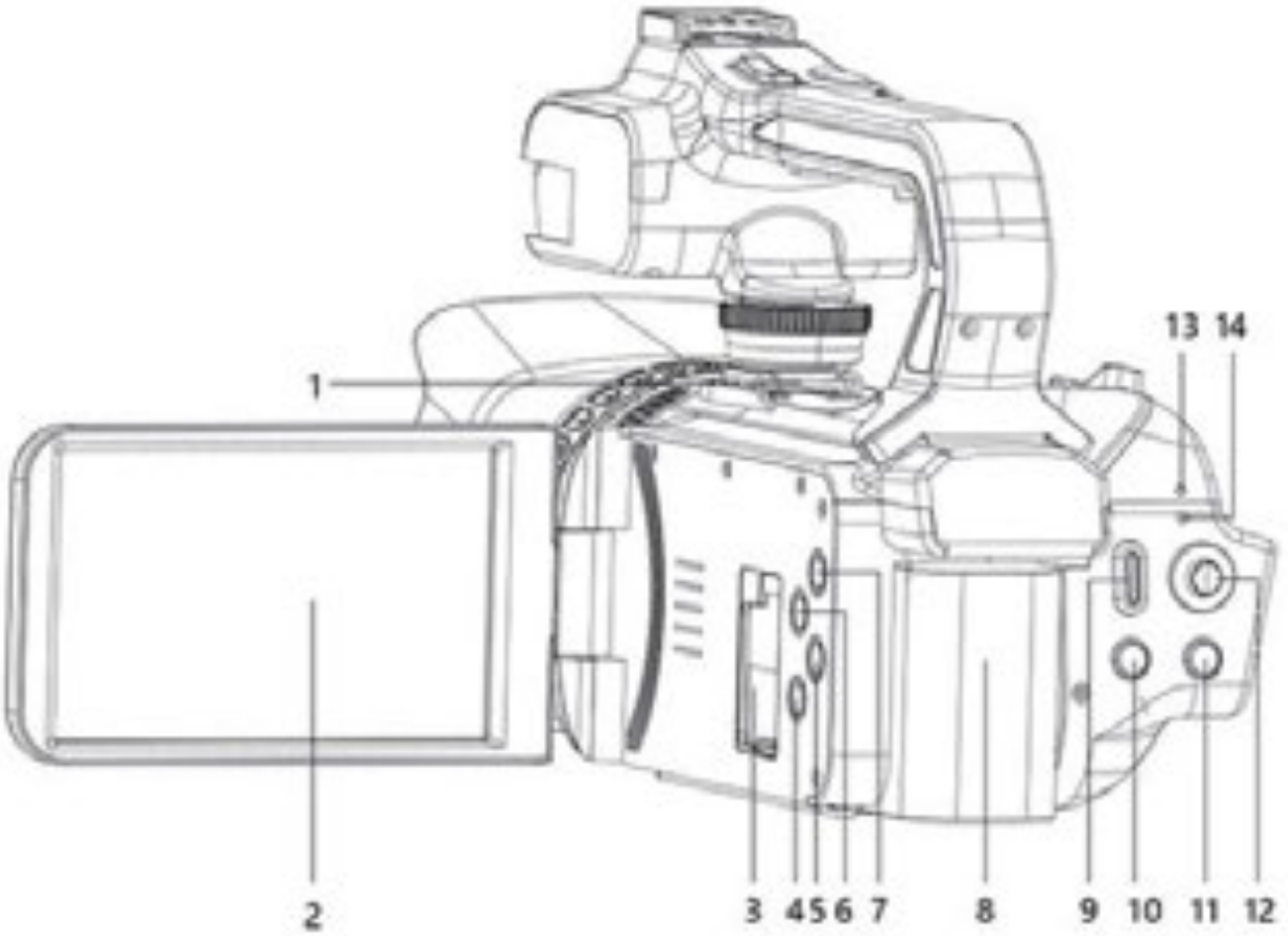

1. Hot Shoe Mount	8. Battery
2. LCD Screen	9. Record Button
3. Memory Card Slot	10. Shutter Button
4. Playback Button	11. Display Button
5. Mode Button	12. OK | Up | Down | Left | Right Buttons
6. Menu Button	13. Charging Indicator LED
7. Power | OK	14. Status Indicator LED

1. About Your Camcorder

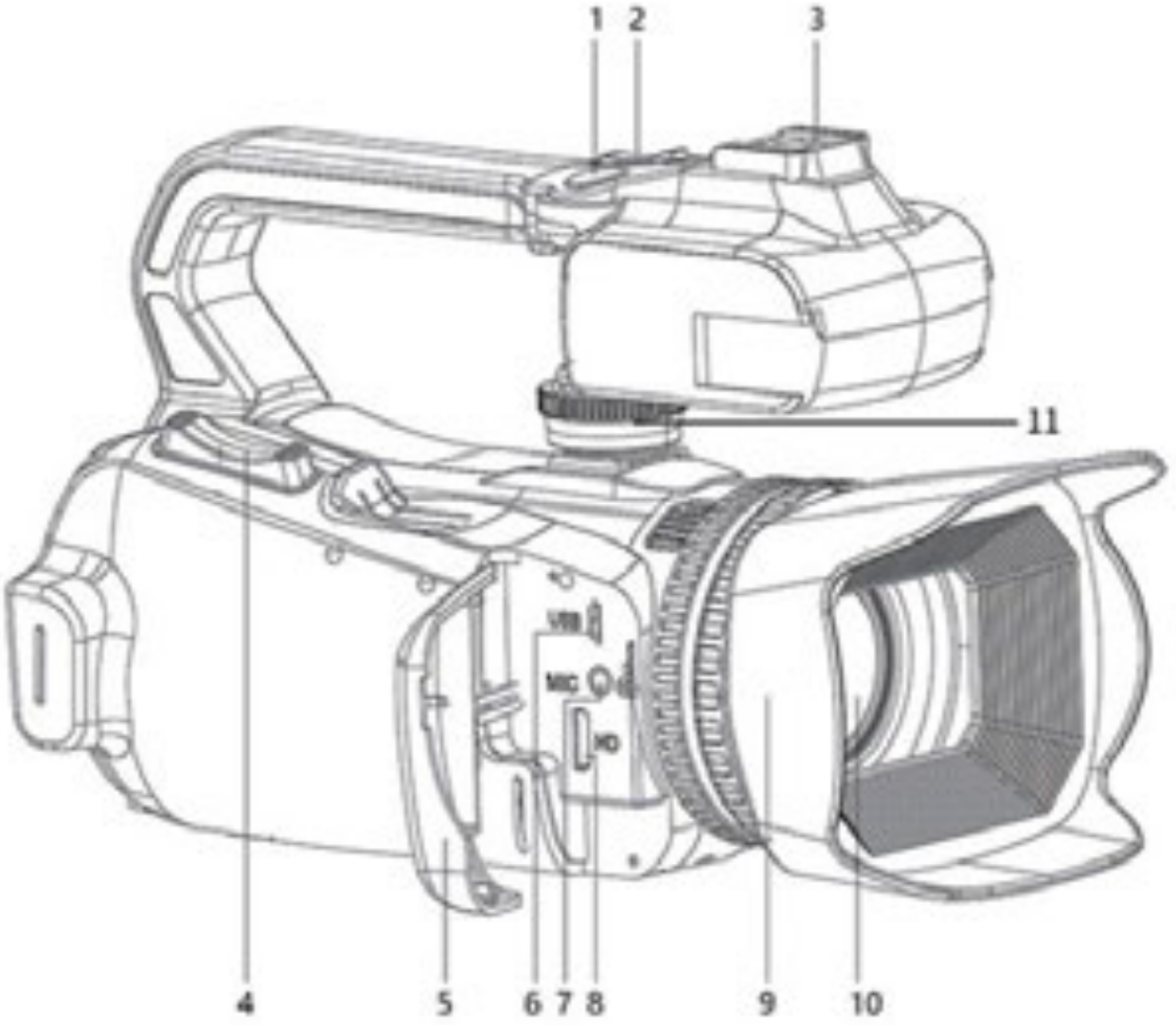

1. Handheld Stabilizer Shutter/Record Button	7. Microphone Port
2. Handheld Stabilizer Zoom Button	8.HDMI Port
3. Handheld Stabilizer Hot Shoe Mount	9. Lens Hood
4. Zoom Buttons	10. Camcorder Lens
5. Jack Door	11. Handheld Stabilizer Screw Lock
6. USB Charging Port	

1.2 Button Function Description

Function	Description
Power	Press and hold for 3 seconds to power on, press and hold for 3 seconds to power off. **In Video and Photo:** Tap once to turn the LED light on and off. **In Menu:** Press to confirm selected setting.
Mode	Tap to enter the mode selection menu.
Menu	Tap to access and exit all menus and submenus.
Zoom	**In Video and Photo:** Press the **+** to zoom-in. Press the **–** to zoom-out. **In Menu:** Press to go to the previous or next setting option. **In Playback:** Press to go to the previous or next video. While playing a video, press and hold to fast forward and rewind.
Shutter	**In Photo:** Half-press to focus the image. Press to capture a photo. **In Video:** Half-press and hold to focus the image while recording.
Record	**In Video:** Tap to start/stop recording video.
OK	**In Menu:** Press to confirm selected setting. **In Playback:** Press to start playing a recorded video, press again to pause.
Left	**In Menu:** Press to navigate menus and submenus. **In Playback:** Press to go to the previous stored file. Press and hold to rewind a playing video.
Right	**In Menu:** Press to navigate menus and submenus. **In Playback:** Press to go to the next stored file. Press and hold to fast forward a playing video.

Up	**In Video and Photo:** Press and hold to activate the Wi-Fi, press again to turn Wi-Fi off. **In Menu:** Press to navigate menus and submenus. **In Playback:** Press to increase playback volume during video playback.
Down	**In Menu:** Press to navigate menus and submenus. **In Playback:** Press to decrease playback volume during video playback.
Display	**In Photo and Video:** Tap to turn off the icons on the screen, tap again to turn the display off, tap a third time to turn on the display with the icons.
LED Light	LED light to aid with vision and recording in darkness.
Tripod Mount	Mount port for attaching to a tripod.
Memory Card Door	Door to cover storage slot for inserting the battery and a memory card.
Lens	Front capture device for all video and photo.

2. First Use

2.1 Inserting the Memory Card

Insert the included SD memory card to record and store your videos and photos. When the battery is low, media stored on the memory card will not be erased. Please insert the SD memory card by following the steps below:

1. Open the LCD screen door to access the memory card door.
2. Open the memory card door by sliding up on the door tab until it is open fully.
3. Insert the memory card. Ensure that the metal contacts are inserted first. Push the memory card down until you hear an audible click.

The memory card can only be inserted in one way. Do not force the card in if it will not go in smoothly.

4. Close the memory card door by sliding it down from the door tab.
5. To remove the memory card, simply push in and the card will eject out.

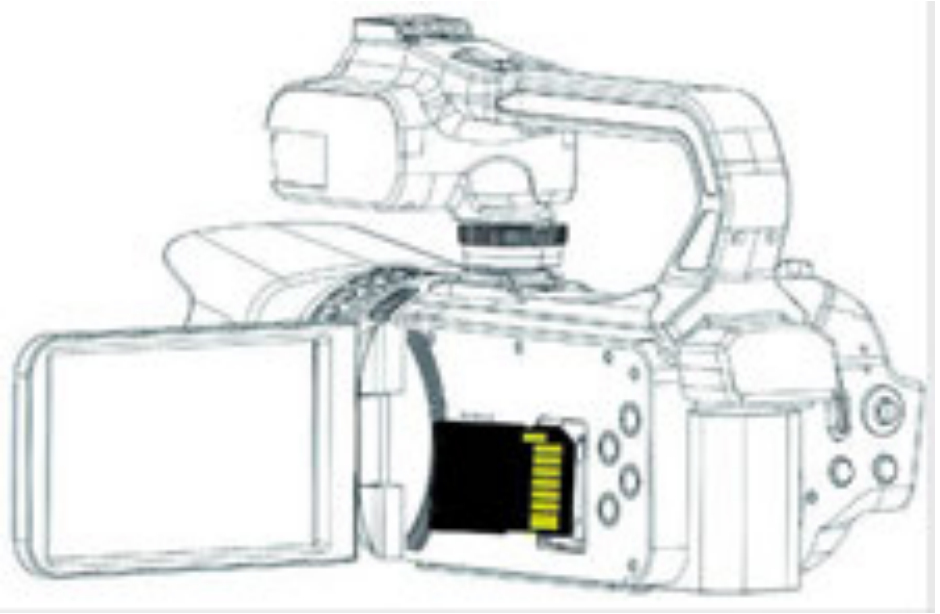

NOTE:

- Please format the memory card before using the camcorder (Caution, this will erase all data on the card).
- Do not remove or insert the memory card when recording. It may damage the card or cause data loss.
- Memory card rating must be Class 10 or above.

2.2 Installing the Battery

Insert the lithium-ion battery into the battery slot at the rear of the camcorder with the metal contacts facing the rear of the camcorder. Take special note of the ridges on the sides of the battery and the on the body of the camcorder, these ridges need to line up to install the battery correctly. The battery can only inserted one way. Mount the battery as shown and push in and up until it locks into place.

To remove the battery, slide the battery lock tab on the bottom of the camcorder in the direction of the arrow. While holding battery lock tab open, slide the battery down and then pull it out away from the rear of the camcorder.

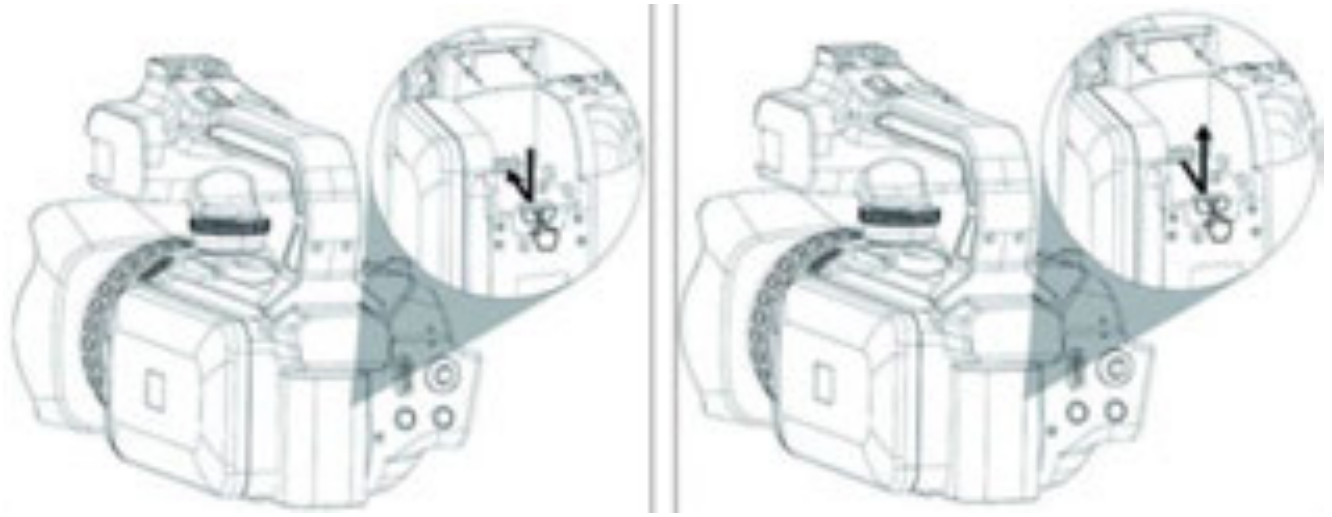

2.3 Charging the Battery

Connect your camcorder to the included AC adaptor with the USB cable provided for charging. Open the jack door on the side of the camcorder to access the charging port. Insert the small end of the USB plug into the camcorder's port, and the larger end into the included AC adaptor. The LED charging indicator light will light up red while charging and will turn off when charging is complete. **Please note: the camcorder can only be charged from the USB port on the side of the camcorder.**

2.4 Powering the Camcorder On/Off

Press and hold the **POWER** button for 3 seconds to power the camcorder on. To power the camcorder off, press and hold the **POWER** button for 3 seconds. The camcorder will automatically power on and off when the screen

is opened or closed. If the camcorder's battery is low, a "Low Power" message will display on the screen and it will automatically shut down within a few seconds to prevent memory corruption or loss.

2.5 Switching Modes

Press the **MODE** button to view the different mode options. Press the **ZOOM**, **UP**, **DOWN**, **LEFT** or **RIGHT** buttons navigate the mode selection page and press the **OK** or **POWER** buttons to enter that mode. The corresponding mode will be displayed in the top left corner of the screen.

2.6 LCD Screen Rotation

Your camcorder's LCD screen can rotate up to 270° of total rotation. See the diagram below for the LCD screen rotation angles.

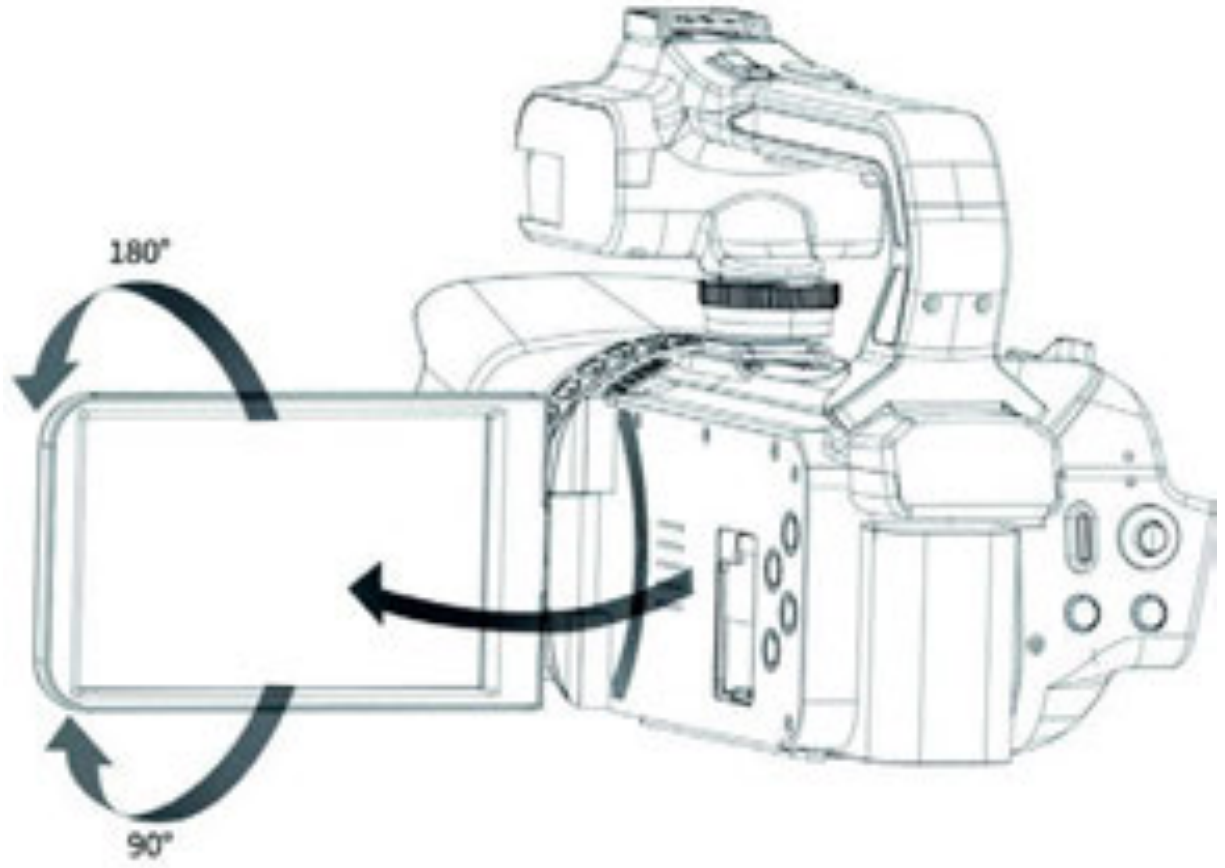

2.7 Connecting to a Computer

Your camcorder can connect to a computer to transfer photo and video files for viewing and editing, or the camcorder can be used as a web cam. To connect the camcorder to your computer, open the jack door on the side of

the camcorder to access the USB port. Insert the small end of the USB plug into the camcorder's port, and the larger end into the USB port on your computer. Once connected and powered on, the camcorder's screen will show three options "Charging Mode" where you can use the camcorder normally while it charges, "Mass Storage Mode" where you can access the files stored on the memory card from your computer and "PC Camera" where the camcorder can be used as a web cam. Use the **UP** or **DOWN** buttons to navigate the menu and press the **OK** or **POWER** buttons to enter your selected mode.

2.8 Connecting to a TV

The camcorder can also be connected to a TV. When connected, the camcorder screen will turn off and the camcorder playback mode will be shown on the TV. Use the TV as the camcorder screen. To connect the camcorder to your TV, open the jack door on the side of the camcorder to access the HDMI port. Insert the small end of the HDMI plug into the camcorder's port, and the larger end into the HDMI port on your TV. Then turn on the camcorder and it will be ready for use.

2.9 Using the Zoom Function

This camcorder has a digital zoom function. To operate the zoom function, press the back of the **ZOOM** button to zoom in closer to the subject, and press the front of the **ZOOM** button to zoom in closer to the subject. The zoom magnification level will be displayed on the LCD screen.

2.10 Using the LED Light

This camcorder has a built-in LED light giving you the ability to capture photos and videos in a dark environment.

In Photo or Video mode, press the **POWER** button once to enable the LED light. To disable the light, press the **POWER** button again.

2.11 Attaching External Accessories

There are a number of external accessories that are included with the camcorder. The types of accessories, their purpose and how they attach to the camcorder can be found below.

2.11.1 Handheld Stabilizer

The handheld stabilizer allows you to capture hard angle shots with ease. The built-in **ZOOM** and **SHUTTER** buttons allow you to record videos and capture images while using the stabilizer. Follow the steps below to mount the handheld stabilizer to the camcorder.

1. Remove the hot shoe tab from the top of the camcorder.
2. Place the stabilizer on the top of the camcorder and align the mounting tab with the hot shoe mount.
3. Slowly slide the stabilizer mounting tab into the hot shoe mount while making sure that the rear of the stabilizer is aligned with the USB port on the back of the camcorder, until you hear an audible click.
4. Rotate the locking screw on the stabilizer, located right above the mounting tab, clockwise until tight. Make sure not to overtighten the screw as this may result in damage.
5. While attached to the camcorder, the **ZOOM** and **SHUTTER** buttons on the stabilizer will work to control video recording and image capture. The controls on the camcorder will also work while the stabilizer is attached.
6. To remove the stabilizer, rotate the locking screw counter clockwise until loose, then press down on the locking tab, located on the camcorder at the back of the stabilizer, and slowly slide the stabilizer off the camcorder until free. Use caution to make sure your finger does not get pinched between the camcorder and stabilizer.

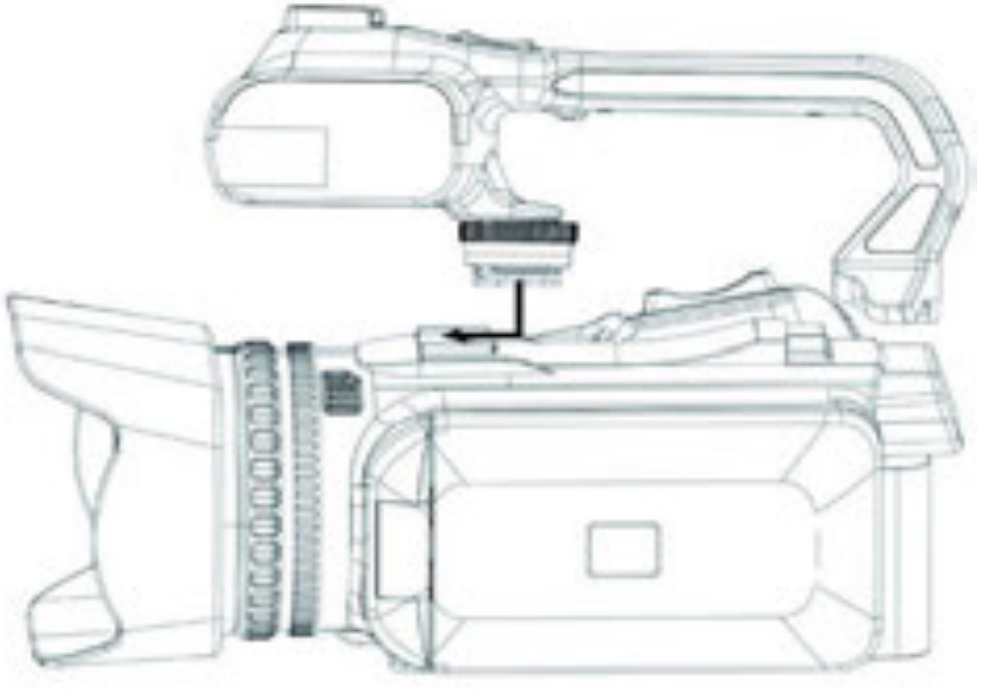

2.11.2 Lens Hood

The lens hood is used to reduce the amount of stray light entering the lens which can create lens flare and reduce contrast. Follow the steps below to attach the lens hood to the camcorder.

1. Align the mounting mark on the lens hood, indicated by the number 1 in the image below, with the lower mounting mark on the camcorder, number 2 in the image below.
2. Slide the lens hood onto the camcorder so that the two mounting marks mentioned in the previous step are touching.
3. Rotate the lens hood in a clockwise direction until the mounting mark on the lens hood, number 1 in the image below, is lined up with the top mounting mark on the camcorder, number 3 in the image below.

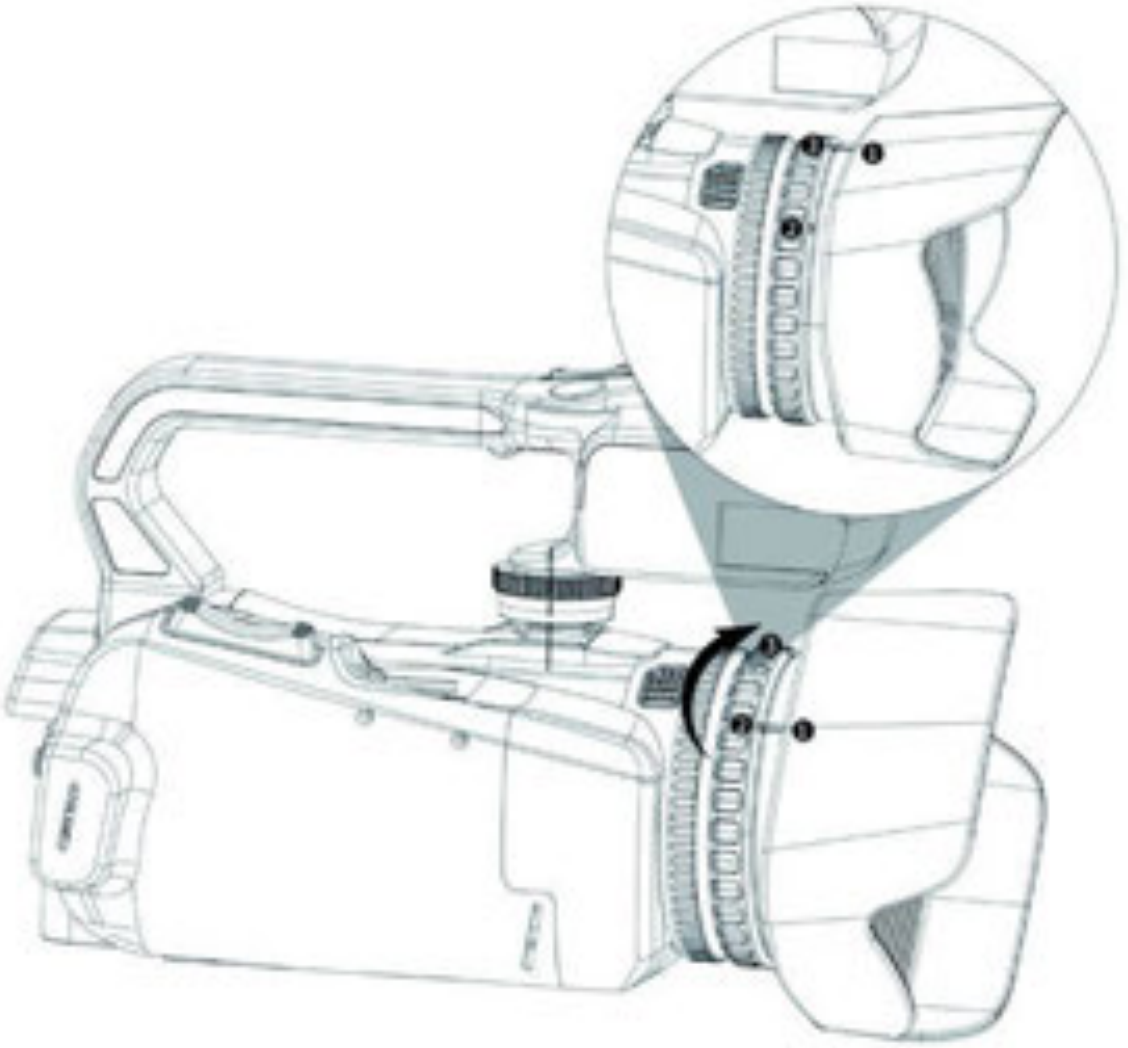

2.11.3 Video LED Light

The video LED Light gives you the ability to capture photos and videos in a dark environment.

To operate the video LED light, simply slide the power switch on the light to the On position, to turn it off, simply slide the power switch to the Off position.

To charge the video LED light, insert the small end of the USB plug into the light's port, and the larger end into the included AC adaptor. The LED charging indicator light will light up red while charging and will turn off when charging is complete.

The video LED light can be attached in a number of locations, it can be attached directly to the camcorder in the hot shoe mount, or it can be attached to any of the three mounting ports on the handheld stabilizer. Follow the steps below to attach the video LED light to the camcorder.

1. Slide the video LED light mounting tab into the mounting position on either the camcorder or the handheld stabilizer.
2. Rotate the locking screw on the video LED light, located right above the mounting tab, clockwise until tight. Make sure not to overtighten the screw as this may result in damage.
3. To remove the video LED light, rotate the locking screw counter clockwise until loose, then slide the video LED light out of the mounting position where it is attached.

2.11.4 Stereo Microphone

The stereo microphone gives you the ability to capture better sound quality than through the camcorder. The microphone includes a foam wind-guard that helps block the sound of the wind.

To operate the stereo microphone, simply slide the power switch on the microphone to the Low position for low sensitivity, or to the High position for high sensitivity, to turn it off, simply slide the power switch to the Off position.

To charge the video Insert the small end of the USB plug into the microphone's port, and the larger end into the included AC adaptor. The LED

charging indicator light will light up red while charging and will turn off when charging is complete.

To attach the wind-guard, simply slide the foam wind-guard onto the microphone. The stereo microphone can be attached in a number of locations, it can be attached directly to the camcorder in the hot shoe mount, or it can be attached to any of the three mounting ports on the handheld stabilizer. Follow the steps below to attach the video LED light to the camcorder.

1. Slide the stereo microphone mounting tab into the mounting position on either the camcorder or the accessories.
2. Rotate the locking screw on the stereo microphone, located right above the mounting tab, clockwise until tight. Make sure not to overtighten the screw as this may result in damage.
3. Plug the cable that is attached to the stereo microphone into the microphone port on the camcorder located under the jack door located on the side of the camcorder.
4. When the microphone is plugged into the camcorder, a “Microphone inserted” message will show briefly on the LCD screen.
5. To remove the stereo microphone, rotate the locking screw counter clockwise until loose, then slide the stereo microphone out of the mounting position where it is attached.

2.12 Remote Control

The included remote control requires a CR2032 button cell battery, which is provided. Before using the remote, make sure to remove the security tab from the battery compartment to allow the battery contacts to properly connect.

In an unobstructed environment, the camcorder can be operated remotely from up to 60 feet away in any direction.

1. LED Light
2. Power
3. Shutter / Photo Capture
4. Record / Video Capture
5. Playback
6. Zoom In
7. Zoom Out
8. Left (In Menu)
9. Up (In Menu)
10. Right (In Menu)
11. Down (In Menu)
12. OK
13. Menu
14. Mode

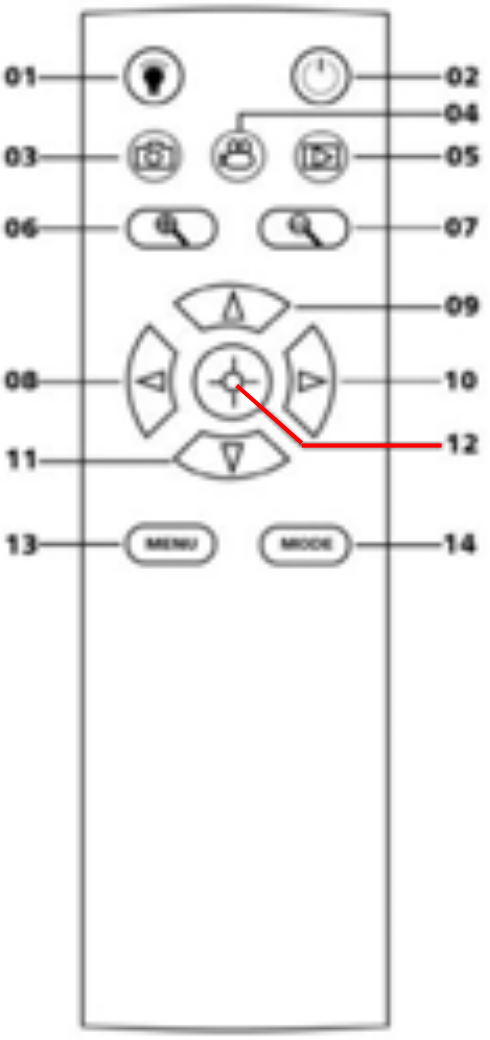

3. Using the Camcorder

3.1 Video Recording

Power the camcorder on and it will be ready to record clips right away. You may press the **MODE** button to access the mode selection menu to switch to another mode. A camcorder icon will appear in the top left corner of the screen when you are in Video mode.

1. Line up your shot by looking at the LCD screen to see what is in view.
2. Hold the camcorder steady and press the **RECORD** button to begin recording.
3. When recording begins, a rolling timer will display in red at the bottom of the screen. This indicates the recorded video time elapsed.
4. Press the **PHOTO** button to pause and resume recording. Press the **RECORD** button to stop recording.
5. When recording scenes further than 12” away, the scene will always be in clear focus. To record scenes between 4”-12” away, press the **RECORD** button to start recording. Half-pressing the **SHUTTER** button without releasing will allow the camcorder to refocus the scene while recording.
6. The recorded video files will automatically save onto the inserted memory card.

3.1.1 Movie Size (Resolution)

Your camcorder has a number of preset resolutions.

1. In Video Mode press the **MENU** button.
2. Select *‘Movie Size’* using the **ZOOM**, **UP** or **DOWN** buttons and press the **OK** or **POWER** buttons to enter the *‘Movie Size’* submenu.
3. Push the **ZOOM**, **UP** or **DOWN** buttons to navigate the menu and press the **OK** or **POWER** buttons to confirm your selected setting *(4K60FPS, 4K30FPS, 2.7K30FPS, 1080P60FPS, 1080P30FPS, 720P120FPS, 720P60FPS, 720P30FPS)*. A higher resolution and faster frames per second rate will produce a higher quality and larger video file.
4. Press the **MODE** button to exit the submenu or press the **MENU** button to exit the settings screen.

3.1.2 White Balance

White Balance changes the color of light in your pictures, making it seem warmer or cooler depending on how the light you're shooting in affects the frame.

1. In Video Mode press the **MENU** button.
2. Select *'White Balance'* using the **ZOOM**, **UP** or **DOWN** buttons and press the **OK** or **POWER** buttons to enter the *'White Balance'* submenu.
3. Push the **ZOOM**, **UP** or **DOWN** to navigate the menu and press the **OK** or **POWER** buttons to confirm your selected setting *(Auto, Sunny, Cloudy, Incandescent, Fluorescent)*.
4. Press the **MODE** button to exit the submenu or press the **MENU** button to exit the settings screen.

3.1.3 Exposure

This function adjusts the frame brightness in your video.

1. In Video Mode press the **MENU** button.
2. Select *'Exposure'* using the **ZOOM**, **UP** or **DOWN** and press the **OK** or **POWER** buttons to enter the *'Exposure'* submenu.
3. Push the **ZOOM**, **UP** or **DOWN** to navigate the menu and press the **OK** or **POWER** buttons to confirm your selected exposure mode *(-3, -2, -1, 0, +1, +2, +3).*
4. Press the **MODE** button to exit the submenu or press the **MENU** button to exit the settings screen.

3.1.4 Metering

Metering mode refers to the way in which a camcorder determines the appropriate exposure (quantity of light reaching the camcorder lens). Spot metering will only base the exposure setting on a very small area of the scene. Center metering will use the light from the center of the LCD and the Multi setting measures the light at several points on the screen.

1. In Video Mode press the **MENU** button.
2. Select *'Metering'* using the **ZOOM**, **UP** or **DOWN** buttons and press the **OK** or **POWER** buttons to enter the *'Metering'* submenu.
3. Push the **ZOOM**, **UP** or **DOWN** buttons to navigate the menu and press the **OK** or **POWER** buttons to confirm your selected exposure mode

(Average, Center, Spot, Matrix).

4. Press the **MODE** button to exit the submenu or press the **MENU** button to exit the settings screen.

3.1.5 Sharpness

This function adjusts the visible detail of a video.

1. In Video Mode press the **MENU** button.
2. Select *'Sharpness'* using the **ZOOM**, **UP** or **DOWN** buttons and press the **OK** or **POWER** buttons to enter the *'Sharpness'* submenu.
3. Push the **ZOOM**, **UP** or **DOWN** to navigate the menu and press the **OK** or **POWER** buttons to confirm your selected setting *(Hard, Normal, Soft)*.
4. Press the **MODE** button to exit the submenu or press the **MENU** button to exit the settings screen.

3.1.6 Video Quality

The Video Quality function determines the level of compression the camcorder uses when saving videos to the memory card.

1. In Video Mode press the **MENU** button.
2. Select *'Video Quality'* using the **ZOOM**, **UP** or **DOWN** buttons and press the **OK** or **POWER** buttons to enter the *'Video Quality'* submenu.
3. Push the **ZOOM**, **UP** or **DOWN** to navigate the menu and press the **OK** or **POWER** buttons to confirm your selected setting *(Super Fine, Fine, Normal)*.
4. Press the **MODE** button to exit the submenu or press the **MENU** button to exit the settings screen.

3.1.7 ISO

This function adjusts the light sensitivity in your video.

1. In Video Mode press the **MENU** button.
2. Select *'ISO'* using the **ZOOM**, **UP** or **DOWN** buttons and press the **OK** or **POWER** buttons to enter the *'ISO'* submenu.
3. Push the **ZOOM**, **UP** or **DOWN** to navigate the menu and press the **OK** or **POWER** buttons to confirm your selected setting *(Auto, 100, 200, 400, 800, 1600, 3200, 6400)*.
4. Press the **MODE** button to exit the submenu or press the **MENU** button to

exit the settings screen.

3.1.8 Time Stamp

This setting allows you to imprint a date & time onto your captured image files. Once an image file is captured with the imprint, the imprint cannot be removed.

1. In Video Mode press the **MENU** button.
2. Select *'Time Stamp'* using the **ZOOM**, **UP** or **DOWN** buttons.
3. Press the **OK** or **POWER** buttons to turn *'Time Stamp'* on or off. When the word 'On' with a check mark is displayed, the feature is on, when the word 'Off' without a check mark is displayed, the feature is off.
4. Press the **MENU** button to exit the settings screen.

3.1.9 Record Audio

This function allows you to turn audio recording in video and loop recording modes on and off. If this setting is set to off, any videos recorded in video and loop recording modes will not have any audio.

1. In Video Mode press the **MENU** button.
2. Select *'Record Audio'* using the **ZOOM**, **UP** or **DOWN** buttons.
3. Press the **OK** or **POWER** buttons to turn *'Record Audio'* on or off. When the word 'On' with a check mark is displayed, the feature is on, when the word 'Off' without a check mark is displayed, the feature is off.
4. Press the **MENU** button to exit the settings screen.

3.1.10 Motion Detection

This setting automatically begins recording if movement is detected in front of the camcorder lens. Once recording, the camcorder will stop recording if no further movement is detected within a 30-second period of the last movement registered. You may also manually stop recording anytime by pressing the **RECORD** button during a recording or pause the recording by pressing the **PHOTO** button. If the recording is stopped manually, then the Motion Detection feature will be turned off and will need to be reactivated.

1. In Video Mode press the **MENU** button.
2. Select *'Motion Detection'* using the **ZOOM**, **UP** or **DOWN** buttons and press the **OK** or **POWER** buttons to enter the *'Motion Detection'* submenu.

3. Push the **ZOOM**, **UP** or **DOWN** to navigate the menu and press the **OK** or **POWER** buttons to confirm your selected setting *(Off, Low, Medium, High)*.
4. Press the **MODE** button to exit the submenu or press the **MENU** button to exit the settings screen.

Alternatively, your camcorder's menus can be navigated via the touch screen. Press the 'MENU' icon in the bottom right corner of the touch screen to change chosen settings.

3.2 Slow Motion Recording

Videos recorded in slow motion are recorded at a much higher frames per second and when played back, the videos show movement at a much slower rate.

To switch to Slow Motion mode power the camera on and press the **MODE** button, then using the **LEFT** or **RIGHT** buttons, select Slow Motion and press the **OK** or **POWER** buttons to enter Slow Motion mode. A camcorder icon will appear in the top left corner of the screen when you are in Slow Motion mode.

1. Line up your shot by looking at the LCD screen to see what is in view.
2. Hold the camcorder steady and press the **RECORD** button to begin recording.
3. When recording begins, a rolling timer will display in red at the bottom of the screen. This indicates the recorded video time elapsed.
4. Press the **PHOTO** button to pause and resume recording. Press the **RECORD** button to stop recording.
5. When recording scenes further than 12” away, the scene will always be in clear focus. To record scenes between 4”-12” away, press the **RECORD** button to start recording. Half-pressing the **SHUTTER** button without releasing will allow the camcorder to refocus the scene while recording.
6. The recorded video files will automatically save onto the inserted memory card.

3.2.1 Slow Motion Rate

This function allows you to set the rate that the video is recorded in. If you choose 1080P 4X, your video will playback at ¼ speed and if you choose 1080P 2X, then your video will playback at ½ speed.

1. In Slow Motion Mode press the **MENU** button.
2. Select *‘Slow Motion Rate’* using the **ZOOM**, **UP** or **DOWN** buttons and press the **OK** or **POWER** buttons to enter the *‘Slow Motion Rate’* submenu.
3. Push the **ZOOM**, **UP** or **DOWN** buttons to navigate the menu and press the **OK** or **POWER** buttons to confirm your selected setting *(1080P 4X,*

1080P 2X, 720P 8X, 720P 4X).

4. Press the **MODE** button to exit the submenu or press the **MENU** button to exit the settings screen.

3.2.2 White Balance

White Balance changes the color of light in your pictures, making it seem warmer or cooler depending on how the light you're shooting in affects the frame.

1. In Slow Motion Mode press the **MENU** button.
2. Select *'White Balance'* using the **ZOOM**, **UP** or **DOWN** buttons and press the **OK** or **POWER** buttons to enter the *'White Balance'* submenu.
3. Push the **ZOOM**, **UP** or **DOWN** to navigate the menu and press the **OK** or **POWER** buttons to confirm your selected setting *(Auto, Sunny, Cloudy, Incandescent, Fluorescent)*.
4. Press the **MODE** button to exit the submenu or press the **MENU** button to exit the settings screen.

3.2.3 Exposure

This function adjusts the frame brightness in your video.

1. In Slow Motion Mode press the **MENU** button.
2. Select *'Exposure'* using the **ZOOM**, **UP** or **DOWN** and press the **OK** or **POWER** buttons to enter the *'Exposure'* submenu.
3. Push the **ZOOM**, **UP** or **DOWN** to navigate the menu and press the **OK** or **POWER** buttons to confirm your selected exposure mode *(-3, -2, -1, 0, +1, +2, +3).*
4. Press the **MODE** button to exit the submenu or press the **MENU** button to exit the settings screen.

3.2.4 Metering

Metering mode refers to the way in which a camcorder determines the appropriate exposure (quantity of light reaching the camcorder lens). Spot metering will only base the exposure setting on a very small area of the scene. Center metering will use the light from the center of the LCD and the Multi setting measures the light at several points on the screen.

1. In Slow Motion Mode press the **MENU** button.
2. Select *'Metering'* using the **ZOOM**, **UP** or **DOWN** buttons and press the **OK** or **POWER** buttons to enter the *'Metering'* submenu.
3. Push the **ZOOM**, **UP** or **DOWN** buttons to navigate the menu and press the **OK** or **POWER** buttons to confirm your selected exposure mode *(Average, Center, Spot, Matrix)*.
4. Press the **MODE** button to exit the submenu or press the **MENU** button to exit the settings screen.

3.2.5 Sharpness

This function adjusts the visible detail of a video.

1. In Slow Motion Mode press the **MENU** button.
2. Select *'Sharpness'* using the **ZOOM**, **UP** or **DOWN** buttons and press the **OK** or **POWER** buttons to enter the *'Sharpness'* submenu.
3. Push the **ZOOM**, **UP** or **DOWN** to navigate the menu and press the **OK** or **POWER** buttons to confirm your selected setting *(Hard, Normal, Soft)*.
4. Press the **MODE** button to exit the submenu or press the **MENU** button to exit the settings screen.

3.2.6 Video Quality

The Video Quality function determines the level of compression the camcorder uses when saving videos to the memory card.

1. In Slow Motion Mode press the **MENU** button.
2. Select *'Video Quality'* using the **ZOOM**, **UP** or **DOWN** buttons and press the **OK** or **POWER** buttons to enter the *'Video Quality'* submenu.
3. Push the **ZOOM**, **UP** or **DOWN** to navigate the menu and press the **OK** or **POWER** buttons to confirm your selected setting *(Super Fine, Fine, Normal)*.
4. Press the **MODE** button to exit the submenu or press the **MENU** button to exit the settings screen.

3.2.7 Motion Detection

This setting automatically begins recording if movement is detected in front of the camcorder lens. Once recording, the camcorder will stop recording if no

further movement is detected within a 30-second period of the last movement registered. You may also manually stop recording anytime by pressing the **RECORD** button during a recording or pause the recording by pressing the **PHOTO** button. If the recording is stopped manually, then the Motion Detection feature will be turned off and will need to be reactivated.

1. In Slow Motion Mode press the **MENU** button.
2. Select *'Motion Detection'* using the **ZOOM**, **UP** or **DOWN** buttons and press the **OK** or **POWER** buttons to enter the *'Motion Detection'* submenu.
3. Push the **ZOOM**, **UP** or **DOWN** to navigate the menu and press the **OK** or **POWER** buttons to confirm your selected setting *(Off, Low, Medium, High)*.
4. Press the **MODE** button to exit the submenu or press the **MENU** button to exit the settings screen.

Alternatively, your camcorder's menus can be navigated via the touch screen. Press the 'MENU' icon in the bottom right corner of the touch screen to change chosen settings.

3.3 Loop Recording

This function allows you to set a maximum duration for each video clip recorded.

To switch to Loop Recording mode power the camera on and press the **MODE** button, then using the **LEFT** or **RIGHT** buttons, select Slow Motion and press the **OK** or **POWER** buttons to enter Slow Motion mode. A camcorder icon will appear in the top left corner of the screen when you are in Slow Motion mode.

1. Line up your shot by looking at the LCD screen to see what is in view.
2. Hold the camcorder steady and press the **RECORD** button to begin recording.
3. When recording begins, a rolling timer will display in red at the bottom of the screen. This indicates the recorded video time elapsed.
4. Press the **PHOTO** button to pause and resume recording. Press the **RECORD** button to stop recording.
5. When recording scenes further than 12” away, the scene will always be in clear focus. To record scenes between 4”-12” away, press the **RECORD** button to start recording. Half-pressing the **SHUTTER** button without releasing will allow the camcorder to refocus the scene while recording.
6. The recorded video files will automatically save onto the inserted memory card.

3.3.1 Movie Size (Resolution)

Your camcorder has a number of preset resolutions.

1. In Loop Recording Mode press the **MENU** button.
2. Select *‘Movie Size’* using the **ZOOM**, **UP** or **DOWN** buttons and press the **OK** or **POWER** buttons to enter the *‘Movie Size’* submenu.
3. Push the **ZOOM**, **UP** or **DOWN** buttons to navigate the menu and press the **OK** or **POWER** buttons to confirm your selected setting *(4K60FPS, 4K30FPS, 2.7K30FPS, 1080P60FPS, 1080P30FPS, 720P120FPS, 720P60FPS, 720P30FPS)*. A higher resolution and faster frames per second rate will produce a higher quality and larger video file.

4. Press the **MODE** button to exit the submenu or press the **MENU** button to exit the settings screen.

3.3.2 Loop Duration

This function allows you to set a maximum duration for each video clip recorded.

1. In Loop Recording Mode press the **MENU** button.
2. Select *'Loop Duration'* using the **ZOOM**, **UP** or **DOWN** buttons and press the **OK** or **POWER** buttons to enter the *'Loop Duration'* submenu.
3. Push the **ZOOM**, **UP** or **DOWN** to navigate the menu and press the **OK** or **POWER** buttons to confirm your selected setting *(2 Minutes, 3 Minutes, 5 Minutes)*.
4. Press the **MODE** button to exit the submenu or press the **MENU** button to exit the settings screen.

3.3.3 White Balance

White Balance changes the color of light in your pictures, making it seem warmer or cooler depending on how the light you're shooting in affects the frame.

1. In Loop Recording Mode press the **MENU** button.
2. Select *'White Balance'* using the **ZOOM**, **UP** or **DOWN** buttons and press the **OK** or **POWER** buttons to enter the *'White Balance'* submenu.
3. Push the **ZOOM**, **UP** or **DOWN** to navigate the menu and press the **OK** or **POWER** buttons to confirm your selected setting *(Auto, Sunny, Cloudy, Incandescent, Fluorescent)*.
4. Press the **MODE** button to exit the submenu or press the **MENU** button to exit the settings screen.

3.3.4 Exposure

This function adjusts the frame brightness in your video.

1. In Loop Recording Mode press the **MENU** button.
2. Select *'Exposure'* using the **ZOOM**, **UP** or **DOWN** and press the **OK** or **POWER** buttons to enter the *'Exposure'* submenu.
3. Push the **ZOOM**, **UP** or **DOWN** to navigate the menu and press the **OK** or

POWER buttons to confirm your selected exposure mode *(-3, -2, -1, 0, +1, +2, +3).*

4. Press the **MODE** button to exit the submenu or press the **MENU** button to exit the settings screen.

3.3.5 Metering

Metering mode refers to the way in which a camcorder determines the appropriate exposure (quantity of light reaching the camcorder lens). Spot metering will only base the exposure setting on a very small area of the scene. Center metering will use the light from the center of the LCD and the Multi setting measures the light at several points on the screen.

1. In Loop Recording Mode press the **MENU** button.
2. Select *'Metering'* using the **ZOOM**, **UP** or **DOWN** buttons and press the **OK** or **POWER** buttons to enter the *'Metering'* submenu.
3. Push the **ZOOM**, **UP** or **DOWN** buttons to navigate the menu and press the **OK** or **POWER** buttons to confirm your selected exposure mode *(Average, Center, Spot, Matrix)*.
4. Press the **MODE** button to exit the submenu or press the **MENU** button to exit the settings screen.

3.3.6 Sharpness

This function adjusts the visible detail of a video.

1. In Loop Recording Mode press the **MENU** button.
2. Select *'Sharpness'* using the **ZOOM**, **UP** or **DOWN** buttons and press the **OK** or **POWER** buttons to enter the *'Sharpness'* submenu.
3. Push the **ZOOM**, **UP** or **DOWN** to navigate the menu and press the **OK** or **POWER** to confirm your selected setting *(Hard, Normal, Soft)*.
4. Press the **MODE** button to exit the submenu or press the **MENU** button to exit the settings screen.

3.3.7 Video Quality

The Video Quality function determines the level of compression the camcorder uses when saving videos to the memory card.

1. In Loop Recording Mode press the **MENU** button.

2. Select *'Video Quality'* using the **ZOOM**, **UP** or **DOWN** buttons and press the **OK** or **POWER** buttons to enter the *'Video Quality'* submenu.
3. Push the **ZOOM**, **UP** or **DOWN** to navigate the menu and press the **OK** or **POWER** buttons to confirm your selected setting *(Super Fine, Fine, Normal)*.
4. Press the **MODE** button to exit the submenu or press the **MENU** button to exit the settings screen.

3.3.8 ISO

This function adjusts the light sensitivity in your video.

1. In Loop Recording Mode press the **MENU** button.
2. Select *'ISO'* using the **ZOOM**, **UP** or **DOWN** buttons and press the **OK** or **POWER** buttons to enter the *'ISO'* submenu.
3. Push the **ZOOM**, **UP** or **DOWN** to navigate the menu and press the **OK** or **POWER** buttons to confirm your selected setting *(Auto, 100, 200, 400, 800, 1600, 3200, 6400)*.
4. Press the **MODE** button to exit the submenu or press the **MENU** button to exit the settings screen.

3.3.9 Time Stamp

This setting allows you to imprint a date & time onto your captured image files. Once an image file is captured with the imprint, the imprint cannot be removed.

1. In Loop Recording Mode press the **MENU** button.
2. Select *'Time Stamp'* using the **ZOOM**, **UP** or **DOWN** buttons.
3. Press the **OK** or **POWER** buttons to turn *'Time Stamp'* on or off. When the word 'On' with a check mark is displayed, the feature is on, when the word 'Off' without a check mark is displayed, the feature is off.
4. Press the **MENU** button to exit the settings screen.

3.3.10 Record Audio

This function allows you to turn audio recording in video and loop recording modes on and off. If this setting is set to off, any videos recorded in video and loop recording modes will not have any audio.

1. In Loop Recording Mode press the **MENU** button.
2. Select *'Record Audio'* using the **ZOOM**, **UP** or **DOWN** buttons.
3. Press the **OK** or **POWER** buttons to turn *'Record Audio'* on or off. When the word 'On' with a check mark is displayed, the feature is on, when the word 'Off' without a check mark is displayed, the feature is off.
4. Press the **MENU** button to exit the settings screen.

3.3.11 Motion Detection

This setting automatically begins recording if movement is detected in front of the camcorder lens. Once recording, the camcorder will stop recording if no further movement is detected within a 30-second period of the last movement registered. You may also manually stop recording anytime by pressing the **RECORD** button during a recording or pause the recording by pressing the **PHOTO** button. If the recording is stopped manually, then the Motion Detection feature will be turned off and will need to be reactivated.

1. In Loop Recording Mode press the **MENU** button.
2. Select *'Motion Detection'* using the **ZOOM**, **UP** or **DOWN** buttons and press the **OK** or **POWER** buttons to enter the *'Motion Detection'* submenu.
3. Push the **ZOOM**, **UP** or **DOWN** to navigate the menu and press the **OK** or **POWER** buttons to confirm your selected setting *(Off, Low, Medium, High)*.
4. Press the **MODE** button to exit the submenu or press the **MENU** button to exit the settings screen.

Alternatively, your camcorder's menus can be navigated via the touch screen. Press the 'MENU' icon in the bottom right corner of the touch screen to change chosen settings.

3.4 Time Lapse Recording

This feature allows you to capture long sequences of events in a much shorter time period.

To switch to Time Lapse mode power the camera on and press the **MODE** button, then using the **LEFT** or **RIGHT** buttons, select Slow Motion and press the **OK** or **POWER** buttons to enter Slow Motion mode. A camcorder icon will appear in the top left corner of the screen when you are in Slow Motion mode.

1. Line up your shot by looking at the LCD screen to see what is in view.
2. Hold the camcorder steady and press the **RECORD** button to begin recording.
3. When recording begins, a rolling timer will display in red at the bottom of the screen. This indicates the recorded video time elapsed.
4. Press the **PHOTO** button to pause and resume recording. Press the **RECORD** button to stop recording.
5. When recording scenes further than 12” away, the scene will always be in clear focus. To record scenes between 4”-12” away, press the **RECORD** button to start recording. Half-pressing the **SHUTTER** button without releasing will allow the camcorder to refocus the scene while recording.
6. The recorded video files will automatically save onto the inserted memory card.

3.4.1 Movie Size (Resolution)

Your camcorder has a number of preset resolutions.

1. In Time Lapse Mode press the **MENU** button.
2. Select *‘Movie Size’* using the **ZOOM**, **UP** or **DOWN** buttons and press the **OK** or **POWER** buttons to enter the *‘Movie Size’* submenu.
3. Push the **ZOOM**, **UP** or **DOWN** buttons to navigate the menu and press the **OK** or **POWER** buttons to confirm your selected setting *(4K, 2.7K, 1080P, 720P)*. A higher resolution and faster frames per second rate will produce a higher quality and larger video file.
4. Press the **MODE** button to exit the submenu or press the **MENU** button to exit the settings screen.

3.4.2 Interval Duration

This function allows you to set the amount of time in between images.

1. In Time Lapse Mode press the **MENU** button.
2. Select *'Interval Duration'* using the **ZOOM**, **UP** or **DOWN** buttons and press the **OK** or **POWER** buttons to enter the *'Interval Duration'* submenu.
3. Push the **ZOOM**, **UP** or **DOWN** to navigate the menu and press the **OK** or **POWER** buttons to confirm your selected setting *(0.5 Seconds, 1 Second, 2 Seconds, 5 Seconds, 10 Seconds, 30 Seconds, 60 Seconds)*.
4. Press the **MODE** button to exit the submenu or press the **MENU** button to exit the settings screen.

NOTE: By selecting '10 Seconds' the camera will capture a single frame every 10 seconds and create a video combining all of the captured images. See the table below for how long it will take to record 1 second of video for each option;

Interval Duration Option	Length of time to record 1 second of video
0.5 Seconds	15 Seconds
1 Second	30 Seconds
2 Seconds	60 Seconds
5 Seconds	150 Seconds
10 Seconds	300 Seconds
30 Seconds	900 Seconds
60 Seconds	1,800 Seconds

3.4.3 White Balance

White Balance changes the color of light in your pictures, making it seem warmer or cooler depending on how the light you're shooting in affects the frame.

1. In Time Lapse Mode press the **MENU** button.
2. Select *'White Balance'* using the **ZOOM**, **UP** or **DOWN** buttons and press the **OK** or **POWER** buttons to enter the *'White Balance'* submenu.
3. Push the **ZOOM**, **UP** or **DOWN** to navigate the menu and press the **OK** or **POWER** buttons to confirm your selected setting *(Auto, Sunny, Cloudy, Incandescent, Fluorescent)*.

4. Press the **MODE** button to exit the submenu or press the **MENU** button to exit the settings screen.

3.4.4 Exposure

This function adjusts the frame brightness in your video.

1. In Time Lapse Mode press the **MENU** button.
2. Select *'Exposure'* using the **ZOOM**, **UP** or **DOWN** and press the **OK** or **POWER** buttons to enter the *'Exposure'* submenu.
3. Push the **ZOOM**, **UP** or **DOWN** to navigate the menu and press the **OK** or **POWER** buttons to confirm your selected exposure mode *(-3, -2, -1, 0, +1, +2, +3).*
4. Press the **MODE** button to exit the submenu or press the **MENU** button to exit the settings screen.

3.4.5 Video Length

This function allows you to set the length of the final time lapse video.

1. In Time Lapse Mode press the **MENU** button.
2. Select *'Video Length'* using the **ZOOM**, **UP** or **DOWN** and press the **OK** or **POWER** buttons to enter the *'Video Length'* submenu.
3. Push the **ZOOM**, **UP** or **DOWN** to navigate the menu and press the **OK** or **POWER** buttons to confirm your selected exposure mode *(Unlimited, 6 Seconds, 8 Seconds, 10 Seconds, 20 Seconds, 30 Seconds, 60 Seconds, 120 Seconds).*
4. Press the **MODE** button to exit the submenu or press the **MENU** button to exit the settings screen.

NOTE: By selecting '10 Seconds' the time lapse will automatically stop recording when the final video is 10 seconds long. The actual length of time that it will take to record the 10 second video will depend on the interval duration, see section 3.4.2.

3.4.6 Metering

Metering mode refers to the way in which a camcorder determines the appropriate exposure (quantity of light reaching the camcorder lens). Spot metering will only base the exposure setting on a very small area of the

scene. Center metering will use the light from the center of the LCD and the Multi setting measures the light at several points on the screen.

1. In Time Lapse Mode press the **MENU** button.
2. Select *'Metering'* using the **ZOOM**, **UP** or **DOWN** buttons and press the **OK** or **POWER** buttons to enter the *'Metering'* submenu.
3. Push the **ZOOM**, **UP** or **DOWN** buttons to navigate the menu and press the **OK** or **POWER** buttons to confirm your selected exposure mode *(Average, Center, Spot, Matrix)*.
4. Press the **MODE** button to exit the submenu or press the **MENU** button to exit the settings screen.

3.4.7 Sharpness

This function adjusts the visible detail of a video.

1. In Time Lapse Mode press the **MENU** button.
2. Select *'Sharpness'* using the **ZOOM**, **UP** or **DOWN** buttons and press the **OK** or **POWER** buttons to enter the *'Sharpness'* submenu.
3. Push the **ZOOM**, **UP** or **DOWN** to navigate the menu and press the **OK** or **POWER** buttons to confirm your selected setting *(Hard, Normal, Soft)*.
4. Press the **MODE** button to exit the submenu or press the **MENU** button to exit the settings screen.

3.4.8 Video Quality

The Video Quality function determines the level of compression the camcorder uses when saving videos to the memory card.

1. In Time Lapse Mode press the **MENU** button.
2. Select *'Video Quality'* using the **ZOOM**, **UP** or **DOWN** buttons and press the **OK** or **POWER** buttons to enter the *'Video Quality'* submenu.
3. Push the **ZOOM**, **UP** or **DOWN** to navigate the menu and press the **OK** or **POWER** buttons to confirm your selected setting *(Super Fine, Fine, Normal)*.
4. Press the **MODE** button to exit the submenu or press the **MENU** button to exit the settings screen.

3.4.9 ISO

This function adjusts the light sensitivity in your video.

1. In Time Lapse Mode press the **MENU** button.
2. Select *'ISO'* using the **ZOOM**, **UP** or **DOWN** buttons and press the **OK** or **POWER** buttons to enter the *'ISO'* submenu.
3. Push the **ZOOM**, **UP** or **DOWN** to navigate the menu and press the **OK** or **POWER** buttons to confirm your selected setting *(Auto, 100, 200, 400, 800, 1600, 3200, 6400)*.
4. Press the **MODE** button to exit the submenu or press the **MENU** button to exit the settings screen.

3.4.10 Motion Detection

This setting automatically begins recording if movement is detected in front of the camcorder lens. Once recording, the camcorder will stop recording if no further movement is detected within a 30-second period of the last movement registered. You may also manually stop recording anytime by pressing the **RECORD** button during a recording or pause the recording by pressing the **PHOTO** button. If the recording is stopped manually, then the Motion Detection feature will be turned off and will need to be reactivated.

1. In Time Lapse Mode press the **MENU** button.
2. Select *'Motion Detection'* using the **ZOOM**, **UP** or **DOWN** buttons and press the **OK** or **POWER** buttons to enter the *'Motion Detection'* submenu.
3. Push the **ZOOM**, **UP** or **DOWN** to navigate the menu and press the **OK** or **POWER** buttons to confirm your selected setting *(Off, Low, Medium, High)*.
4. Press the **MODE** button to exit the submenu or press the **MENU** button to exit the settings screen.

Alternatively, your camcorder's menus can be navigated via the touch screen. Press the 'MENU' icon in the bottom right corner of the touch screen to change chosen settings.

3.5 Photo Shooting

Power the camcorder on and press the **MODE** button to enter the mode selection screen. Then press the **LEFT** or **RIGHT** buttons to select Photo mode and press the **OK** or **POWER** buttons to enter that mode. You can also press the mode icon on the right side of the LCD screen to switch to Photo mode.

1. Line up your shot by looking at the LCD screen to see what is in the shot.
2. When shooting at close range (4”-12”), or when switching between far and close scenes, half-press the **SHUTTER** button to refocus the lens on your target. When the red box outline turns green, the target surrounded by the box will now be in focus. Now fully press the **SHUTTER** button to capture a photo.
3. The number of photos that can be captured at the current resolution will be displayed at the bottom of the screen.
4. The number of remaining photos is determined by the selected photo resolution. The higher the photo resolution, the lower the number of photos you are able to be save to the memory card. Before capturing any photos, you can select a preferred photo resolution.

3.5.1 Photo Size (Resolution)

Your camcorder has a number of preset resolutions.

1. In Photo Mode press the **MENU** button.
2. Select *‘Photo Size’* using the **ZOOM**, **UP** or **DOWN** buttons and press the **OK** or **POWER** buttons to enter the *‘Photo Size’* submenu.
3. Push the **ZOOM**, **UP** or **DOWN** to navigate the menu and press the **OK** or **POWER** buttons to confirm your selected setting *(64MP, 56MP, 48MP, 30MP, 24MP, 20MP, 12MP, 8MP)*.
4. Press the **MODE** button to exit the submenu or press the **MENU** button to exit the settings screen.

3.5.2 White Balance

White Balance changes the color of light in your pictures, making it seem warmer or cooler depending on how the light you're shooting in affects the frame.

1. In Photo Mode press the **MENU** button.
2. Select *'White Balance'* using the **ZOOM**, **UP** or **DOWN** buttons and press the **OK** or **POWER** buttons to enter the *'White Balance'* submenu.
3. Push the **ZOOM**, **UP** or **DOWN** to navigate the menu and press the **OK** or **POWER** buttons to confirm your selected setting *(Auto, Sunny, Cloudy, Incandescent, Fluorescent)*.
4. Press the **MODE** button to exit the submenu or press the **MENU** button to exit the settings screen.

3.5.3 Exposure

This function adjusts the frame brightness in your video.

1. In Photo Mode press the **MENU** button.
2. Select *'Exposure'* using the **ZOOM**, **UP** or **DOWN** and press the **OK** or **POWER** buttons to enter the *'Exposure'* submenu.
3. Push the **ZOOM**, **UP** or **DOWN** to navigate the menu and press the **OK** or **POWER** buttons to confirm your selected exposure mode *(-3, -2, -1, 0, +1, +2, +3).*
4. Press the **MODE** button to exit the submenu or press the **MENU** button to exit the settings screen.

3.5.4 Metering

Metering mode refers to the way in which a camcorder determines the appropriate exposure (quantity of light reaching the camcorder lens). Spot metering will only base the exposure setting on a very small area of the scene. Center metering will use the light from the center of the LCD and the Multi setting measures the light at several points on the screen.

1. In Photo Mode press the **MENU** button.
2. Select *'Metering'* using the **ZOOM**, **UP** or **DOWN** buttons and press the **OK** or **POWER** buttons to enter the *'Metering'* submenu.
3. Push the **ZOOM**, **UP** or **DOWN** buttons to navigate the menu and press the **OK** or **POWER** buttons to confirm your selected exposure mode *(Average, Center, Spot, Matrix)*.
4. Press the **MODE** button to exit the submenu or press the **MENU** button to exit the settings screen.

3.5.5 Sharpness

This function adjusts the visible detail of a video.

1. In Photo Mode press the **MENU** button.
2. Select *'Sharpness'* using the **ZOOM**, **UP** or **DOWN** buttons and press the **OK** or **POWER** buttons to enter the *'Sharpness'* submenu.
3. Push the **ZOOM**, **UP** or **DOWN** to navigate the menu and press the **OK** or **POWER** buttons to confirm your selected setting *(Hard, Normal, Soft)*.
4. Press the **MODE** button to exit the submenu or press the **MENU** button to exit the settings screen.

3.5.6 Long Exposure

This function allows you to set the amount of time that the camcorder 's shutter is left open. The resulting image captures the trail of moving objects in front of the camcorder, while showing still elements razor sharp.

1. In Photo Mode press the **MENU** button.
2. Select *'Long Exposure'* using the **ZOOM**, **UP** or **DOWN** buttons and press the **OK** or **POWER** buttons to enter the *'Long Exposure'* submenu.
3. Push the **ZOOM**, **UP** or **DOWN** to navigate the menu and press the **OK** or **POWER** buttons to confirm your selected setting *(Auto, 2 Seconds, 5 Seconds, 10 Seconds, 15 Seconds, 20 Seconds, 30 Seconds)*.
4. Press the **MODE** button to exit the submenu or press the **MENU** button to exit the settings screen.

3.5.7 ISO

This function adjusts the light sensitivity in your video.

1. In Photo Mode press the **MENU** button.
2. Select *'ISO'* using the **ZOOM**, **UP** or **DOWN** buttons and press the **OK** or **POWER** buttons to enter the *'ISO'* submenu.
3. Push the **ZOOM**, **UP** or **DOWN** to navigate the menu and press the **OK** or **POWER** buttons to confirm your selected setting *(Auto, 100, 200, 400, 800, 1600, 3200, 6400)*.
4. Press the **MODE** button to exit the submenu or press the **MENU** button to exit the settings screen.

3.5.8 Time Stamp

This setting allows you to imprint a date & time onto your captured image files. Once an image file is captured with the imprint, the imprint cannot be removed.

1. In Photo Mode press the **MENU** button.
2. Select *'Time Stamp'* using the **ZOOM**, **UP** or **DOWN** buttons.
3. Press the **OK** or **POWER** buttons to turn *'Time Stamp'* on or off. When the word 'On' with a check mark is displayed, the feature is on, when the word 'Off' without a check mark is displayed, the feature is off.
4. Press the **MENU** button to exit the settings screen.

Alternatively, your camcorder's menus can be navigated via the touch screen. Press the 'MENU' icon in the bottom right corner of the touch screen to change chosen settings.

3.6 Interval Photo

In the interval photo mode, the camera will take a single photo at a set interval until stopped.

Power the camcorder on and press the **MODE** button to enter the mode selection screen. Then press the **LEFT** or **RIGHT** buttons to select Interval Photo mode and press the **OK** or **POWER** buttons to enter that mode. You can also press the mode icon on the right side of the LCD screen to switch to Interval Photo mode.

1. Line up your shot by looking at the LCD screen to see what is in the shot.
2. When shooting at close range (4”-12”), or when switching between far and close scenes, half-press the **SHUTTER** button to refocus the lens on your target. When the red box outline turns green, the target surrounded by the box will now be in focus. Now fully press the **SHUTTER** button to capture a photo.
3. The number of photos that can be captured at the current resolution will be displayed at the bottom of the screen.
4. The number of remaining photos is determined by the selected photo resolution. The higher the photo resolution, the lower the number of photos you are able to be save to the memory card. Before capturing any photos, you can select a preferred photo resolution.

3.6.1 Photo Size (Resolution)

Your camcorder has a number of preset resolutions.

1. In Interval Photo Mode press the **MENU** button.
2. Select *‘Photo Size’* using the **ZOOM**, **UP** or **DOWN** buttons and press the **OK** or **POWER** buttons to enter the *‘Photo Size’* submenu.
3. Push the **ZOOM**, **UP** or **DOWN** to navigate the menu and press the **OK** or **POWER** buttons to confirm your selected setting *(64MP, 56MP, 48MP, 30MP, 24MP, 20MP, 12MP, 8MP)*.
4. Press the **MODE** button to exit the submenu or press the **MENU** button to exit the settings screen.

3.6.2 Interval Duration

This function will let you set the amount of time between each photo.

1. In Interval Photo Mode press the **MENU** button.
2. Select *'Interval Duration'* using the **ZOOM**, **UP** or **DOWN** buttons and press the **OK** or **POWER** buttons to enter the *'Interval Duration'* submenu.
3. Push the **ZOOM**, **UP** or **DOWN** to navigate the menu and press the **OK** or **POWER** buttons to confirm your selected setting *(3 Seconds, 10 Seconds, 15 Seconds, 20 Seconds, 30 Seconds)*.
4. Press the **MODE** button to exit the submenu or press the **MENU** button to exit the settings screen.

3.6.3 White Balance

White Balance changes the color of light in your pictures, making it seem warmer or cooler depending on how the light you're shooting in affects the frame.

1. In Interval Photo Mode press the **MENU** button.
2. Select *'White Balance'* using the **ZOOM**, **UP** or **DOWN** buttons and press the **OK** or **POWER** buttons to enter the *'White Balance'* submenu.
3. Push the **ZOOM**, **UP** or **DOWN** to navigate the menu and press the **OK** or **POWER** buttons to confirm your selected setting *(Auto, Sunny, Cloudy, Incandescent, Fluorescent)*.
4. Press the **MODE** button to exit the submenu or press the **MENU** button to exit the settings screen.

3.6.4 Exposure

This function adjusts the frame brightness in your video.

1. In Interval Photo Mode press the **MENU** button.
2. Select *'Exposure'* using the **ZOOM**, **UP** or **DOWN** and press the **OK** or **POWER** buttons to enter the *'Exposure'* submenu.
3. Push the **ZOOM**, **UP** or **DOWN** to navigate the menu and press the **OK** or **POWER** buttons to confirm your selected exposure mode *(-3, -2, -1, 0, +1, +2, +3).*
4. Press the **MODE** button to exit the submenu or press the **MENU** button to exit the settings screen.

3.6.5 Metering

Metering mode refers to the way in which a camcorder determines the appropriate exposure (quantity of light reaching the camcorder lens). Spot metering will only base the exposure setting on a very small area of the scene. Center metering will use the light from the center of the LCD and the Multi setting measures the light at several points on the screen.

1. In Interval Photo Mode press the **MENU** button.
2. Select *'Metering'* using the **ZOOM**, **UP** or **DOWN** buttons and press the **OK** or **POWER** buttons to enter the *'Metering'* submenu.
3. Push the **ZOOM**, **UP** or **DOWN** buttons to navigate the menu and press the **OK** or **POWER** buttons to confirm your selected exposure mode *(Average, Center, Spot, Matrix)*.
4. Press the **MODE** button to exit the submenu or press the **MENU** button to exit the settings screen.

3.6.6 Sharpness

This function adjusts the visible detail of a video.

1. In Interval Photo Mode press the **MENU** button.
2. Select *'Sharpness'* using the **ZOOM**, **UP** or **DOWN** buttons and press the **OK** or **POWER** buttons to enter the *'Sharpness'* submenu.
3. Push the **ZOOM**, **UP** or **DOWN** to navigate the menu and press the **OK** or **POWER** buttons to confirm your selected setting *(Hard, Normal, Soft)*.
4. Press the **MODE** button to exit the submenu or press the **MENU** button to exit the settings screen.

3.6.7 ISO

This function adjusts the light sensitivity in your video.

1. In Interval Photo Mode press the **MENU** button.
2. Select *'ISO'* using the **ZOOM**, **UP** or **DOWN** buttons and press the **OK** or **POWER** buttons to enter the *'ISO'* submenu.
3. Push the **ZOOM**, **UP** or **DOWN** to navigate the menu and press the **OK** or **POWER** buttons to confirm your selected setting *(Auto, 100, 200, 400, 800, 1600, 3200, 6400)*.
4. Press the **MODE** button to exit the submenu or press the **MENU** button to exit the settings screen.

3.6.8 Time Stamp

This setting allows you to imprint a date & time onto your captured image files. Once an image file is captured with the imprint, the imprint cannot be removed.

1. In Interval Photo Mode press the **MENU** button.
2. Select *'Time Stamp'* using the **ZOOM**, **UP** or **DOWN** buttons.
3. Press the **OK** or **POWER** buttons to turn *'Time Stamp'* on or off. When the word 'On' with a check mark is displayed, the feature is on, when the word 'Off' without a check mark is displayed, the feature is off.
4. Press the **MENU** button to exit the settings screen.

Alternatively, your camcorder's menus can be navigated via the touch screen. Press the 'MENU' icon in the bottom right corner of the touch screen to change chosen settings.

3.7 Photo Burst

In photo burst mode, the camcorder will take a set number of images with each press of the **SHUTTER** button.

Power the camcorder on and press the **MODE** button to enter the mode selection screen. Then press the **LEFT** or **RIGHT** buttons to select Photo Burst mode and press the **OK** or **POWER** buttons to enter that mode. You can also press the mode icon on the right side of the LCD screen to switch to Photo Burst mode.

1. Line up your shot by looking at the LCD screen to see what is in the shot.
2. When shooting at close range (4”-12”), or when switching between far and close scenes, half-press the **SHUTTER** button to refocus the lens on your target. When the red box outline turns green, the target surrounded by the box will now be in focus. Now fully press the **SHUTTER** button to capture a photo.
3. The number of photos that can be captured at the current resolution will be displayed at the bottom of the screen.
4. The number of remaining photos is determined by the selected photo resolution. The higher the photo resolution, the lower the number of photos you are able to be save to the memory card. Before capturing any photos, you can select a preferred photo resolution.

3.7.1 Photo Size (Resolution)

Your camcorder has a number of preset resolutions.

1. In Photo Burst Mode press the **MENU** button.
2. Select *‘Photo Size’* using the **ZOOM**, **UP** or **DOWN** buttons and press the **OK** or **POWER** buttons to enter the *‘Photo Size’* submenu.
3. Push the **ZOOM**, **UP** or **DOWN** to navigate the menu and press the **OK** or **POWER** buttons to confirm your selected setting *(64MP, 56MP, 48MP, 30MP, 24MP, 20MP, 12MP, 8MP)*.
4. Press the **MODE** button to exit the submenu or press the **MENU** button to exit the settings screen.

3.7.2 Photo Burst

This function lets you set the number of photos captured with each photo burst.

1. In Photo Burst Mode press the **MENU** button.
2. Select *'Photo Burst'* using the **ZOOM**, **UP** or **DOWN** buttons and press the **OK** or **POWER** buttons to enter the *'Interval Duration'* submenu.
3. Push the **ZOOM**, **UP** or **DOWN** to navigate the menu and press the **OK** or **POWER** buttons to confirm your selected setting *(3-Phot Burst, 5-Photo Burst, 10-Photo Burst)*.
4. Press the **MODE** button to exit the submenu or press the **MENU** button to exit the settings screen.

3.7.3 White Balance

White Balance changes the color of light in your pictures, making it seem warmer or cooler depending on how the light you're shooting in affects the frame.

1. In Photo Burst Mode press the **MENU** button.
2. Select *'White Balance'* using the **ZOOM**, **UP** or **DOWN** buttons and press the **OK** or **POWER** buttons to enter the *'White Balance'* submenu.
3. Push the **ZOOM**, **UP** or **DOWN** to navigate the menu and press the **OK** or **POWER** buttons to confirm your selected setting *(Auto, Sunny, Cloudy, Incandescent, Fluorescent)*.
4. Press the **MODE** button to exit the submenu or press the **MENU** button to exit the settings screen.

3.7.4 Exposure

This function adjusts the frame brightness in your video.

1. In Photo Burst Mode press the **MENU** button.
2. Select *'Exposure'* using the **ZOOM**, **UP** or **DOWN** and press the **OK** or **POWER** buttons to enter the *'Exposure'* submenu.
3. Push the **ZOOM**, **UP** or **DOWN** to navigate the menu and press the **OK** or **POWER** buttons to confirm your selected exposure mode *(-3, -2, -1, 0, +1, +2, +3).*
4. Press the **MODE** button to exit the submenu or press the **MENU** button to exit the settings screen.

3.7.5 Metering

Metering mode refers to the way in which a camcorder determines the appropriate exposure (quantity of light reaching the camcorder lens). Spot metering will only base the exposure setting on a very small area of the scene. Center metering will use the light from the center of the LCD and the Multi setting measures the light at several points on the screen.

1. In Photo Burst Mode press the **MENU** button.
2. Select *'Metering'* using the **ZOOM**, **UP** or **DOWN** buttons and press the **OK** or **POWER** buttons to enter the *'Metering'* submenu.
3. Push the **ZOOM**, **UP** or **DOWN** buttons to navigate the menu and press the **OK** or **POWER** buttons to confirm your selected exposure mode *(Average, Center, Spot, Matrix)*.
4. Press the **MODE** button to exit the submenu or press the **MENU** button to exit the settings screen.

3.7.6 Sharpness

This function adjusts the visible detail of a video.

1. In Photo Burst Mode press the **MENU** button.
2. Select *'Sharpness'* using the **ZOOM**, **UP** or **DOWN** buttons and press the **OK** or **POWER** buttons to enter the *'Sharpness'* submenu.
3. Push the **ZOOM**, **UP** or **DOWN** to navigate the menu and press the **OK** or **POWER** buttons to confirm your selected setting *(Hard, Normal, Soft)*.
4. Press the **MODE** button to exit the submenu or press the **MENU** button to exit the settings screen.

3.7.7 ISO

This function adjusts the light sensitivity in your video.

1. In Photo Burst Mode press the **MENU** button.
2. Select *'ISO'* using the **ZOOM**, **UP** or **DOWN** buttons and press the **OK** or **POWER** buttons to enter the *'ISO'* submenu.
3. Push the **ZOOM**, **UP** or **DOWN** to navigate the menu and press the **OK** or **POWER** buttons to confirm your selected setting *(Auto, 100, 200, 400, 800, 1600, 3200, 6400)*.
4. Press the **MODE** button to exit the submenu or press the **MENU** button to exit the settings screen.

3.7.8 Time Stamp

This setting allows you to imprint a date & time onto your captured image files. Once an image file is captured with the imprint, the imprint cannot be removed.

1. In Photo Burst Mode press the **MENU** button.
2. Select *'Time Stamp'* using the **ZOOM**, **UP** or **DOWN** buttons.
3. Press the **OK** or **POWER** buttons to turn *'Time Stamp'* on or off. When the word 'On' with a check mark is displayed, the feature is on, when the word 'Off' without a check mark is displayed, the feature is off.
4. Press the **MENU** button to exit the settings screen.

Alternatively, your camcorder's menus can be navigated via the touch screen. Press the 'MENU' icon in the bottom right corner of the touch screen to change chosen settings.

3.8 Timer Mode

In Timer mode, the camcorder will take a single picture after a set amount of time has elapsed with each press of the **SHUTTER** button.

Power the camcorder on and press the **MODE** button to enter the mode selection screen. Then press the **LEFT** or **RIGHT** buttons to select Timer mode and press the **OK** or **POWER** buttons to enter that mode. You can also press the mode icon on the right side of the LCD screen to switch to Timer mode.

1. Line up your shot by looking at the LCD screen to see what is in the shot.
2. When shooting at close range (4”-12”), or when switching between far and close scenes, half-press the **SHUTTER** button to refocus the lens on your target. When the red box outline turns green, the target surrounded by the box will now be in focus. Now fully press the **SHUTTER** button to capture a photo.
3. The number of photos that can be captured at the current resolution will be displayed at the bottom of the screen.
4. The number of remaining photos is determined by the selected photo resolution. The higher the photo resolution, the lower the number of photos you are able to be save to the memory card. Before capturing any photos, you can select a preferred photo resolution.

3.8.1 Photo Size (Resolution)

Your camcorder has a number of preset resolutions.

1. In Timer Mode press the **MENU** button.
2. Select *‘Photo Size’* using the **ZOOM**, **UP** or **DOWN** buttons and press the **OK** or **POWER** buttons to enter the *‘Photo Size’* submenu.
3. Push the **ZOOM**, **UP** or **DOWN** to navigate the menu and press the **OK** or **POWER** buttons to confirm your selected setting *(64MP, 56MP, 48MP, 30MP, 24MP, 20MP, 12MP, 8MP)*.
4. Press the **MODE** button to exit the submenu or press the **MENU** button to exit the settings screen.

3.8.2 Timer Duration

This function determines the time delay before a photograph is captured. This setting can be used by photographers to take photographs of themselves.

1. In Timer Mode press the **MENU** button.
2. Select *'Timer Duration'* using the **ZOOM**, **UP** or **DOWN** buttons and press the **OK** or **POWER** buttons to enter the *'Timer Duration'* submenu.
3. Push the **ZOOM**, **UP** or **DOWN** to navigate the menu and press the **OK** or **POWER** buttons to confirm your selected setting *(3 Seconds, 5 Seconds, 10 Seconds, 20 Seconds)*.
4. Press the **MODE** button to exit the submenu or press the **MENU** button to exit the settings screen.

3.8.3 White Balance

White Balance changes the color of light in your pictures, making it seem warmer or cooler depending on how the light you're shooting in affects the frame.

1. In Timer Mode press the **MENU** button.
2. Select *'White Balance'* using the **ZOOM**, **UP** or **DOWN** buttons and press the **OK** or **POWER** buttons to enter the *'White Balance'* submenu.
3. Push the **ZOOM**, **UP** or **DOWN** to navigate the menu and press the **OK** or **POWER** buttons to confirm your selected setting *(Auto, Sunny, Cloudy, Incandescent, Fluorescent)*.
4. Press the **MODE** button to exit the submenu or press the **MENU** button to exit the settings screen.

3.8.4 Exposure

This function adjusts the frame brightness in your video.

1. In Timer Mode press the **MENU** button.
2. Select *'Exposure'* using the **ZOOM**, **UP** or **DOWN** and press the **OK** or **POWER** buttons to enter the *'Exposure'* submenu.
3. Push the **ZOOM**, **UP** or **DOWN** to navigate the menu and press the **OK** or **POWER** buttons to confirm your selected exposure mode *(-3, -2, -1, 0, +1, +2, +3).*
4. Press the **MODE** button to exit the submenu or press the **MENU** button to exit the settings screen.

3.8.5 Metering

Metering mode refers to the way in which a camcorder determines the appropriate exposure (quantity of light reaching the camcorder lens). Spot metering will only base the exposure setting on a very small area of the scene. Center metering will use the light from the center of the LCD and the Multi setting measures the light at several points on the screen.

1. In Timer Mode press the **MENU** button.
2. Select *'Metering'* using the **ZOOM**, **UP** or **DOWN** buttons and press the **OK** or **POWER** buttons to enter the *'Metering'* submenu.
3. Push the **ZOOM**, **UP** or **DOWN** buttons to navigate the menu and press the **OK** or **POWER** buttons to confirm your selected exposure mode *(Average, Center, Spot, Matrix)*.
4. Press the **MODE** button to exit the submenu or press the **MENU** button to exit the settings screen.

3.8.6 Sharpness

This function adjusts the visible detail of a video.

1. In Timer Mode press the **MENU** button.
2. Select *'Sharpness'* using the **ZOOM**, **UP** or **DOWN** buttons and press the **OK** or **POWER** buttons to enter the *'Sharpness'* submenu.
3. Push the **ZOOM**, **UP** or **DOWN** to navigate the menu and press the **OK** or **POWER** to confirm your selected setting *(Hard, Normal, Soft)*.
4. Press the **MODE** button to exit the submenu or press the **MENU** button to exit the settings screen.

3.8.7 ISO

This function adjusts the light sensitivity in your video.

1. In Timer Mode press the **MENU** button.
2. Select *'ISO'* using the **ZOOM**, **UP** or **DOWN** buttons and press the **OK** or **POWER** buttons to enter the *'ISO'* submenu.
3. Push the **ZOOM**, **UP** or **DOWN** to navigate the menu and press the **OK** or **POWER** buttons to confirm your selected setting *(Auto, 100, 200, 400, 800, 1600, 3200, 6400)*.
4. Press the **MODE** button to exit the submenu or press the **MENU** button to exit the settings screen.

3.8.8 Time Stamp

This setting allows you to imprint a date & time onto your captured image files. Once an image file is captured with the imprint, the imprint cannot be removed.

1. In Timer press the **MENU** button.
2. Select *'Time Stamp'* using the **ZOOM**, **UP** or **DOWN** buttons.
3. Press the **OK** or **POWER** buttons to turn *'Time Stamp'* on or off. When the word 'On' with a check mark is displayed, the feature is on, when the word 'Off' without a check mark is displayed, the feature is off.
4. Press the **MENU** button to exit the settings screen.

Alternatively, your camcorder's menus can be navigated via the touch screen. Press the 'MENU' icon in the bottom right corner of the touch screen to change chosen settings.

3.9 Playback Mode

Videos and photos captured on your camcorder can be easily played back. Power the camcorder on and press the **MODE** button to enter the mode selection screen. Then press the **LEFT** or **RIGHT** buttons to select Playback mode and press the **OK** or **POWER** buttons to enter Playback mode. You can also press the Playback icon in the bottom left corner of the touch screen to switch to Playback mode.

1. Press the **LEFT** or **RIGHT** buttons to cycle through the captured videos and images stored on the memory card.
2. While viewing a recorded video, press the **OK** button to start playing a recorded video, press the **OK** button again to pause the video.
3. While a video is playing, press and hold the **RIGHT** or **ZOOM IN** buttons to fast forward and press and hold the **LEFT** or **ZOOM OUT** buttons to rewind.

In Playback Mode the following option are available:

3.9.1 Delete

This function is used to delete videos. Videos can be deleted singly or all at once. **Deleted videos and images are permanently deleted and cannot be recovered.**

1. In Playback Mode press the **MENU** button to access the Delete submenu.
2. Use the **LEFT** or **RIGHT** buttons to navigate the menu and press the **OK** or **POWER** buttons to confirm your selected setting *(Confirm, Cancel)*.
3. Press the **MODE** button to exit the menu without deleting any videos or images.

NOTE: Deleted media cannot be recovered.

Alternatively, your camcorder's menus can be navigated via the touch screen. Press the 'Trash' icon in the bottom right corner of the touch screen to access the Delete menu.

3.10 Settings Mode

Basic settings can be changed in the Settings menu. These include date & time, language and sound options. Power the camcorder on and press the **MENU** button. Then press the **MODE** button to enter the Settings menu.

3.10.1 Focus Mode

This function allows you to change the camcorder's focusing mode, either manual focus or auto focus.

1. In All Modes press the **MENU** button.
2. Then press the **MODE** button until the gear icon is highlighted.
3. Select *'Focus Mode'* using the **ZOOM**, **UP** or **DOWN** buttons and press the **OK** or **POWER** buttons to enter the *'Focus Mode'* submenu.
4. Push the **ZOOM**, **UP** or **DOWN** to navigate the menu and press the **OK** or **POWER** buttons to confirm your selected setting *(Auto focus, Manual Focus)*.
5. Press the **MODE** button to exit the submenu or press the **MENU** button to exit the settings screen.

3.10.2 Wi-Fi

This function allows you activate the Wi-Fi on the camcorder.

1. In All Modes press the **MENU** button.
2. Then press the **MODE** button until the gear icon is highlighted.
3. Select *'Wi-Fi'* using the **ZOOM**, **UP** or **DOWN** buttons.
4. Press the **OK** or **POWER** buttons to turn *'Wi-Fi'* on. When the word 'On' with a check mark is displayed, the Wi-Fi is on. The Wi-Fi information and password will now be displayed on the screen.
5. Press the **UP** button to turn the Wi-Fi off.

3.10.3 Wi-Fi Information

This function displays the camcorder's Wi-Fi name and password.

1. In All Modes press the **MENU** button.
2. Then press the **MODE** button until the gear icon is highlighted.
3. Select *'Wi-Fi Information'* using the **ZOOM**, **UP** or **DOWN** buttons and press the **OK** or **POWER** buttons to enter the *'Wi-Fi Information'* submenu.

4. The Wi-Fi information will be now be displayed on the screen. Press the **OK** or **POWER** buttons to exit the submenu.

3.10.4 Reset Wi-Fi

This function allows you to reset the Wi-Fi.

1. In All Modes press the **MENU** button.
2. Then press the **MODE** button until the gear icon is highlighted.
3. Select *'Reset Wi-Fi'* using the **ZOOM**, **UP** or **DOWN** buttons and press the **OK** or **POWER** buttons to enter the *'Reset Wi-Fi'* submenu.
4. Push the **ZOOM**, **UP** or **DOWN** to navigate the menu and press the **OK** or **POWER** buttons to confirm your selected setting *(Confirm, Cancel)*.
5. Press the **MODE** button to exit the submenu or press the **MENU** button to exit the settings screen.

3.10.5 Frequency

This function sets the frequency of the camcorder from 50Hz to 60Hz. Please check the frequency of your location and set accordingly.

1. In All Modes press the **MENU** button.
2. Then press the **MODE** button until the gear icon is highlighted.
3. Select *'Frequency'* using the **ZOOM**, **UP** or **DOWN** buttons and press the **OK** or **POWER** buttons to enter the *'Frequency'* submenu.
4. Push the **ZOOM**, **UP** or **DOWN** to navigate the menu and press the **OK** or **POWER** buttons to confirm your selected setting *(Auto, 50Hz, 60Hz)*. The default frequency for the United States is 60Hz.
5. Press the **MODE** button to exit the submenu or press the **MENU** button to exit the settings screen.

3.10.6 LED Indicator

This function allows you turn the LED status indicator on and off.

1. In All Modes press the **MENU** button.
2. Then press the **MODE** button until the gear icon is highlighted.
3. Select *'LED Indicator'* using the **ZOOM**, **UP** or **DOWN** buttons.
4. Press the **OK** or **POWER** buttons to turn *'LED Indicator'* on or off. When the word 'On' with a check mark is displayed, the feature is on, when the word 'Off' without a check mark is displayed, the feature is off.

5. Press the **MENU** button to exit the settings screen.

3.10.7 Brightness

This function allows you to set the brightness of your camcorder's LCD screen.

1. In All Modes press the **MENU** button.
2. Then press the **MODE** button until the gear icon is highlighted.
3. Select *'Brightness'* using the **ZOOM**, **UP** or **DOWN** buttons and press the **OK** or **POWER** buttons to enter the *'Brightness'* submenu.
4. Push the **ZOOM**, **UP** or **DOWN** to navigate the menu and press the **OK** or **POWER** buttons to confirm your selected setting *(High, Medium, Low)*.
5. Press the **MODE** button to exit the submenu or press the **MENU** button to exit the settings screen.

3.10.8 Auto Screen Saver

This function sets the duration of time in which the camcorder will wait with no user input before automatically turning off the LCD screen. Note: even while the screen is off, the camcorder will still be powered on.

1. In All Modes press the **MENU** button.
2. Then press the **MODE** button until the gear icon is highlighted.
3. Select *'Auto Screen Saver'* using the **ZOOM**, **UP** or **DOWN** buttons and press the **OK** or **POWER** buttons to enter the *'Auto Screen Saver'* submenu.
4. Push the **ZOOM**, **UP** or **DOWN** to navigate the menu and press the **OK** or **POWER** buttons to confirm your selected setting *(Off, 30 Seconds, 1 Minute, 2 Minutes)*.
5. Press the **MODE** button to exit the submenu or press the **MENU** button to exit the settings screen.

3.10.9 Auto Power Off

This function sets the duration of time in which the camcorder will wait with no user input before automatically powering off.

1. In All Modes press the **MENU** button.
2. Then press the **MODE** button until the gear icon is highlighted.
3. Select *'Auto Power Off'* using the **ZOOM**, **UP** or **DOWN** buttons and press

the **OK** or **POWER** buttons to enter the *'Auto Power Off'* submenu.

4. Push the **ZOOM**, **UP** or **DOWN** to navigate the menu and press the **OK** or **POWER** buttons to confirm your selected setting *(Off, 3 Minutes, 5 Minutes, 10 Minutes)*.
5. Press the **MODE** button to exit the submenu or press the **MENU** button to exit the settings screen.

3.10.10 Button Sound

This function can turn the sound the camcorder makes after pressing a button.

1. In All Modes press the **MENU** button.
2. Then press the **MODE** button until the gear icon is highlighted.
3. Select *'Button Sound'* using the **ZOOM**, **UP** or **DOWN** buttons and press the **OK** or **POWER** buttons to enter the *'Button Sound'* submenu.
4. Push the **ZOOM**, **UP** or **DOWN** to navigate the menu and press the **OK** or **POWER** buttons to confirm your selected setting *(High, Medium, Low, Off)*.
5. Press the **MODE** button to exit the submenu or press the **MENU** button to exit the settings screen.

3.10.11 Power On/Off Sound

This function can turn the sound the camcorder makes after turning the camcorder on or off.

1. In All Modes press the **MENU** button.
2. Then press the **MODE** button until the gear icon is highlighted.
3. Select *'Power On/Off Sound'* using the **ZOOM**, **UP** or **DOWN** buttons and press the **OK** or **POWER** buttons to enter the *'Power On/Off Sound'* submenu.
4. Push the **ZOOM**, **UP** or **DOWN** to navigate the menu and press the **OK** or **POWER** buttons to confirm your selected setting *(On, Off)*.
5. Press the **MODE** button to exit the submenu or press the **MENU** button to exit the settings screen.

3.10.12 Language

This function allows you to set the camcorder's interface language.

1. In All Modes press the **MENU** button.
2. Then press the **MODE** button until the gear icon is highlighted.
3. Select *'Language'* using the **ZOOM**, **UP** or **DOWN** buttons and press the **OK** or **POWER** buttons to enter the *'Language'* submenu.
4. Push the **ZOOM**, **UP** or **DOWN** to navigate the menu and press the **OK** or **POWER** buttons to confirm your selected setting.
5. Press the **MODE** button to exit the submenu or press the **MENU** button to exit the settings screen.

3.10.13 Date Format

This function allows you to set the format that the date is displayed as on the camcorder.

1. In All Modes press the **MENU** button.
2. Then press the **MODE** button until the gear icon is highlighted.
3. Select *'Date Format'* using the **ZOOM**, **UP** or **DOWN** buttons and press the **OK** or **POWER** buttons to enter the *'Date Format'* submenu.
4. Push the **ZOOM**, **UP** or **DOWN** to navigate the menu and press the **OK** or **POWER** buttons to confirm your selected setting *(YYYY/MM/DD, MM/DD/YYYY, DD/MM/YYYY)*.
5. Press the **MODE** button to exit the submenu or press the **MENU** button to exit the settings screen.

3.10.14 Time Set

This function allows you to set the current time on your camcorder.

1. In All Modes press the **MENU** button.
2. Then press the **MODE** button until the gear icon is highlighted.
3. Select *'Time Set'* using the **ZOOM**, **UP** or **DOWN** buttons and press the **OK** or **POWER** buttons to enter the *'Time Set'* submenu.
4. Push the **ZOOM**, **UP** or **DOWN** to change the highlighted value and press the **OK** or **POWER** buttons to change the highlighted value.
5. Press the **MODE** button to save your settings and exit the submenu.

3.10.15 Date Set

This function allows you to set the current date on your camcorder.

1. In All Modes press the **MENU** button.

2. Then press the **MODE** button until the gear icon is highlighted.
3. Select *'Date Set'* using the **ZOOM**, **UP** or **DOWN** buttons and press the **OK** or **POWER** buttons to enter the *'Date Set'* submenu.
4. Push the **ZOOM**, **UP** or **DOWN** to change the highlighted value and press the **OK** or **POWER** buttons to change the highlighted value.
5. Press the **MODE** button to save your settings and exit the submenu.

3.10.16 Format Memory Card

The format setting erases all photos, videos and data stored on your memory card.

1. In All Modes press the **MENU** button.
2. Then press the **MODE** button until the gear icon is highlighted.
3. Select *'Format Memory Card'* using the **ZOOM**, **UP** or **DOWN** buttons and press the **OK** or **POWER** buttons to enter the *'Format Memory Card'* submenu.
4. Push the **ZOOM**, **UP** or **DOWN** to navigate the menu and press the **OK** or **POWER** buttons to confirm your selected setting *(Format, Cancel)*.
5. Press the **MODE** button to exit the submenu or press the **MENU** button to exit the settings screen.

NOTE: Use extreme caution when accessing this setting. There is no way to recover formatted media. Once you format your memory card, all recorded media will be DELETED permanently and cannot be recovered.

3.10.17 Device Info

This setting displays the current firmware version of your camera.

1. In All Modes press the **MENU** button.
2. Then press the **MODE** button until the gear icon is highlighted.
3. Select *'Device Info'* using the **ZOOM**, **UP** or **DOWN** buttons and press the **OK** or **POWER** buttons to enter the *'Device Info'* submenu.
4. The firmware version will now be displayed on the screen.
5. Press the **OK** or **POWER** buttons to exit the submenu.

3.10.18 Factory Reset

Factory default settings can be restored in this menu. This function will not delete the media stored on the memory card, and will only restore all of the menu's setting back to factory default settings.

1. In All Modes press the **MENU** button.
2. Then press the **MODE** button until the gear icon is highlighted.
3. Select *'Factory Reset'* using the **ZOOM**, **UP** or **DOWN** buttons and press the **OK** or **POWER** buttons to enter the *'Factory Reset'* submenu.
4. Push the **ZOOM**, **UP** or **DOWN** to navigate the menu and press the **OK** or **POWER** buttons to confirm your selected setting *(Confirm, Cancel)*.
5. Press the **MODE** button to exit the submenu or press the **MENU** button to exit the settings screen.

Alternatively, your camcorder's menus can be navigated via the touch screen. Press the 'MENU' icon in the bottom left corner of the screen to change chosen settings.

3.11 Wireless Connectivity

3.11.1 Connecting to the OD Cam App

To wirelessly operate the MN4KPRO camcorder you will need to install the “XDV PRO” app on your Android or iOS device. To download the app, search for “XDV PRO” in the Apple App Store or Google Play Store. You can also scan the QR code below to find the app.

The camcorder can be operated remotely by following the steps below:

1. Turn the camcorder on and press and hold the **UP** button to activate the Wi-Fi.
2. The Network Name (SSID) and the password will be displayed on the screen.
3. Open your phone’s wireless menu, turn all wireless settings on and connect to the network named “Minolta MN4KPRO_XXXX” then join the network, password is 12345678.

4. Exit the wireless menu on your smartphone and open the “XDV PRO” app to launch remote operation of the camcorder.
5. When first launching the app, you will be prompted to allow the app to use your location. Select **“Allow Once”** or **“Allow While Using App”**. This will allow the app to communicate with your camcorder and will allow the app to work properly. The app will not connect to your camcorder if you select **"Don't Allow**".

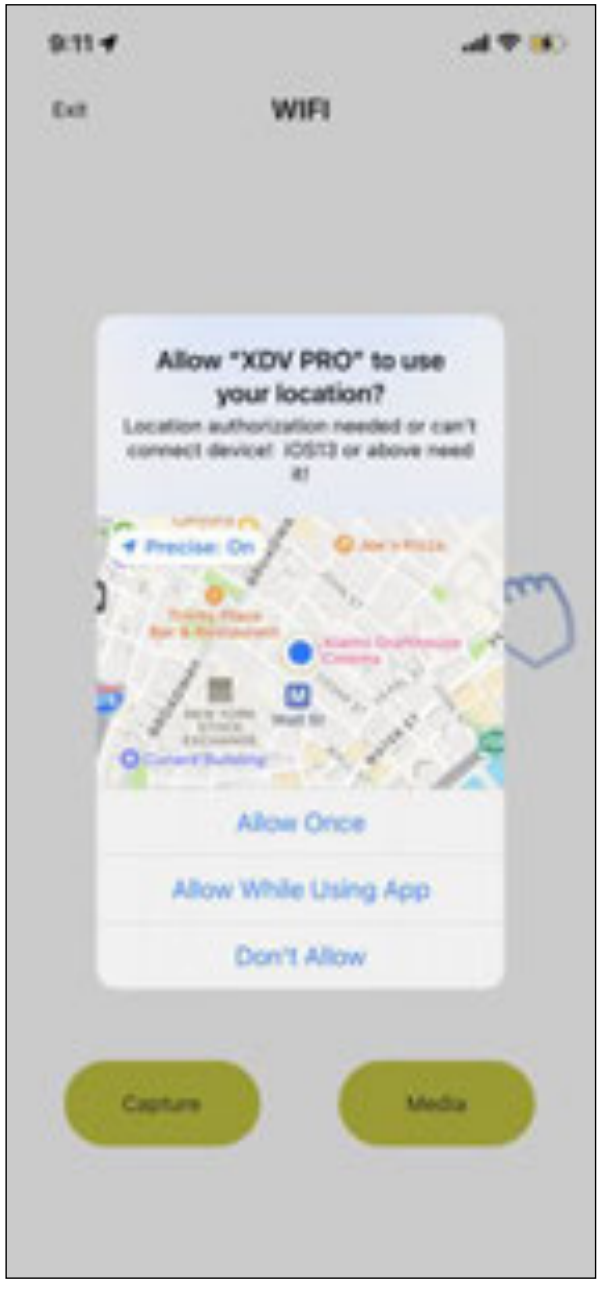

6. As part of the iOS operating system, your smartphone's Location Settings must be enabled in order to allow proper communication between your smartphone and your Minolta camcorder. Selecting will prevent your camcorder from connecting to the XDV PRO app.
7. If you selected **“Don’t Allow”**, then you can change this setting by going into your iOS Settings, selecting the XDV PRO app, selecting the Location settings and select **“While Using App”**.

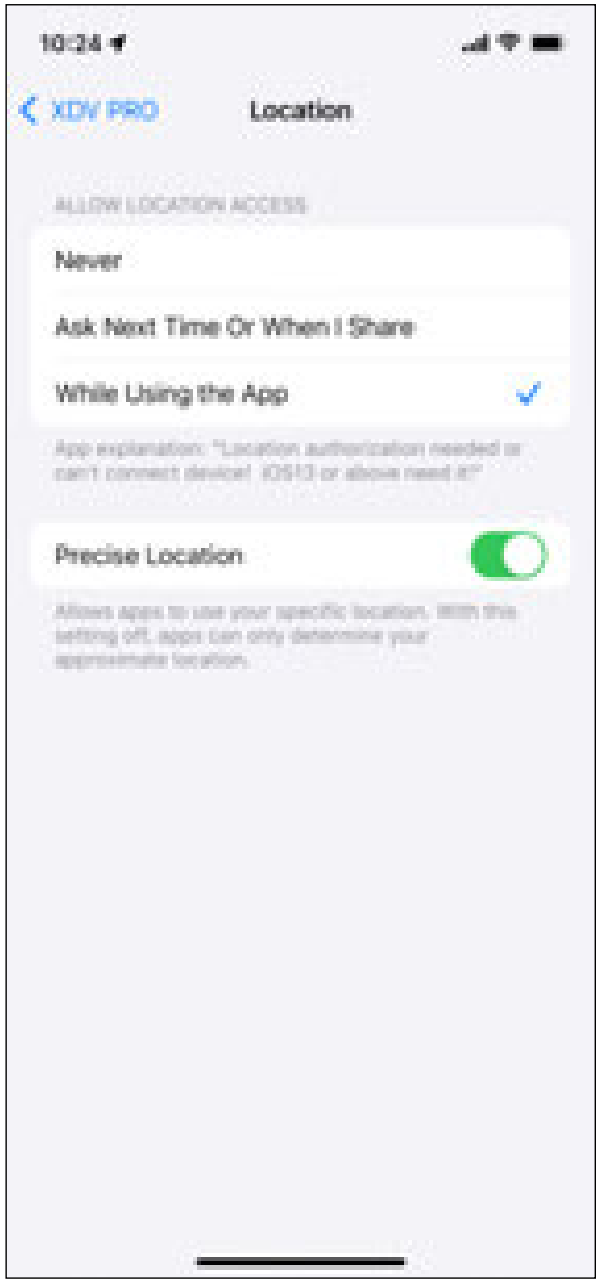

8. To connect to your camcorder, select “Capture” this will allow you to control the camcorder from your smartphone.

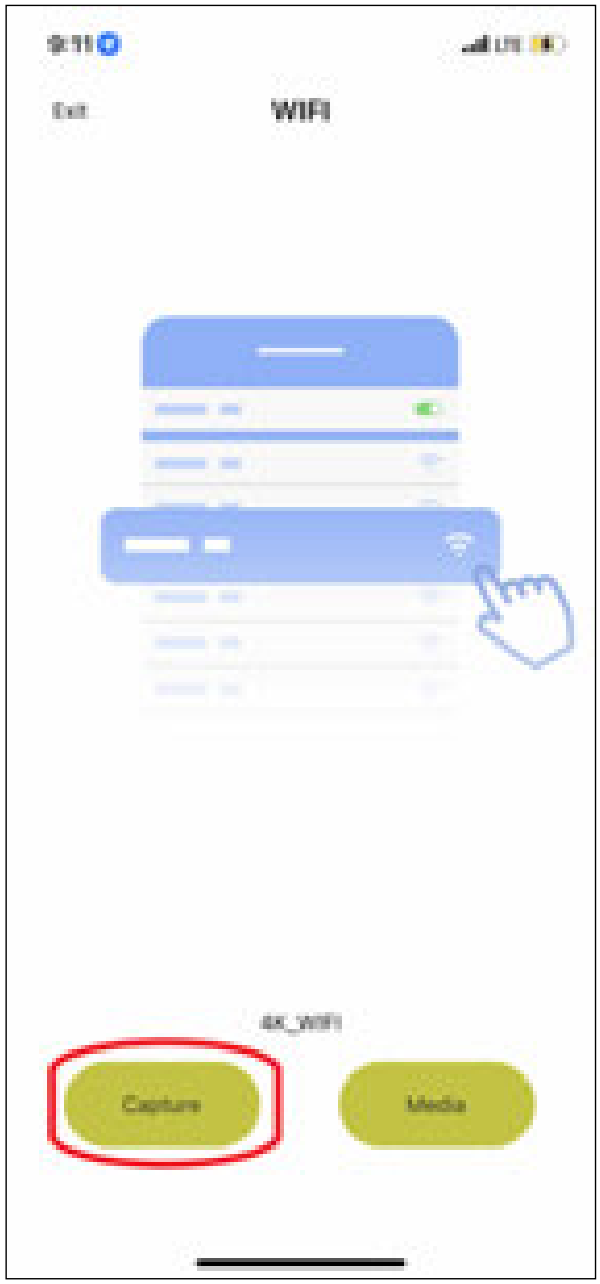

3.11.2 Operating the XDV PRO App

Your MN4KPRO will now be operable via your smartphone. It will initially default to the video recording function. To change to Photo Mode, press the camera icon in the bottom of your phone screen.

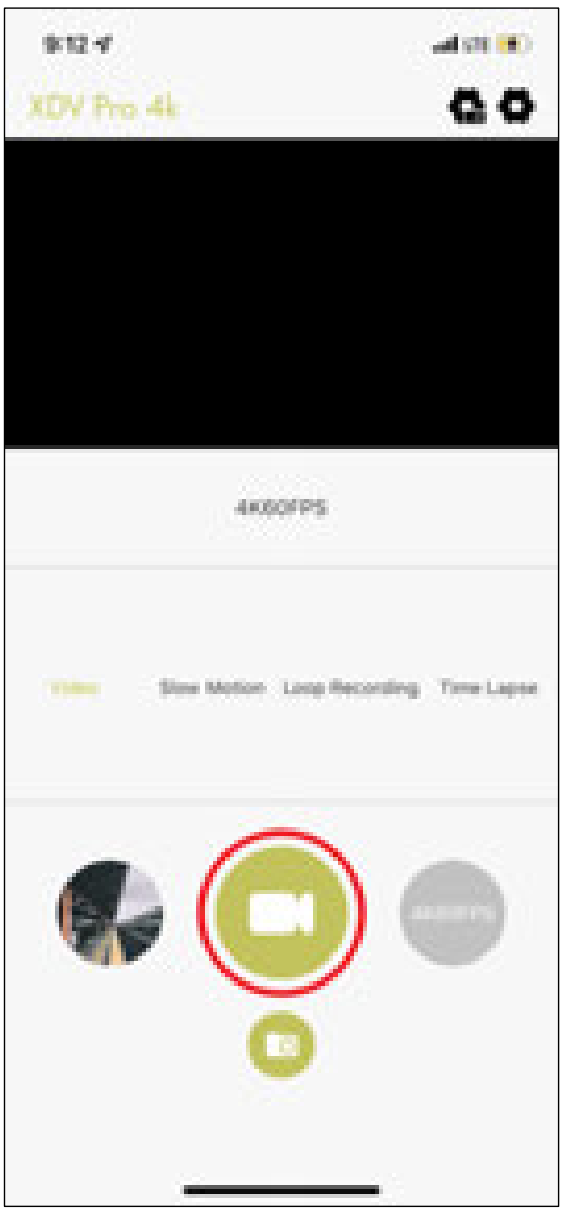

Video Mode

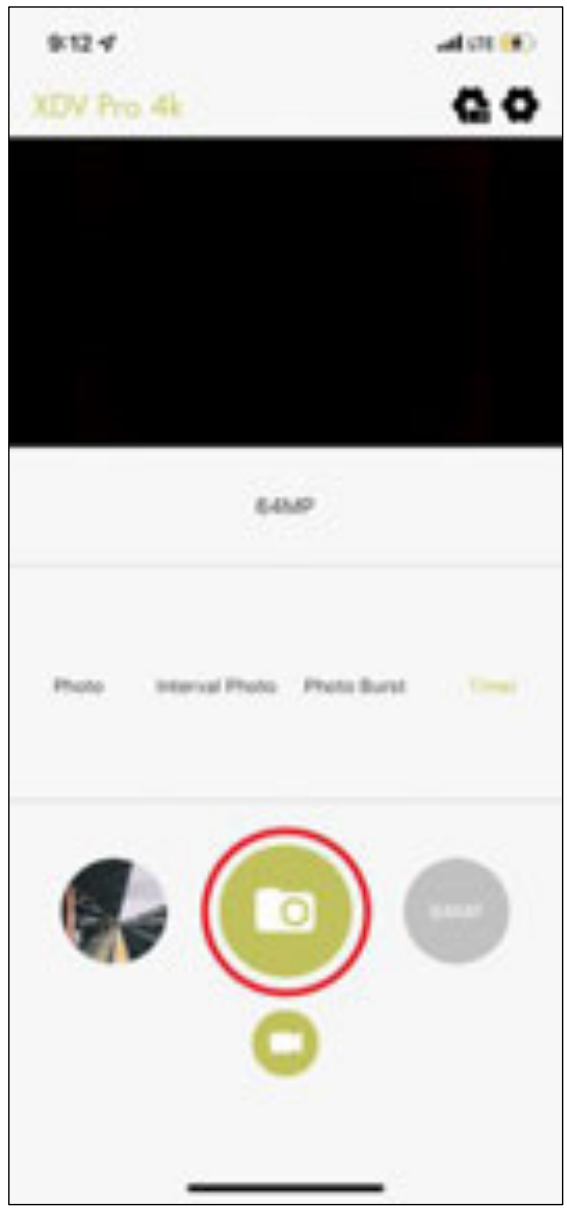

Photo Mode

3.11.3 Recording Videos Remotely

1. To start recording a video, press the record button, the camcorder icon, in the middle of your smartphone's screen.
2. The video recording mode can be changed by selecting the mode name from the middle of your smartphone's screen.
3. The video mode settings can be accessed by selecting the gear icon in the top right corner of your smartphone's screen.

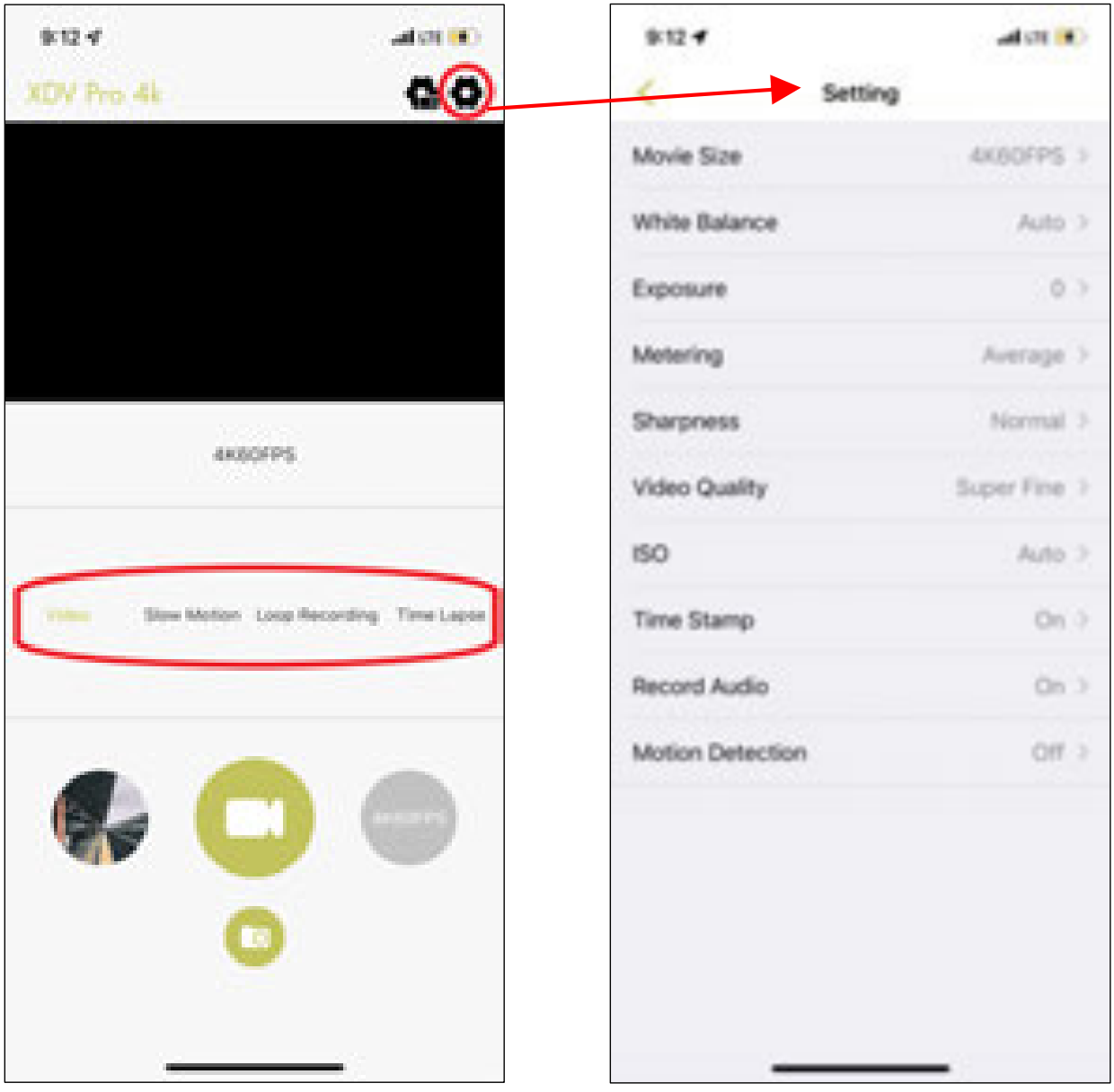

3.11.4 Taking Photos Remotely

1. To capture a photo, press the capture button, a camera icon, in the middle of your smartphone's screen.
2. The photo capture mode can be changed by selecting the mode name from the middle of your smartphone's screen.
3. The photo mode settings can be accessed by selecting the gear icon in the top right corner of your smartphone's screen.

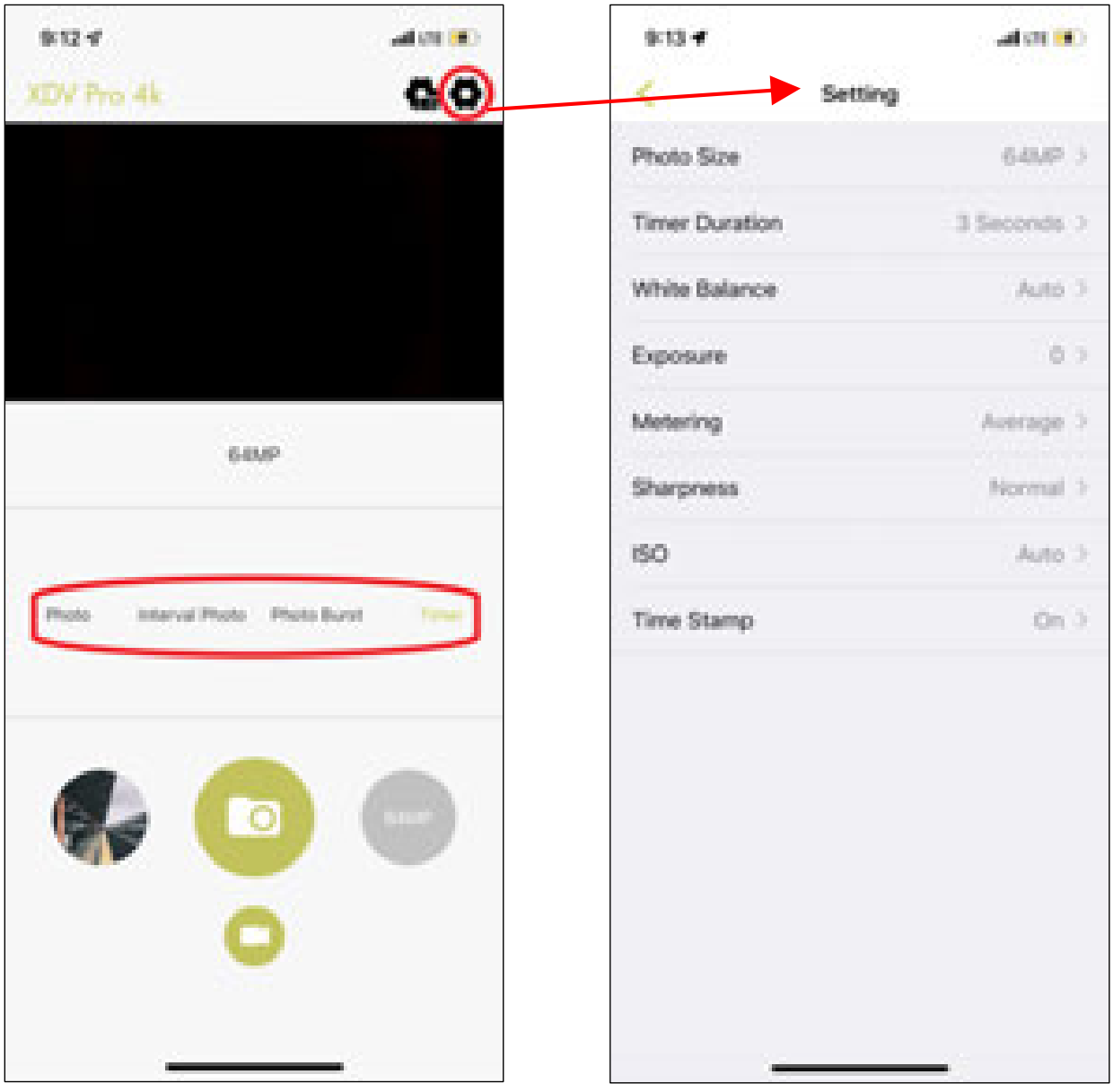

3.11.5 Viewing Media on the App

1. To view the recorded images and videos stored on the memory card on the app, press the photo gallery button in the bottom left of your smartphone's screen.
2. Tap the photo or video file you wish to view. From this screen media can be saved to your smartphone and deleted. If a photo or video is deleted on the app, it will also be removed from the memory card in the camera.

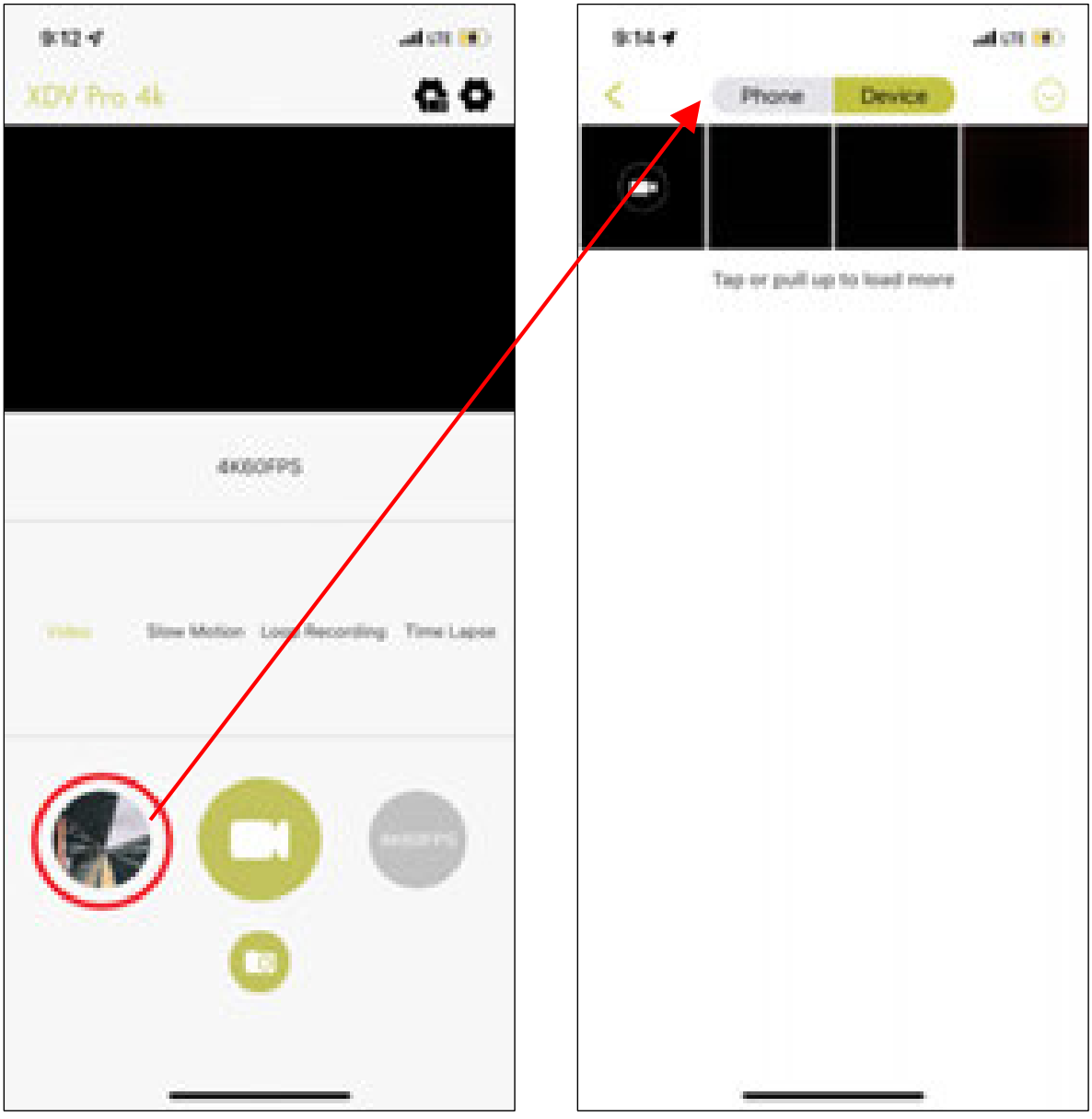

3.11.6 Changing Camera Settings on the App

Camcorder settings can also be changed on the app. Press the icon in the top right corner of your smartphone's screen to launch the settings menu. From here, a number of settings including can be changed.

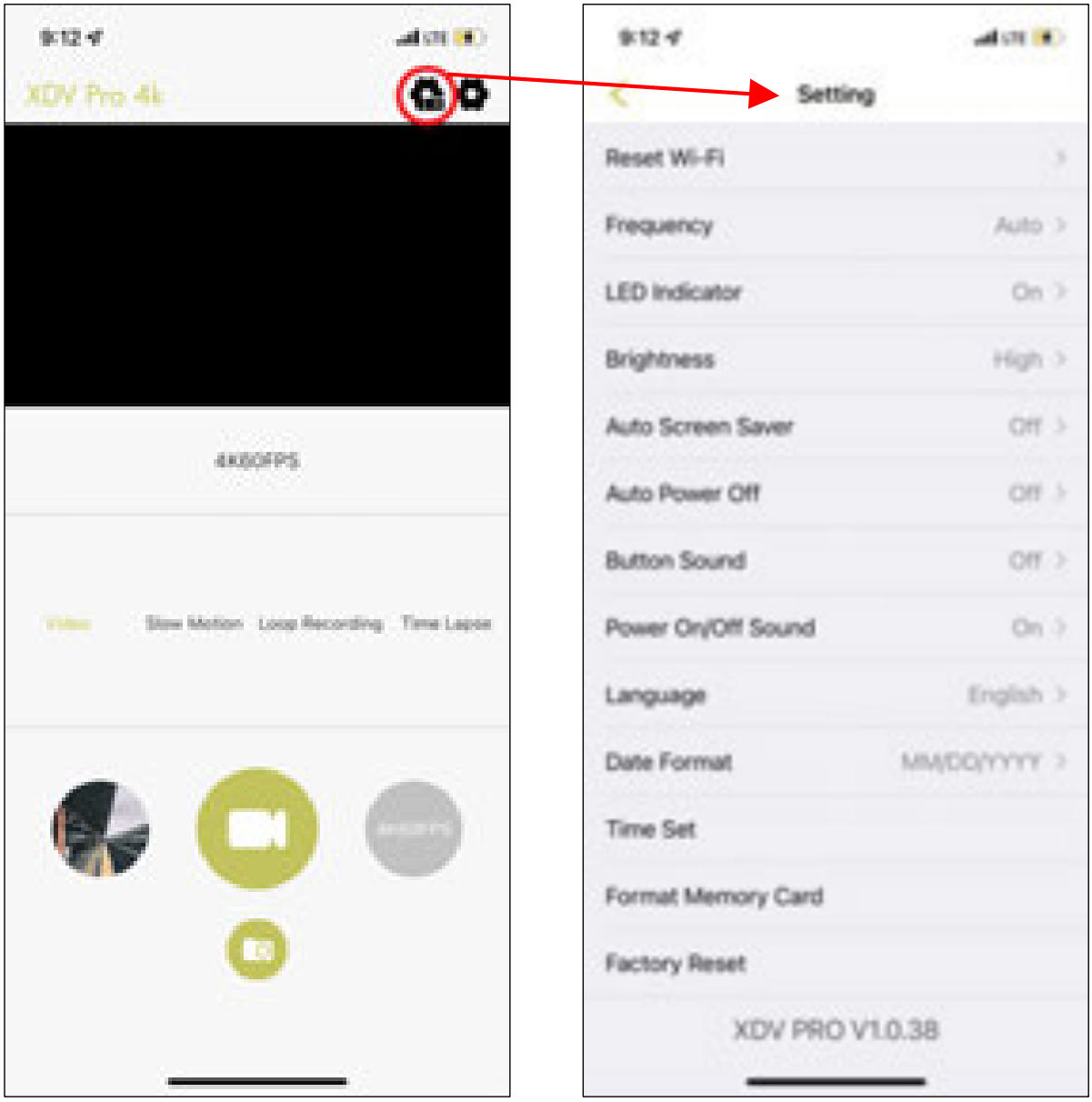

4.1 Technical Specifications

Model Number	Minolta MN4KPRO
Lens	Auto Focus • f=7.62mm • F/2.0 • 10cm ~ infinity
Zoom	18X Digital Zoom
Image Sensor	13MP CMOS Sensor
Shutter	Electronic
Pixels (photo)	JPEG: 64MP • 56MP • 48MP • 30MP • 24MP • 20MP • 12MP • 8MP
Pixels (video)	MP4: 4K (60fps) • 4K (30fps) • 2.7K (30fps) • 1080P (60fps) • 1080P (30fps) • 720P (120fps) • 720P (60fps) • 720P (30fps)
ISO Sensitivity	Auto • 100 • 200 • 400 • 800 • 1600 • 3200 • 6400
LCD Screen	4.0” IPS 16:9 LCD Touch Screen
Assistive Light	White LED
Wireless Connectivity	Built-in Wi-Fi with smartphone app integration 2.4Ghz for included remote control
Power Saving Mode	OFF • 3 Minutes • 5 Minutes • 10 Minutes
White Balance Control	Auto • Sunny • Cloudy • Incandescent • Florescent
Accessories	Lens Hood • Handheld Stabilizer • External Stereo Microphone • Video LED Light • Remote Control
Recording Media	SD • SDXC; Maximum: 256GB
I/O Ports	USB-C • Microphone (built-in MIC) • Speaker • Microphone Jack (3.5mm) • Mini HDMI
Power	Lithium-Ion NPX-108 / 3.7V 3,300mAh
Dimensions	7.0 x 3.56 x 3.22 in. • 1.6 lbs.

Minolta is a registered trademark of JMM Lee Properties, LLC
and is used in the United States by Elite Brands Inc. under license.

40 Wall Street, 61st Floor, New York, NY 10005 USA • Tel: 800-441-1100
www.minoltadigital.com • www.elitebrands.com
Copyright © 2025 Elite Brands Inc.

If you're having difficulties with your camera, or would like further assistance, please call our toll-free technical support hotline at 800-441-1100. Please be sure to have your camera handy when calling.

MINOLTA®

MN4KPRO