IntelliMix Bar Pro Kit

IntelliMix™ Bar Pro

Shure IntelliMix Bar Pro Kit videoconferencing system manual. Includes setup instructions, feature overviews, troubleshooting, specifications, and more.

Version: 1.3 (2026-H)

Table of Contents

IntelliMix Bar Pro Kit IntelliMix™ Bar Pro **3**

Update Firmware **3**

Safety and Regulatory Information for Wireless Products **3**

- Important Note 3
- Explanation of Symbols 3
- Important Safety Instructions 3
- Products with AC Adapters 4

Important Product Regulatory Information **4**

- Regulatory Information for Class A EMC Products 5
- Regulatory Information for Wireless Products 7
- WIRELESS Regulatory Information for LE-LAN (2.4GHz and 5GHz) 8
- Regulatory Information for Wireless Products with Bluetooth 10

What Is IntelliMix Bar Pro? **10**

- Setup and Other Resources 11

What's in the Box **11**

IntelliMix Bar Pro Hardware Callouts **12**

IntelliMix Touch Panel Hardware Callouts **14**

How to Set Up an IntelliMix Bar Pro Kit **15**

- Pre-Deployment Checklist 15
- Step 1: Install Devices 16
- Step 2: Connect Devices 18
- Step 3: Follow Guided Setup 19

Updating Firmware **20**

Accessing the Device Web Application **20**

- Enable/Disable the Web User Interface 20

Device Settings **20**

- Audio Settings and Monitoring 21
- Video Settings 21
- Accessibility and Lights 22
- Tools 22
- Network Settings 23

Setting Up the 802.1X Protocol **23**

- Turn Off or Clear 802.1X Settings 24
- Change 802.1X Settings 24
- Troubleshooting 802.1X Setup Issues 24

Claiming Devices in ShureCloud **25**

Troubleshooting **25**

Additional Resources **26**

- Mounting Instructions 27

Specifications **41**

- IntelliMix Bar Pro Specifications 41
- IntelliMix Touch Panel Specifications 45

Certifications **46**

- Regulatory Model Number (RMN) 46
- FCC / IC ID 46
- Environmental Regulatory Information 46
- Certification and Compliance Markings 47

IntelliMix Bar Pro Kit
IntelliMix™ Bar Pro

Update Firmware

For the best experience, update the firmware before using the system, and keep your devices up to date.

To update firmware, go to `Device Settings` > `Firmware Update` after installing, pairing, and rebooting your devices. Get more information on initial firmware updates here, or find complete product information at shure.com

Safety and Regulatory Information for Wireless Products

Important Note

The complete Regulatory Notices for this product are available online. For complete Regulatory Information for your product, please check the soft copy of the product user guide at http://www.shure.com/en-US/docs.

Explanation of Symbols

⚠	This symbol indicates that dangerous voltage constituting a risk of electric shock is present within this unit.
⚠	This symbol indicates that there are important operating and maintenance instructions in the literature accompanying this unit.

Important Safety Instructions

1. READ these instructions.
2. KEEP these instructions.
3. HEED all warnings.
4. FOLLOW all instructions.
5. DO NOT use this apparatus near water.
6. CLEAN ONLY with dry cloth.
7. DO NOT block any ventilation openings. Allow sufficient distances for adequate ventilation and install in accordance with the manufacturer's instructions.
8. DO NOT install near any heat sources such as open flames, radiators, heat registers, stoves, or other apparatus (including amplifiers) that produce heat. Do not place any open flame sources on the product.
9. DO NOT defeat the safety purpose of the polarized or grounding type plug. A polarized plug has two blades with one wider than the other. A grounding type plug has two blades and a third grounding prong. The wider blade or the third prong are provided for your safety. If the provided plug does not fit into your outlet, consult an electrician for replacement of the obsolete outlet.
10. PROTECT the power cord from being walked on or pinched, particularly at plugs, convenience receptacles, and the point where they exit from the apparatus.
11. ONLY USE attachments/accessories specified by the manufacturer.
12. USE only with a cart, stand, tripod, bracket, or table specified by the manufacturer, or sold with the apparatus. When a cart is used, use caution when moving the cart/apparatus combination to avoid injury from tip-over.

13. UNPLUG this apparatus during lightning storms or when unused for long periods of time.
14. REFER all servicing to qualified service personnel. Servicing is required when the apparatus has been damaged in any way, such as power supply cord or plug is damaged, liquid has been spilled or objects have fallen into the apparatus, the apparatus has been exposed to rain or moisture, does not operate normally, or has been dropped.
15. DO NOT expose the apparatus to dripping and splashing. DO NOT put objects filled with liquids, such as vases, on the apparatus.
16. The MAINS plug or an appliance coupler shall remain readily operable.
17. The airborne noise of the Apparatus does not exceed 70dB (A).
18. Apparatus with CLASS I construction shall be connected to a MAINS socket outlet with a protective earthing connection.
19. To reduce the risk of fire or electric shock, do not expose this apparatus to rain or moisture.
20. Do not attempt to modify this product. Doing so could result in personal injury and/or product failure.
21. Operate this product within its specified operating temperature range.
22. Follow local regulations and consult qualified personnel if the product installation or relocation requires construction work. Choose mounting hardware and an installation location that can support the weight of the product. Avoid locations subject to constant vibration. Use the required tools to install the product properly. Inspect the product periodically.
23. If your product has a feature to log in, upon first time start up, you must change your password.

WARNING:

- Voltages in this equipment are hazardous to life. No user-serviceable parts inside. Refer all servicing to qualified service personnel. The safety certifications do not apply when the operating voltage is changed from the factory setting.
- If water or other foreign objects enter the inside of the device, fire or electric shock may result.

Products with AC Adapters

1. Use only AC adapter that is provided with your product.
2. If this product is powered by an AC adapter other than the AC adapter that comes with your product, it could result in personal injury and/or product failure.

This equipment is not suitable for use in locations where children are likely to be present.

This symbol represents protective earth or protective ground and should not be disconnected.

Important Product Regulatory Information

EMC conformance testing is based on the use of supplied and recommended cable types. The use of other cable types may degrade EMC performance.

Regulatory Information for Class A EMC Products

EU Class A Warning

This is a Class A product. In a domestic environment this product may cause radio interference in which case the user may be required to take adequate measures.

CE Notice

Hereby, Shure Incorporated declares that this product with CE Marking has been determined to be in compliance with European Union requirements.

The full text of the EU declaration of conformity is available at the following site: https://www.shure.com/en-EU/support/declarations-of-conformity.

UKCA Notice

Hereby, Shure Incorporated declares that this product with UKCA Marking has been determined to be in compliance with UKCA requirements.

The full text of the UK declaration of conformity is available at the following site: https://www.shure.com/en-GB/support/declarations-of-conformity.

Cybersecurity STATEMENT OF COMPLIANCE

Product Type: Relevant connectable products defined as internet-connectable products or network-connectable products, in line with inter alia Product Security and Telecommunications Infrastructure Act 2022.

Manufacturer Statement: We, Shure Incorporated, certify and declare as manufacturer under our sole responsibility, that the above-mentioned product(s) conform(s) to the legislation as mentioned under Attachment 1 – to Cybersecurity Statement of Compliance listed here: https://www.shure.com/en-GB/about-us/security.

Information on how to report security issues: The latest version of Shure's Disclosure policy can be found at the following link: https://www.shure.com/en-GB/about-us/security

Security update periods: Shure provides support regarding hardware and software updates that continue the integral cyber security safety of Shure products up to 24 months after end of life (AEOL). For the full statement regarding Shure's product support policy, and information regarding products end of life status information can be found at the following link: https://www.shure.com/en-GB/about-us/security

Manufacturer:
Shure Incorporated 5800 Touhy Avenue
Niles, Illinois, 60714-4608 U.S.A. Website: www.Shure.com.

Technical documentation is kept at:
Shure Incorporated, Corporate Global Compliance Engineering Division

UK Importer/Representative:
Shure UK Limited
Unit 2, The IO Centre, Lea Road, Waltham Abbey, Essex, EN9 1AS, U.K.

Phone: +44 (0)1992 - 703058
Email: EMEAsupport@shure.de

On behalf of Manufacturer:

Chad Ayers
08 May 2025 Niles, Illinois
Senior Director, Global Compliance

FCC Notice

This product has been tested and found to comply with the limits for a Class A digital device pursuant to Part 15 of the FCC Rules. These limits are designed to provide reasonable protection against harmful interference when the equipment is operated in a commercial environment. This product generates, uses, and can radiate radio frequency energy and, if not installed and used in accordance with the manufacturer's instruction manual, may cause harmful interference with radio communications. Operation of this product in a residential area is likely to cause harmful interference, in which case you will be required to correct the interference at your own expense.

This device complies with Part 15 of the FCC Rules. Operation is subject to the following two conditions:

1. This device may not cause harmful interference.
2. This device must accept any interference received, including interference that may cause undesired operation.

Notice: The FCC regulations provide that changes or modifications not expressly approved by Shure Incorporated could void your authority to operate this equipment.

For information regarding responsible party and other matters relating to FCC compliance, please contact Shure Incorporated, 5800 W. Touhy Avenue, Niles, Illinois 60714-4608 U.S.A. shure.com/contact

Canada, ISED Notice

Notice: The Industry Canada regulations provide that changes or modifications not expressly approved by Shure Inc. could void your authority to operate this equipment.

This Class A digital apparatus complies with Canadian ICES-003. Cet appareil numérique de la classe A est conforme à la norme NMB-003 du Canada.

KCC Notice

이 기기는 업무용 환경에서 사용할 목적으로 적합성평가를 받은 기기로서 가정용 환경에서 사용하는 경우 전파간섭의 우려가 있습니다.

BSMI Notice

警告：

為避免電磁干擾，本產品不應安裝或使用於住宅環境。

CNCA Notice

警告使用者： 此为A级产品。在生活环境中，该产品可能会造成无线电干扰。在这种情况下，可能需要用户对其干扰采取切实可行的措施。

Regulatory Information for Wireless Products

This equipment complies with FCC radiation exposure limits set forth for an uncontrolled environment. End user must follow the specific operating instructions for satisfying RF exposure compliance. This transmitter must not be co-located or operating in conjunction with any other antenna or transmitter.

This equipment complies with FCC radiation exposure limits set forth for an uncontrolled environment. This equipment should be installed and operated with minimum distance 20 cm between the radiator & your body.

This equipment complies with ISED radiation exposure limits set forth for an uncontrolled environment. End user must follow the specific operating instructions for satisfying RF exposure compliance. This transmitter must not be co-located or operating in conjunction with any other antenna or transmitter.

Cet équipement est conforme aux limites d’exposition aux rayonnements ISED établies pour un environnement non contrôlé. L’utilisateur final doit suivre les instructions spécifiques pour satisfaire les normes. Cet émetteur ne doit pas être co-implanté ou fonctionner en conjonction avec toute autre antenne ou transmetteur.

This equipment complies with ISED radiation exposure limits set forth for an uncontrolled environment. End user must follow the specific operating instructions for satisfying RF exposure compliance. This transmitter must not be co-located or operating in conjunction with any other antenna or transmitter. The antenna(s) must be installed such that a minimum separation distance of 20 cm is maintained between the radiator (antenna) and all persons at all times.

Cet équipement est conforme aux limites d’exposition aux rayonnements ISED établies pour un environnement non contrôlé. L’utilisateur final doit suivre les instructions spécifiques pour satisfaire les normes. Cet émetteur ne doit pas être co-implanté ou fonctionner en conjonction avec toute autre antenne ou transmetteur. La ou les antennes doivent être installées de telle façon qu'une distance de séparation minimum de 20 cm soit maintenue entre le radiateur (antenne) et toute personne à tout moment.

Additional Canadian information on RF exposure also can be found at the following Web address: http://www.ic.gc.ca/eic/site/smt-gst.nsf/eng/sf08792.html

ANATEL Notice

Este equipamento não tem direito à proteção contra interferência prejudicial e não pode causar interferência em sistemas devidamente autorizados. Para maiores informações, consulte o site da ANATEL – http://www.anatel.gov.br.

IFETEL Notice

La operación de este equipo está sujeta a las siguientes dos condiciones: (1) es posible que este equipo o dispositivo no cause interferencia perjudicial y (2) este equipo o dispositivo debe aceptar cualquier interferencia, incluyendo la que pueda causar su operación no deseada.

KCC Notice

해당 무선설비는 전파혼신 가능성이 있으므로 인명안전과 관련된 서비스는 할 수 없음.

이 기기는 전파법에 따라 과학기술정보통신부장관의 허가를 받고 운용하여야 합니다.

NBTC Notice

เครื่องโทรคมนาคมและอุปกรณ์นี้มีความสอดคล้องตามมาตรฐานหรือข้อกำหนดทางเทคนิคของ กสทช.

NCC Notice

Connection and use of this communications equipment is permitted by the Nigerian Communications Commission.

SRRC Notice

（一）本产品符合“微功率短距离无线电发射设备目录和技术要求”的具体条款和使用场景；

（二）不得擅自改变使用场景或使用条件、扩大发射频率范围、加大发射功率（包括额外加装射频功率放大器），不得擅自更改发射天线；

（三）不得对其他合法的无线电台（站）产生有害干扰，也不得提出免受有害干扰保护；

（四）应当承受辐射射频能量的工业、科学及医疗（ISM）应用设备的干扰或其他合法的无线电台（站）干扰；

（五）如对其他合法的无线电台（站）产生有害干扰时，应立即停止使用，并采取措施消除干扰后方可继续使用；

（六）在航空器内和依据法律法规、国家有关规定、标准划设的射电天文台、气象雷达站、卫星地球站（含测控、测距、接收、导航站）等军民用无线电台（站）、机场等的电磁环境保护区域内使用微功率设备，应当遵守电磁环境保护及相关行业主管部门的规定。

WIRELESS Regulatory Information for LE-LAN (2.4GHz and 5GHz)

WARNING:

This device is restricted to indoor use only.

WARNING:

- the device for operation in the band 5150–5250 MHz is only for indoor use to reduce the potential for harmful interference to co-channel mobile satellite systems;
- for devices with detachable antenna(s), the maximum antenna gain permitted for devices in the bands 5250-5350 MHz and 5470-5725 MHz shall be such that the equipment still complies with the e.i.r.p. limit;
- for devices with detachable antenna(s), the maximum antenna gain permitted for devices in the band 5725-5850 MHz shall be such that the equipment still complies with the e.i.r.p. limits as appropriate; and
- users should also be advised that high-power radars are allocated as primary users (i.e. priority users) of the bands 5250-5350 MHz and 5650-5850 MHz and that these radars could cause interference and/or damage to LE-LAN devices.

MIC Notice

運用に際しての注意

この機器の使用周波数帯では、電子レンジ等の産業･科学･医療用機器のほか工場の製造ライン等で使用されている移動体識別用の構内無線局（免許を要する無線局）及び特定小電力無線局（免許を要しない無線局）並びにアマチュア無線局（免許を要する無線局）が運用されています。

1. この機器を使用する前に、近くで移動体識別用の構内無線局及び特定小電力無線局並びにアマ　チュア無線局が運用されていないことを確認して下さい。
2. 万一、この機器から移動体識別用の構内無線局に対して有害な電波干渉の事例が発生した場合には、 速やかに使用周波数を変更するか又は電波の発射を停止した上、下記連絡先にご連絡頂き、混　信回避のための処置等（例えば、パ―ティションの設置など）についてご相談して下さい。
3. その他、この機器から移動体識別用の特定小電力無線局あるいはアマチュア無線局に対して有害な電波干渉の事例が発生した場合など何かお困りのことが起きたときは、保証書に記載の販売代　理店または購入店へお問い合わせください。代理店および販売店情報は Shure 日本語ウェブサイト　http://www.shure.co.jp でもご覧いただけます。

日本の電波法および電気通信事業法準拠。本デバイスは日本の電波法および電気通信事業法に基づく認証を受けています。本デバイスを改造しないでください（改造すると認証番号は無効になります）。

本製品が 5GHz 帯で使用するチャンネルは、下記の W52 、 W53 、 W56 の 3 タイプです。

タイプ	チャンネル番号	周波数
W52	36	5,180 MHz
	40	5,200 MHz
	44	5,220 MHz
	48	5,240 MHz
W53	52	5,260 MHz
	56	5,280 MHz
	60	5,300 MHz
	64	5,320 MHz
W56	100	5,500 MHz
	104	5,520 MHz
	108	5,540 MHz
	112	5,560 MHz
	116	5,580 MHz
	120	5,600 MHz
	124	5,620 MHz
	128	5,640 MHz
	132	5,660 MHz
	136	5,680 MHz
	140	5,700 MHz

W52 と W53 の帯域の電波は屋内でのみ使用可能です。

現品表示記号について

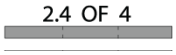

現品表示記号は、以下のことを表しています。 この無線機器は 2.4GHz 帯の電波を使用し、変調方式は「 DS-SS 」方式および「 FH-SS 」方式、想定与干渉距離は 40m です。 2,400MHz ～ 2,483.5MHz の全帯域を使用し、移動体識別装置の帯域を回避することはできません。

現品表示記号について

現品表示記号は、以下のことを表しています。 この無線機器は 2.4GHz 帯の電波を使用し、変調方式は「その他」の方式、想定与干渉距離は 80m です。 2,400MHz～ 2,483.5MHz の全帯域を使用し、移動体識別装置の帯域を回避することはできません。

NCC Notice

1. 取得審驗證明之低功率射頻器材，非經核准，公司、商號或使用者均不得擅自變更頻率、加大功率或變更原設計之特性及功能。低功率射頻器材之使用不得影響飛航安全及干擾合法通信；經發現有干擾現象時，應立即停用，並改善至無干擾時方得繼續使用。前述合法通信，指依電信管理法規定作業之無線電通信。低功率射頻器材須忍受合法通信或工業、科學及醫療用電波輻射性電機設備之干擾。
2. 應避免影響附近雷達系統之操作。
3. 高增益指向性天線只得應用於固定式點對點系統。

Regulatory Information for Wireless Products with Bluetooth

MIC Notice

運用に際しての注意

この機器の使用周波数帯では、電子レンジ等の産業･科学･医療用機器のほか工場の製造ライン等で使用されている移動体識別用の構内無線局（免許を要する無線局）及び特定小電力無線局（免許を要しない無線局）並びにアマチュア無線局（免許を要する無線局）が運用されています。

1. この機器を使用する前に、近くで移動体識別用の構内無線局及び特定小電力無線局並びにアマ　チュア無線局が運用されていないことを確認して下さい。
2. 万一、この機器から移動体識別用の構内無線局に対して有害な電波干渉の事例が発生した場合には、 速やかに使用周波数を変更するか又は電波の発射を停止した上、下記連絡先にご連絡頂き、混　信回避のための処置等（例えば、パ―ティションの設置など）についてご相談して下さい。
3. その他、この機器から移動体識別用の特定小電力無線局あるいはアマチュア無線局に対して有害な電波干渉の事例が発生した場合など何かお困りのことが起きたときは、保証書に記載の販売代　理店または購入店へお問い合わせください。代理店および販売店情報は Shure 日本語ウェブサイト　http://www.shure.co.jp でもご覧いただけます。

現品表示記号について

現品表示記号は、以下のことを表しています。 この無線機器は 2.4GHz 帯の電波を使用し、変調方式は「FH-SS」方式、想定与干渉距離は 10m です。 2,400MHz～2,483.5MHz の全帯域を使用し、移動体識別装置の帯域を回避することはできません。

What Is IntelliMix Bar Pro?

IntelliMix Bar Pro is an all-in-one videobar, which natively runs conferencing software without requiring an external PC.

The IntelliMix Bar Pro Kit includes the IntelliMix Touch Panel, a touchscreen device meant to function as a control interface for an in-room audio/video conferencing system.

1. IntelliMix Bar Pro (with connected displays)
2. IntelliMix Touch Panel
3. Corporate network

Setup and Other Resources

- Set up the IntelliMix Bar Pro Kit
- Microsoft Teams deployment overview
- IntelliMix Bar Pro Kit mounting instructions
- IntelliMix Bar Pro Kit troubleshooting

What's in the Box

Videobar

1. IntelliMix Bar Pro
2. Wall mounting kit
3. Universal power supply with attached 3 ft. (1 m) DC cable
4. 3 ft. (1 m) AC power cord (multiple cables included for regional variants)
5. 5.9 ft. (1.8 m) content ingest USB-C cable
6. 10 ft. (3 m) Ethernet cable
7. 6 ft. (2 m) HDMI cables (2)
8. Camera cover set
9. Audio output terminal block connector
10. Cable covers and cable ties
11. Allen wrench

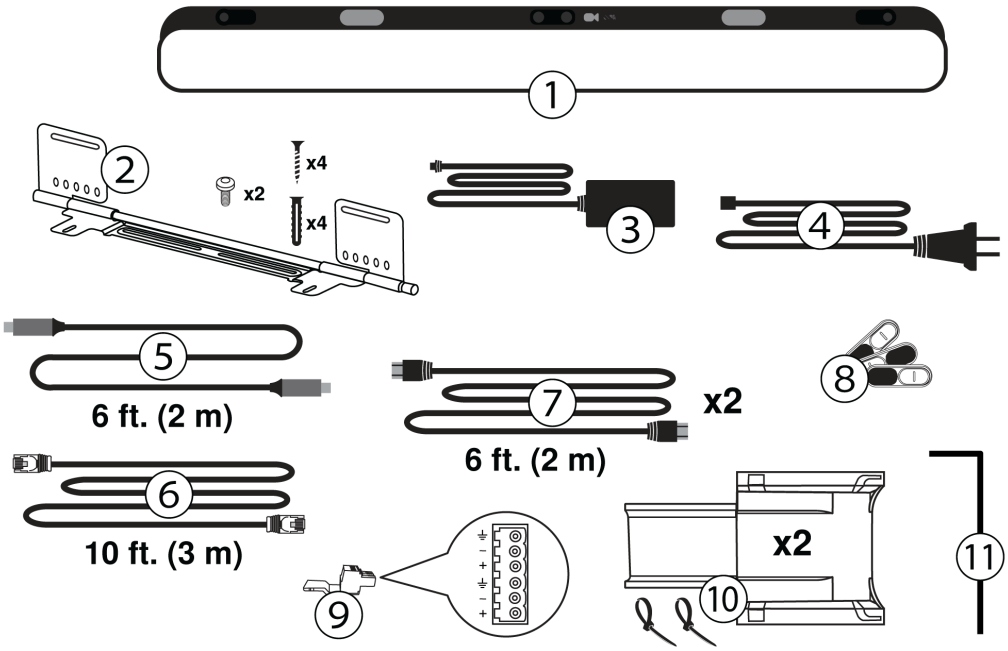

Touch Panel:

1. IntelliMix Touch Panel
2. PoE Injector (100V–240V AC)
3. 10 ft. (3 m) Ethernet cable
4. 3 ft. (1 m) AC power cord (multiple cables included for regional variants)

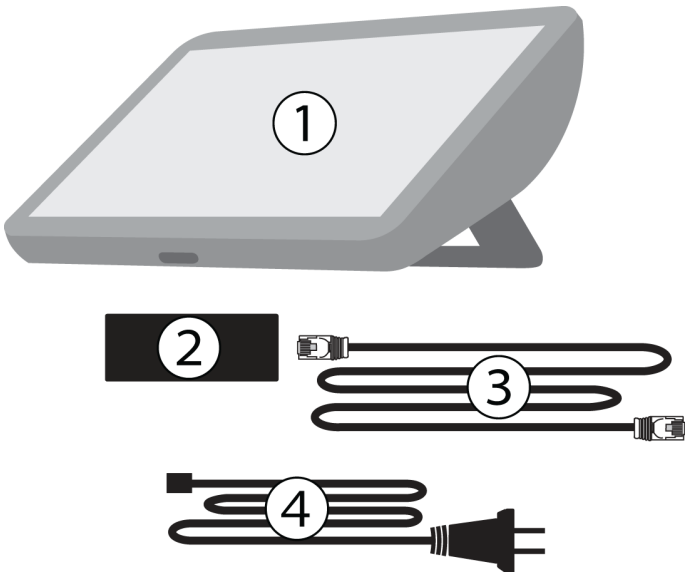

IntelliMix Bar Pro Hardware Callouts

The IntelliMix Bar Pro is an all-in-one networked audio/video conferencing solution.

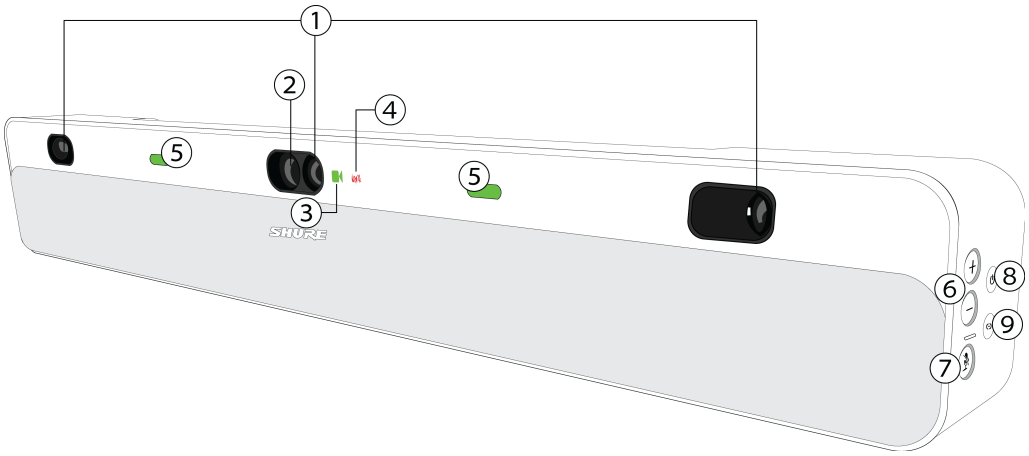

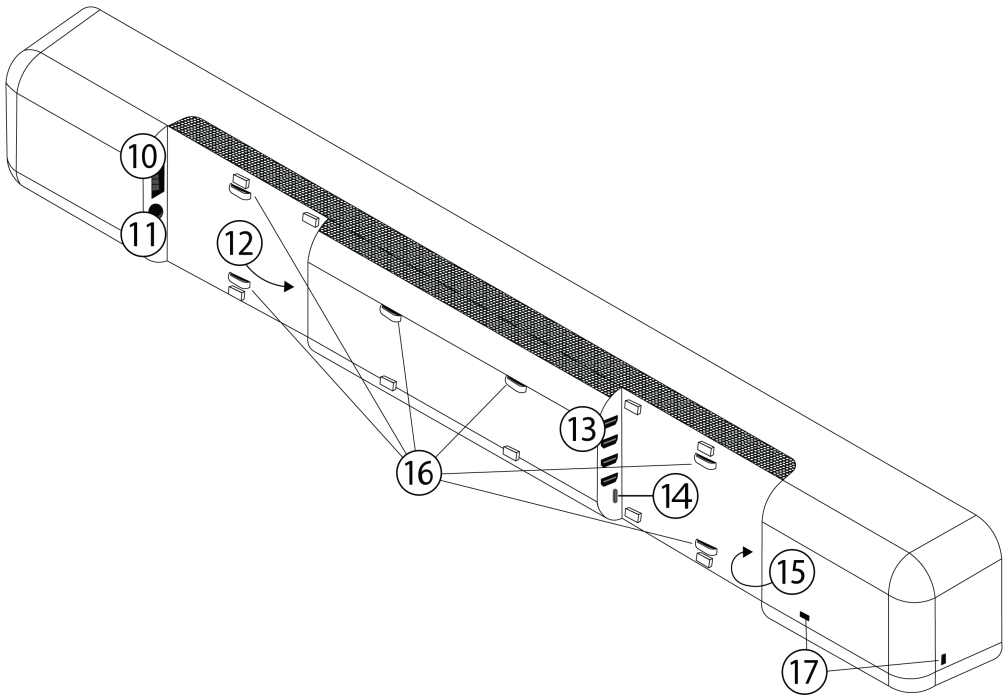

1. Telephoto cameras
2. Wide-angle camera
3. Camera On LED
4. Privacy LEDs
5. Microphone mute LEDs
6. Volume controls
7. Microphone mute button
8. Power button
9. Link button (reserved for future use)
10. Stereo analog output block connector
11. DC power supply input
12. USB-A 3.0 (2×), USB-C (2×)
13. HDMI ports (3× HDMI outputs for front-of-room displays* + 1× HDMI input)
14. USB-C / DP (Display Port) content ingest

15. RJ45 ports (1 LAN port, 4× Shure PoE+ expansion ports)
16. Cable tie stays
17. Kensington security slots

* Platform-dependent

IntelliMix Touch Panel Hardware Callouts

The IntelliMix Bar Pro is an all-in-one networked audio/video conferencing solution.

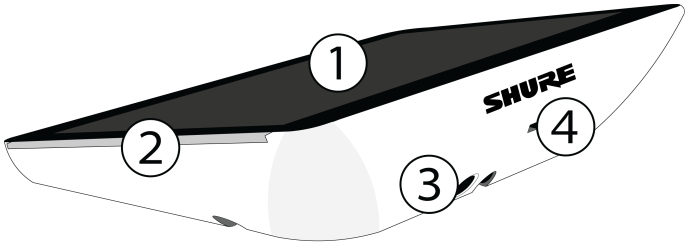

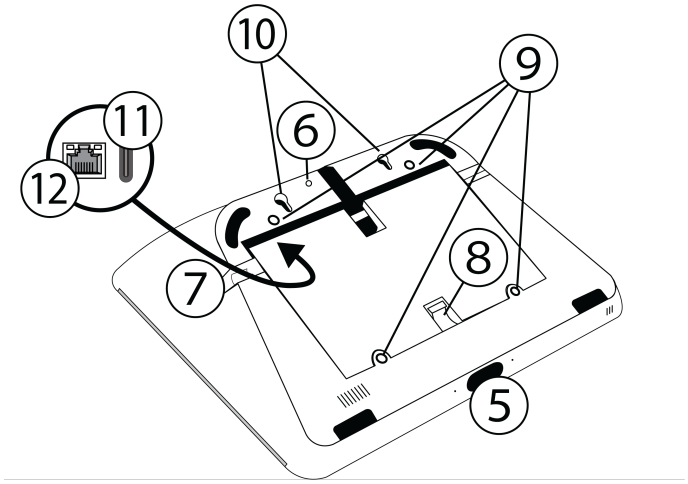

1. Touchscreen display
2. LED multifunction indicator
3. Mounting lock release pin button
4. Kensington security slot
5. Passive infrared (PIR) motion sensor
6. Mounting lock pin
7. Cable routing channels (underneath kickstand)

   To route cables, loosen the cable strain relief bracket plate using a PH1 Phillips screwdriver

8. Kickstand release
9. Vesa 100mm threaded mounting screw holes
10. Keyhole mounts
11. Debug port
12. RJ45 port for LAN & PoE+

How to Set Up an IntelliMix Bar Pro Kit

Pre-Deployment Checklist

Before you install an IntelliMix Bar Pro Kit, complete these tasks for a successful deployment.

Pre-Deployment Checklist for IntelliMix Bar Pro Kits

Task	Requirements	More Details
Purchase a Microsoft Teams Rooms license	When you set up the room, you'll be asked for the account email address and password to sign in.	Microsoft Teams Rooms licensing overview
Prepare your network	Required RJ45 network connections (with internet access) IntelliMix Bar Pro: 1× network connection IntelliMix Touch Panel: 1× network connection See Step 2 for connection diagrams. You should also review required ports, protocols, and firewall changes for Microsoft Teams Rooms and IntelliMix Room.	Get your network ready for Microsoft Teams Required firewall changes for IntelliMix Room software
Plan for cable runs and power for each room	Required power connections: IntelliMix Bar Pro: AC power IntelliMix Touch Panel: PoE+ See Step 2 for connection diagrams.	Shure provides all required cables for IntelliMix Bar Pro Kits, but you may need cables that are longer or shorter to fit the room.

Microsoft provides more guidance about Teams Rooms:

- Overview of planning, deploying, and managing Microsoft Teams Rooms
- Prepare your environment for Teams Rooms
- Microsoft Teams Rooms on Windows device security

Recommended Display Settings

For best results, use these settings for front-of-room displays connected to an IntelliMix Bar Pro:

- Connect your display to HDMI Input 1 whenever possible, as this provides best HDMI-CEC support and frequency sync capabilities.
- Turn off any automatic power-off or automatic standby features.
- Turn off the display's eco settings.

These settings ensure that front-of-room displays turn on when Microsoft Teams Rooms wakes. Consult your display manufacturer's documentation or these sources for more guidance:

- Microsoft Teams Rooms documentation

Step 1: Install Devices

IntelliMix Bar Pro includes a wall mounting bracket and hardware kit.

1. Use the included screws to attach the bracket to the wall. If you're not installing on a stud, use the included anchors. Always follow local building codes and regulations.
2. Fold out the bottom plate perpendicular to the wall.

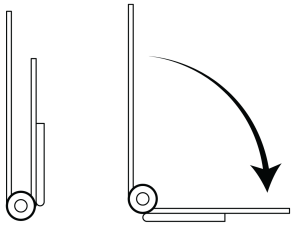

3. Use the included screws to secure the bottom plate to the IntelliMix Bar Pro's internally-threaded screw holes. Snug with included wrench. Do not overtighten.

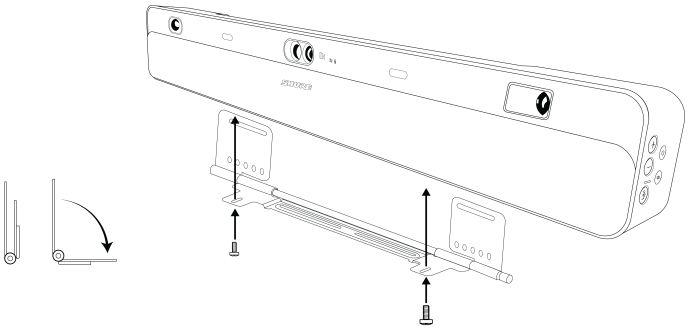

The back panel on the IntelliMix Touch Panel conceals the cable routes and connectors. If needed, the back panel can function as an integrated kickstand for tabletop placement.

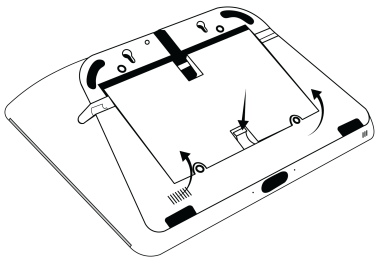

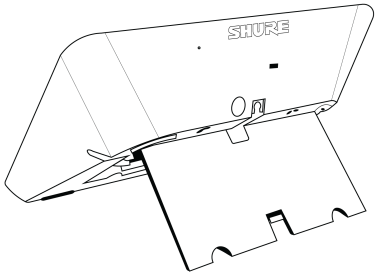

Additional mounting methods are available depending on the needs of your room:

- Pivot wall mount installation
- Display mount bracket installation
- Credenza mount installation
- Touch Panel mount kit installation

Cable Routing Diagrams

Using the cable ties and cable covers, route your cables from the IntelliMix Bar Pro as needed for your installation:

Cables Upward

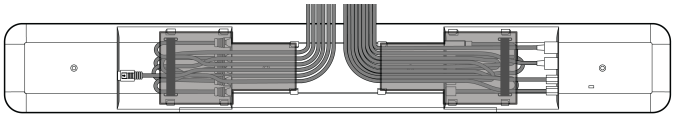

Cables Downward

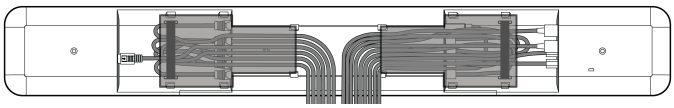

Cables Into Wall

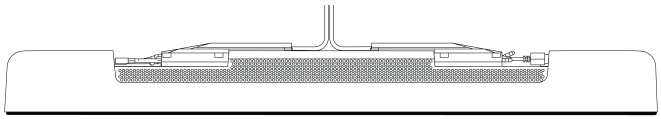

Step 2: Connect Devices

Use the provided cables to connect the IntelliMix Bar Pro to AC power, your network, and your conferencing displays—starting with HDMI Out 1.

If you have Power-Over-Ethernet (PoE+) built into your network switch, connect your IntelliMix Touch Panel directly to receive network and power. If you don’t have PoE+, connect the included PoE injector to a standard power outlet, connect the Touch Panel to the OUT port, and connect the IN port to your network.

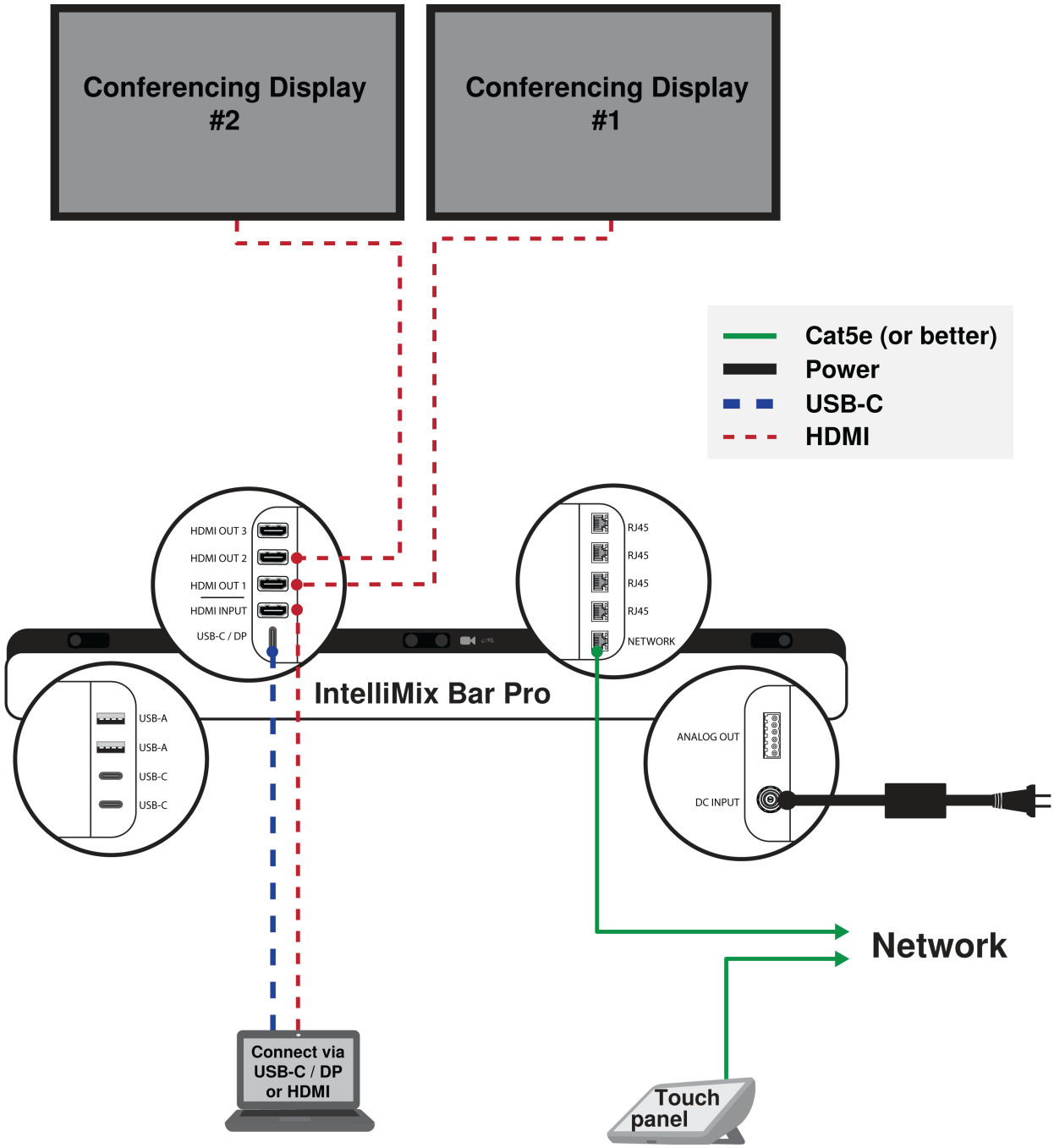

Step 3: Follow Guided Setup

Power on your IntelliMix Bar Pro, IntelliMix Touch Panel, and connected conferencing displays.

Follow the guided setup on the IntelliMix Touch Panel screen to select your language, set your date and time, pair to the desired IntelliMix Bar Pro on the same network, and set an admin password for your system.

Be sure to securely record the admin password for future reference. If the admin password is lost, the device must be factory-reset to set a new one.

Reboot both devices after pairing.

If you don't have access to an IntelliMix Touch Panel, complete the setup on the IntelliMix Bar Pro by connecting a USB mouse and following the instructions on your connected conferencing display. Connecting a touch panel after setting up the videobar automatically syncs your setup information.

Updating Firmware

Firmware is embedded software in each component that controls functionality. After installation, you must update the devices before first use. On the Touch Panel, go to ☼ > `Device Settings` > `Firmware Update` and press the Check for updates button, or open the Properties sidebar of the IntelliMix Bar Pro web UI. Enter your admin password, then press Send Updates to update your system.

Periodically, new versions of firmware are developed to incorporate additional features and enhancements. For the best experience, always install the latest available firmware version.

A reboot may be needed before the initial firmware update.

CAUTION! Ensure the device has a stable network connection during the update. Do not turn off any device until the update is complete.

Accessing the Device Web Application

The IntelliMix Bar Pro's web application allows you to control advanced device settings directly from the videobar. To access the web application, enter the video bar's IP address in a web browser on a computer connected to the same network.

To find the IP address of the video bar:

1. Press and hold the plus and minus buttons on the side panel of the IntelliMix Bar Pro for 5 seconds. Device IP address is read out over the videobar speakers, and device information is shown on the connected conferencing display.
2. If an IntelliMix Touch Panel is connected, go to ☼ > `System Settings` > `About` > `Front of room` to view the video bar's IP address.

For more help, refer to our step-by-step video about HTTPS web applications.

Enable/Disable the Web User Interface

The IntelliMix Bar Pro web user interface is disabled by default to restrict access to the browser-based control software. The device can still be managed, and the web UI can be re-enabled, from a paired IntelliMix Touch Panel.

Enable/Disable from the Touch Panel

Go to `Settings` > `Services` to enable or disable the web UI.

Disable from the Videobar

Open the videobar's web UI, go to `Network` > `Services` and click the Web UI Accessibility toggle to disable the web UI.

The web UI can only be re-enabled from a linked Touch Panel.

Device Settings

The IntelliMix Bar Pro is pre-tuned and certified at default settings, which are recommended for most situations. To adjust settings to your preference, access the device settings on the Touch Panel, or through videobar's web application.

Audio Settings and Monitoring

The Audio tab of the IntelliMix Bar Pro control software features real-time audio monitoring and general settings:

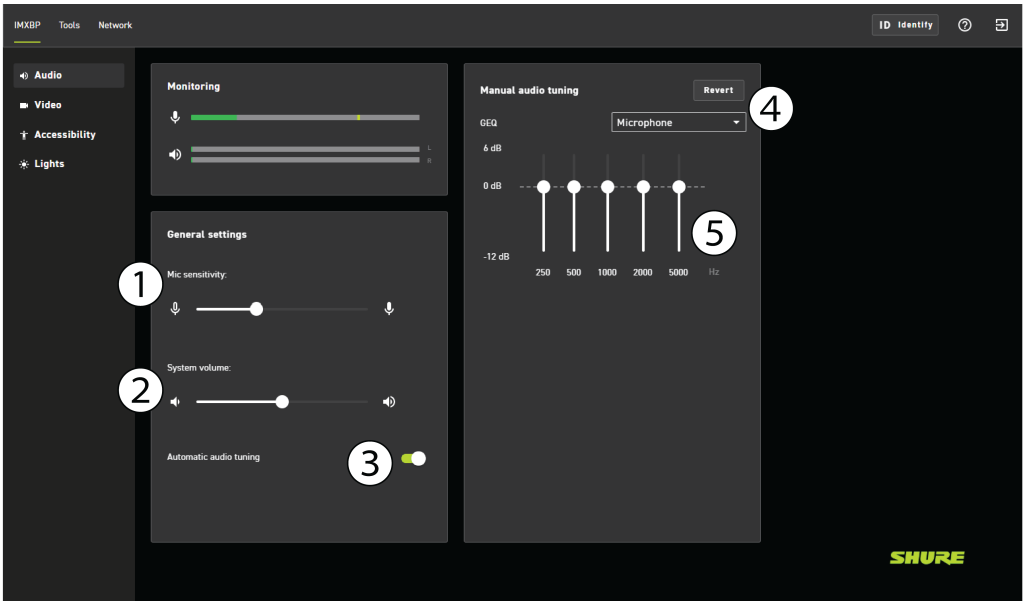

1. **Mic sensitivity** adjusts the microphone input signal at the start of your meeting, before any signal processing. The default mic sensitivity for the IntelliMix Bar Pro has been tested and certified for normal use in most situations. If your input signal is too low or too high at the start of your meeting, use the microphone audio monitor to help adjust sensitivity.
2. **System volume** adjusts the audio coming out of the speakers at the start of your meeting, before any signal processing. The default volume has been tested and certified for normal use in most situations. If your system volume is too low or too high at the start of your meeting, use the speaker audio monitor to help offset the output volume.
3. **Automatic Audio Tuning** toggles between automatic and manual DSP configuration. When switched off, the Manual audio tuning panel appears.
4. **Microphone / Speaker** switches between which audio signal the DSP applies to. Revert restores all DSP settings to default values.
5. **GEQ** (Graphic Equalizer) allows adjustment of 5 separate frequency response bands. The EQ has been pre-tuned and certified at default settings, which are recommended for most situations. To adjust the sound to your preference, ensure the box to activate the desired equalizer band, then use the slider to boost or cut that frequency. Reset returns the selected band to default (0 dB).

   GEQ is available for both the Microphone and Speaker.

Video Settings

IntelliMixBar Pro uses pre-trained assistive AI technology to provide the best possible near-end video quality for your room, call, and network connection.

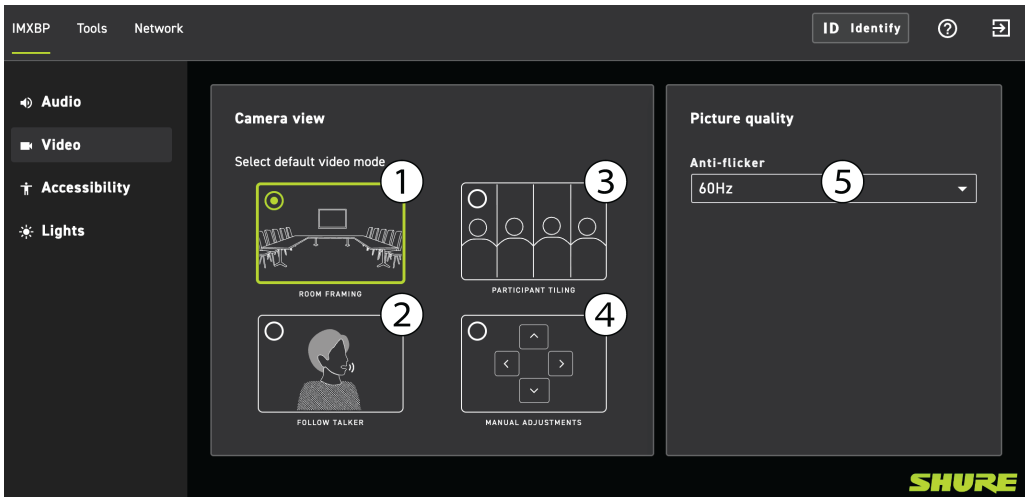

1. **Room Framing** displays only the area of the room where participants are seated.
2. **Participant Tiling** leverages the videobar's separate cameras to create a grid of individual shots of each participant, up to 4. For more than 4 participants, the camera view reverts to Room Framing.
3. **Follow Talker** tracks the 4 most recent active participants. If a talker moves around the room, the cameras follow.
4. **Manual Adjustments** allows direct control of the shot, either from a connected keyboard or the Touch Panel.
5. **Picture quality** helps compensate for any display flickering from ambient light fixtures by offering selectable anti-flicker at 50Hz or 60Hz.

Accessibility and Lights

The Accessibility settings offer high-contrast and color-correction modes for visually-impaired users.

The Lights panel allows configuration of the IntelliMixBar Pro LED behavior, along with a real-time visual representation of each change.

Tools

Access the Room Environment dashboard through the Tools menu. View room temperature, humidity, and occupancy data as available directly on your conferencing display.

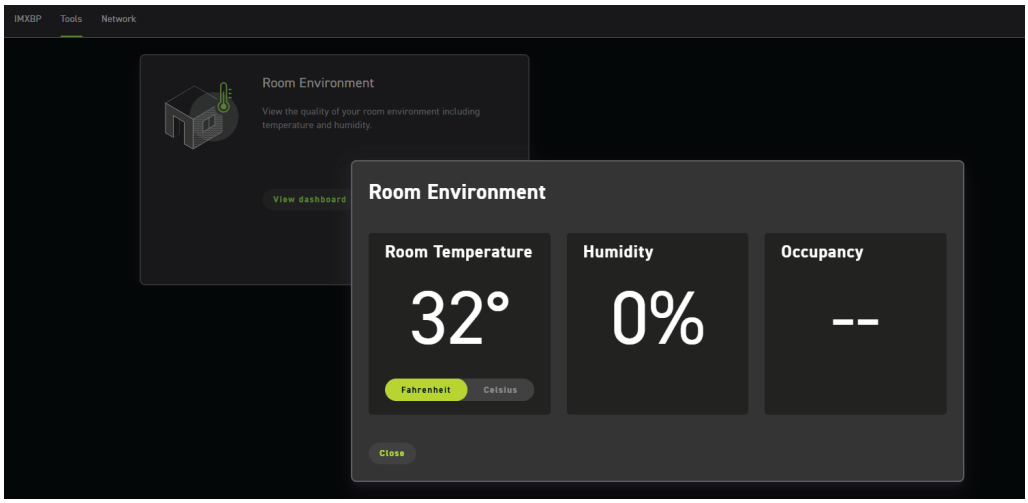

Network Settings

The Network tab offers connectivity settings, security options, and general information about your system.

- **General** information and settings shows the model and serial number, and allows you to set the device name, timezone, and system language.
- **Firmware** displays the current version information on your videobar. Updates can be initiated from the device UI when connected to a network, or from ShureCloud once the device is claimed and activated.
- **Wireless** settings let you toggle Wi-Fi and Bluetooth connectivity on or off.
- **IP configuration** allows automatic or manual IPv4 and DNS configuration, and displays the device's MAC address.
- **Services** includes toggles for ShureCloud Connection and the Web UI.

  Disabling the WebUI will prevent access to the web application running at the current IP address.

- **802.1X** allows you to set up and edit your security protocol configuration.
- **Factory reset** provides options to reboot the device, clear any custom device configuration settings, or to restore the device to factory defaults.

Setting Up the 802.1X Protocol

The IntelliMix Bar Pro and IntelliMix Touch Panelsupport the IEEE 802.1X port access protocol for network authentication. The 802.1X protocol must be configured on both devices.

To set up 802.1X, you will need:

- Details about your authentication server's EAP method
- Any required credentials or certificates for that method, for example:
  - MD5 and PWD
    1. User ID and passphrase
  - TLS and PEAP
    1. User ID and passphrase
    2. Certificate (with certificate types) in the .PEM format
- Any passwords to access the devices if they are password locked

Setting up 802.1X is a two-part process.

Step 1: Configure Settings on Test Network

1. Connect the device to a test network that *does not* have 802.1X enabled and open the device's web application.
2. Set a device password if desired.
3. Go to `Network` > `802.1X` on the Videobar, or `Network` & `Internet` > `Ethernet` on the Touch Panel.

   Note: *EAP methods that require certification must be configured via the Videobar; the Touch Panel only supports methods that do not require certification.*

4. Choose your EAP method from the menu.
5. Enter any required credentials and load any necessary certificates.
6. Select Save to save the 802.1X settings to the device.
7. Enable 802.1X.

Step 2: Connect to a Credentialed Network

1. Connect your device to the credentialed network.
2. Verify that you can open the device's web application. If you can't open the web application, reconnect to the test network and check all 802.1X settings for the selected EAP method.

Turn Off or Clear 802.1X Settings

You can turn off 802.1X settings temporarily, or clear them from the device. Open the device and go to `Settings` > `Network` > `802.1X`

- **Disable**: Click the 802.1X switch and reboot the device to turn off 802.1X settings. Click the switch again to enable 802.1X.
- **Clear**: Click Clear 802.1X settings and reboot the device to remove 802.1X settings from the device.

Note: Resetting to factory default clears all 802.1X settings.

Change 802.1X Settings

You may need to change a device's 802.1X settings if the enterprise's 802.1X settings are changing. The best way to do this is to change the 802.1X settings on the devices, and then make changes to the authentication server.

To change device settings:

1. While still connected to the credentialed network, open the device's web application and go to `Network` > `802.1X`.
2. Make changes and click Save.
3. Make any required changes to the authentication server.
4. Reboot your devices. The devices should connect to the credentialed network with the updated 802.1X settings.

Troubleshooting 802.1X Setup Issues

If you can't access the device's web application on the credentialed network, there may be a problem with the device's 802.1X settings. To troubleshoot, take the device off the credentialed network and connect it to the test network. You can make any necessary changes to the 802.1X settings, and then reconnect to the credentialed network.

If you attempt to enable 802.1X on a device, but the authentication fails, you will see this notification:

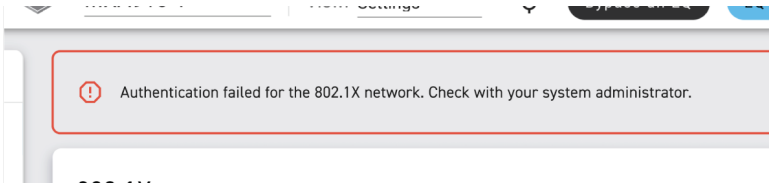

If this occurs, check with your system administrator.

Claiming Devices in ShureCloud

Use ShureCloud to remotely monitor and update firmware for IntelliMix Bar Pro Kit devices.

To quickly claim the IntelliMix Bar Pro and IntelliMix Touch Panel in ShureCloud, scan the QR code, located on the packaging or on the back of the device, and follow the prompts on your device's screen.

The IntelliMix Bar Pro and IntelliMix Touch Panel must be claimed separately.

See the ShureCloud user guide for detailed instructions on getting started with ShureCloud.

Troubleshooting

IntelliMix Bar Kit Troubleshooting

Problem	Solution
Unable to claim IntelliMix Bar Pro or IntelliMix Touch Panel in ShureCloud, or a claimed device is in “Pending” status	First, ensure that the devices are powered on and have an active internet connection. Next, ensure that the Shure Cloud Connection setting has not been disabled from the IntelliMix Touch Panel or from the Web UI of either device. Changing this setting will apply the change to both of the paired devices. From the IntelliMix Touch Panel, turn on Shure Cloud connection under `Device Settings` > `Admin` > `Services` > `Shure Cloud connection`. From the Web UI: Turn onConnect to Shure Cloud under `Network` > `Services`. See also: Getting started withShureCloud.
IntelliMix Bar Pro or IntelliMix Touch Panel are not paired	First, ensure that the devices are powered on and have an active internet connection. For the best experience, it is suggested that the paired devices do not utilize segregated or client-isolated networks. Ensure that both devices are signed into the Microsoft Teams Room resource correctly. Reboot both devices. Again, verify Microsoft Teams sign-in on both devices.

Problem	Solution
	If the IntelliMix Bar Pro and IntelliMix Touch Panel are still not paired, perform a Factory Reset of both devices. See also: Microsoft Teams Room management and resource accounts.
No picture is shown on the conferencing display(s)	Ensure that the conferencing display(s) is powered on. Check and ensure that HDMI output connections from the IntelliMix Bar Pro begin by utilizing HDMI OUT 1, followed by HDMI OUT 2 for additional displays. It is also recommended to use HDMI INPUT 1 on the conferencing displays. See also: Recommended Display Settings.
Display doesn't turn on when the touch panel wakes the system	Check and adjust your display's settings. See also: Recommended Display Settings.
Can’t access the web UI	Ensure your computer is on the same subnet as your videobar, and that you have added the `https://` prefix before typing in the correct IP address of the Bar Pro. Also, check that the Web UI has not been disabled in the touch Panel under `Settings` > `Services`.

Additional Resources

- Shure Knowledge Base FAQs
- Command strings for Shure devices
- IP Ports and Protocols for Shure Devices
- Firewall Rules for Shure Software Applications
- Shure API documentation
- Shure Enterprise Networking Troubleshooting Checklist
- Training from Shure Academy
- Shure Collaboration & Conferencing YouTube channel

Download Shure Software

- Shure Designer
- ShureCloud
- Shure Update Utility
- Shure Discovery
- Software and firmware archive

Mounting Instructions

IntelliMix Bar Pivot Wall Mount

What's in the Box

1. Pivot wall mount bracket
2. Mounting screws (5 10-16 x 1.5 in.)
3. Drywall/concrete anchors (5 AF6)
4. Thumb screw hex (2 M5 x 8)
5. 140 mm S4 ball-end hex key wrench and 130 mm S2 hex key wrench

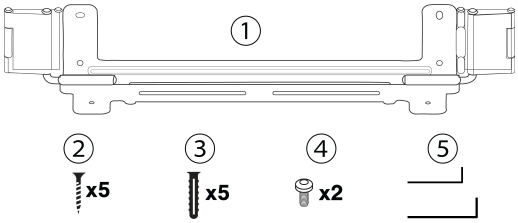

Install the Video Bar with the Pivot Wall Mount Bracket

This bracket can be installed on a wall or on the Shure A-IMXBP-DM display mount bracket to attach to a TV VESA mount.

Note: The mount has 2 lock nuts that prevent downward rotation. You must tighten them at the end of installation. Out of the box, these are set below the mount. If your application prevents access beneath the mount, remove the lock nuts and install them on top.

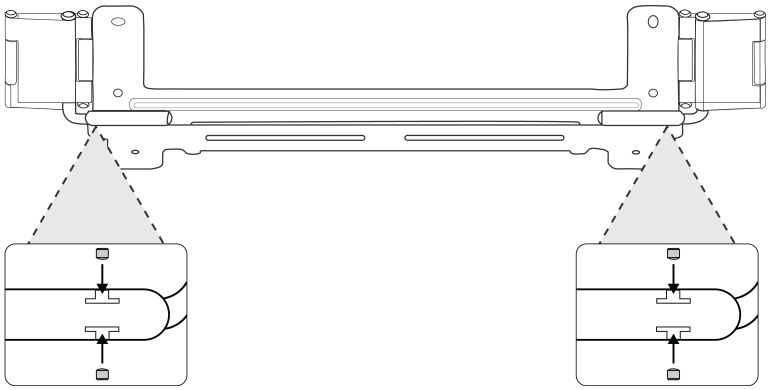

1. Secure Bracket to Wall with Mounting Screws

Rotate the bottom plate away from the wall, then use the included screws to attach the bracket to the wall. If you're not installing on a stud, use the included anchors.

Warning: If the included screws or anchors aren't appropriate for your application, use the correct screws. Follow any local regulations.

Note: You may need to loosen the lock nuts to rotate the bottom plate.

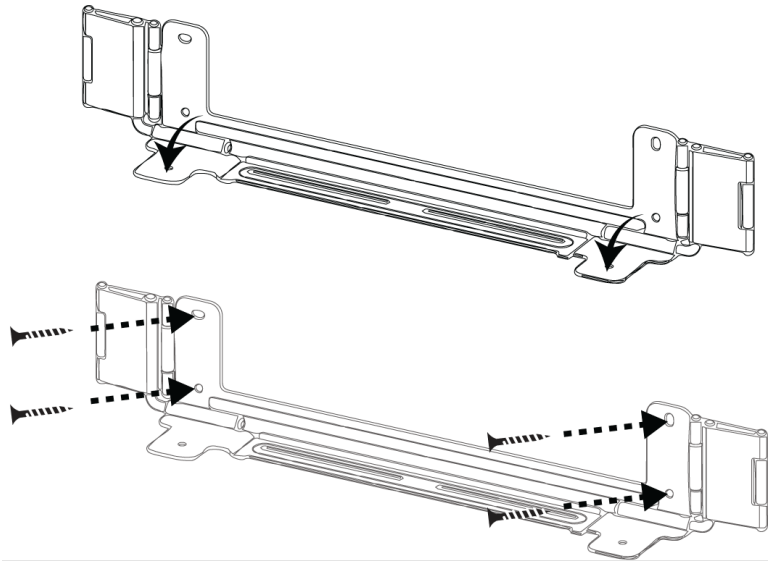

2. Mount IntelliMix Bar Pro to Bracket

Pull the bottom plate outwards.

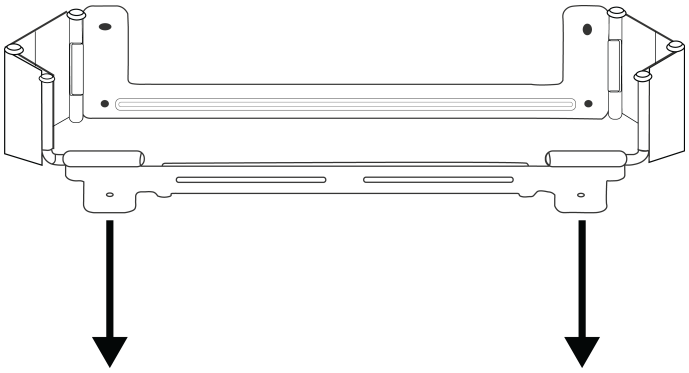

Place the IntelliMix Bar Pro on the bottom plate, and then secure it with included thumb screws.

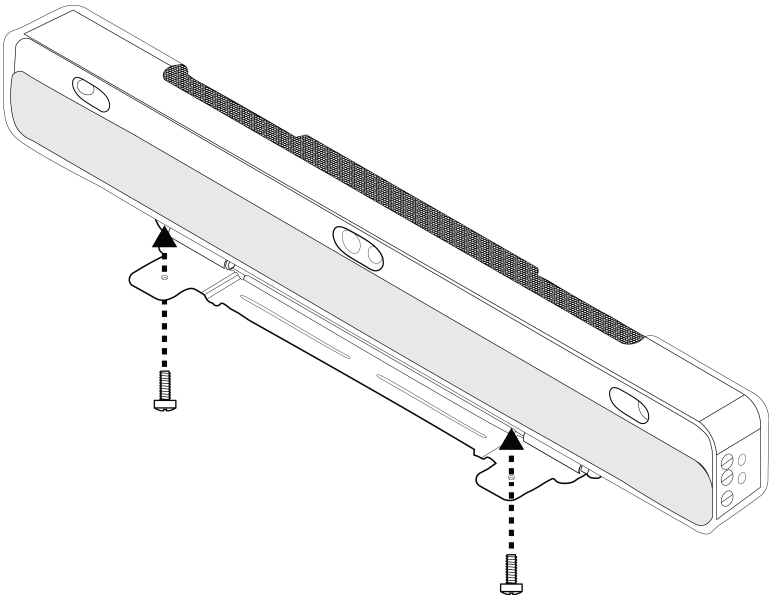

3. Rotate IntelliMix Bar and Install Cables

Rotate the IntelliMix Bar Pro downwards, away from the bracket, to install cables.

Note: You may need to loosen the lock nuts to rotate the bottom plate.

Optional: After connecting cables, secure them using the included cable ties. Route cables as needed and attach the cable cover to the back of the IntelliMix Bar Pro.

4. Re-Position IntelliMix Bar Pro

Rotate the IntelliMix Bar Pro to the appropriate angle for the desired camera view. Then tighten the wall mount lock nuts on both sides. Pivot the bracket to the appropriate position.

IntelliMix Bar Display Mount Bracket

What's in the Box

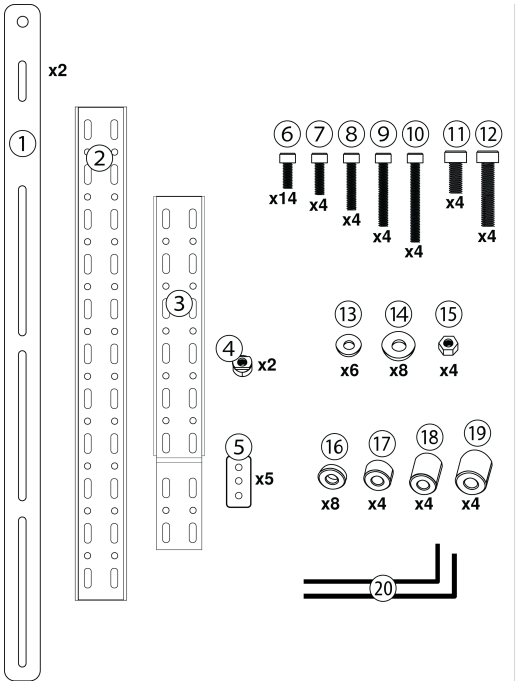

1. Connecting beams (757 × 40 × 2.5 mm)
2. Horizontal crossbeam (550 × 56 × 9 mm)
3. Crossbeam extension (390 × 56 × 9 mm)
4. Anti-rotation nut (2)
5. Rectangular nut (5)
6. M6-16 screws (14)
7. M6-20 screws (4)
8. M6-30 screws (4)
9. M6-40 screws (4)
10. M6-50 screws (4)
11. M8-18 screws (4)
12. M8-40 screws (4)
13. ∅6-1.6 washers (6)
14. ∅8-2.5 washers (8)
15. M6 hex nut (4)
16. ∅6-5 spacers (8)
17. ∅6-10 spacers (4)
18. ∅6-20 spacers (4)
19. ∅8-20 spacers (4)
20. Ball-end Allen keys (S5 and S6)

Not Listed: A-IMXBP-WM wall-mount bracket (included with IntelliMixBar Pro)

Install the Display Mount

Important: Ensure screen bracket is secured to your display properly according to manufacturer instructions. Use screen bracket extension if needed.

The display mount attaches the IMXBP-WM wall mount bracket, included with your IntelliMixBar Pro, either to the back of your TV, or onto your existing TV's mounting bracket.

Install the Display Mount on the TV Mounting Bracket

1. Attach Crossbeam to TV Bracket

Attach the horizontal crossbeam (②) to the back of your TV using 4× M6-16 screws (⑥), 4× ∅8-2.5 washers (⑭), and 2× rectangular nuts (⑤).

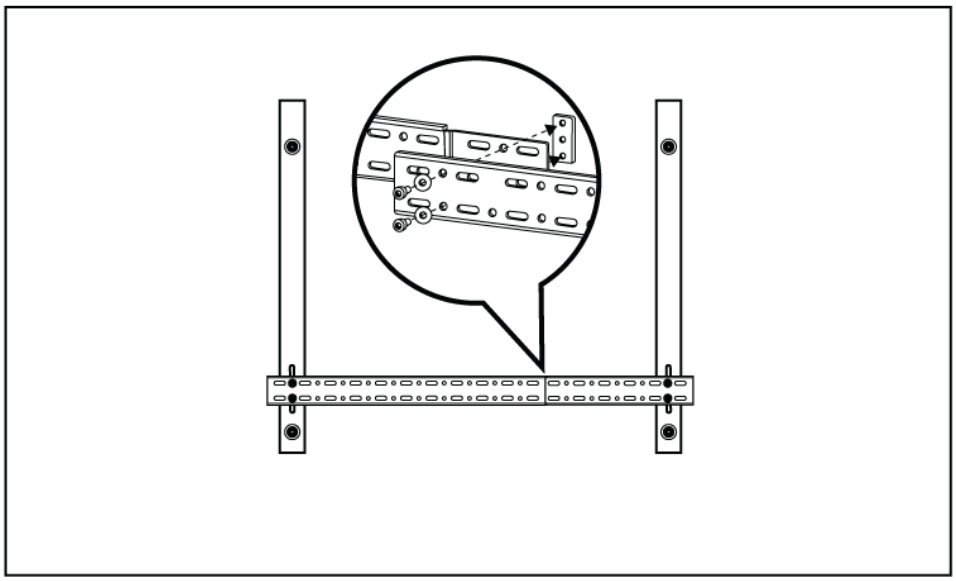

If the horizontal crossbeam is too short for the TV bracket, first attach the horizontal crossbeam to the crossbeam extension (③), using 2× M6-16 screws (⑥), 2× ∅6-1.6 washers (⑬), and 1× rectangular nut (⑤).

2. Attach Mounting Beams and Wall Mount

Line up the mounting beams (①) with both the horizontal crossbeam (②) and the wall mount.

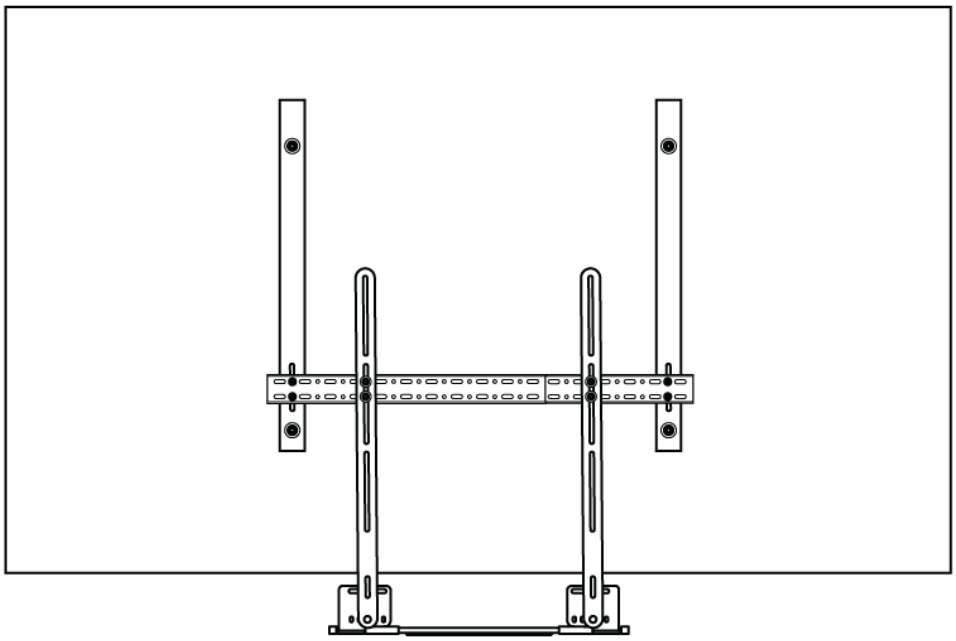

Attach the support beams using the appropriate screws, washers, spacers (if needed) and rectangular nuts. Hand-tighten using the included Allen key (⑳).

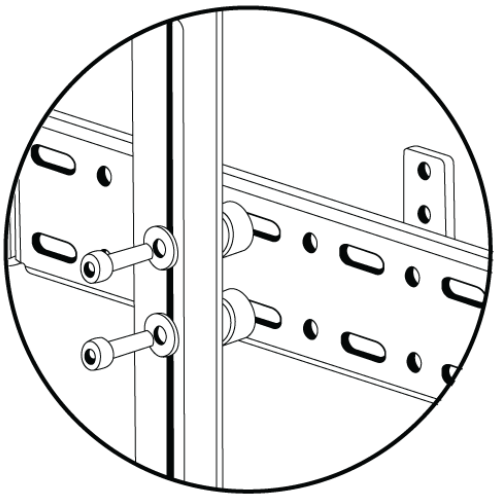

Screws	Spacers	∅8-2.5 washers (⑭)	Rectangular Nut (⑤)
M6-16 (⑥), ×4	∅6-5 (⑯), ×4 (optional)	×4	×2
M6-20 (⑦), ×4	∅6-10 (⑰), ×4	×4	×2
M6-30 (⑧), ×4	∅6-20 (⑱), ×4	×4	×2

Screws	Spacers	∅8-2.5 washers (⑭)	Rectangular Nut (⑤)
M6-40 (⑨), ×4	∅6-10 (⑰), ×4 ∅6-20 (⑱), ×4	×4	×2
M6-50 (⑩), ×4	∅6-5 (⑯), ×8 ∅6-10 (⑰), ×4 ∅6-20 (⑱), ×4	×4	×2

3. Attach Display Mount to the Wall Mount Bracket

Center the wall mount below your TV and pivot the mounting beams to align with the mount's rear plate. Use 2× anti-rotation nuts (④), 4× M6-16 screws (⑥) and 4× ∅6-1.6 washers (⑬) to secure the connecting beams to the bracket.

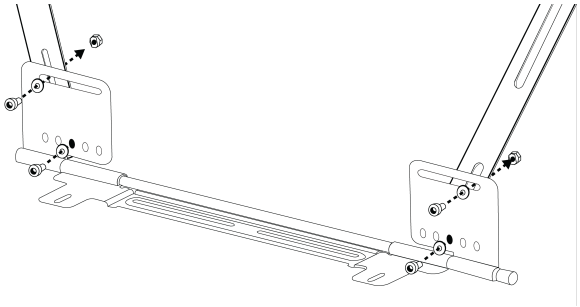

4. Install IntelliMix Bar Pro and Adjust Connections

Attach the IntelliMix Bar Pro to the mounting bracket and route all cables as needed. Adjust the main bracket to achieve desired installation effect.

Install the Display Mount on the Back of Your TV

1. Find Your Display's Appropriate Mounting Points

Place the TV flat, with the screen facing down, and place your IMXBP wall mount below it. Align the connecting beams (①) with the wall mount and the appropriate lock point positions for your display. Note which of the mounting beam's screw slots align with the display's lock points.

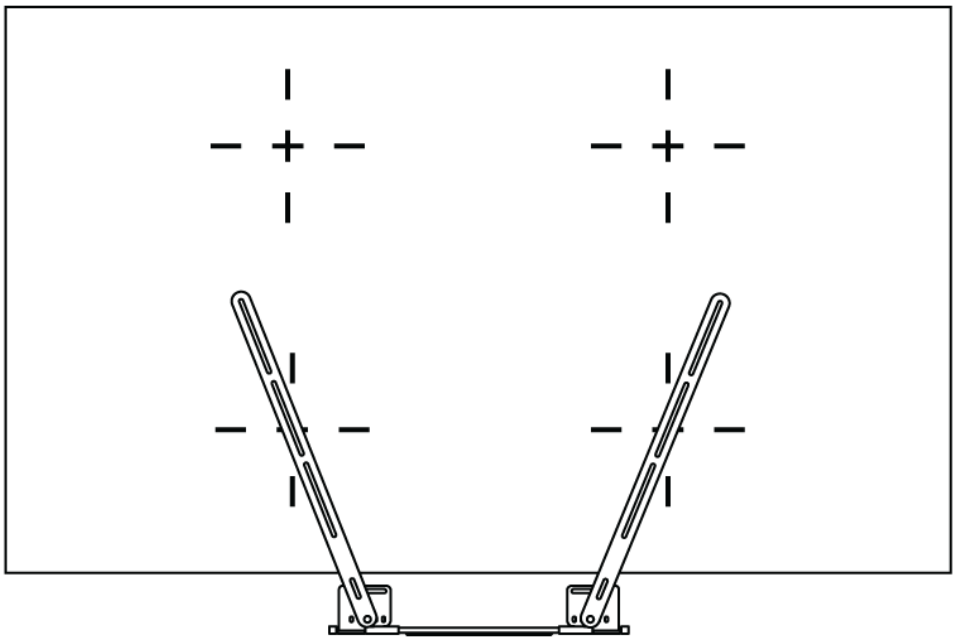

2. Attach Display Mount to Display

Align the connecting beam's screw slots and 2× ∅8-2.5 washers (⑭) with the TV's lock points.

Attach your TV's existing mounting hardware over the connecting beams, using either 4× M6-16 screws (⑥) and 4× ∅6-1.6 washers (⑬), or 4× M8-18 screws (⑪) and 4× ∅8-2.5 washers (⑭). Pass the screws through the mounting beams and washers placed earlier.

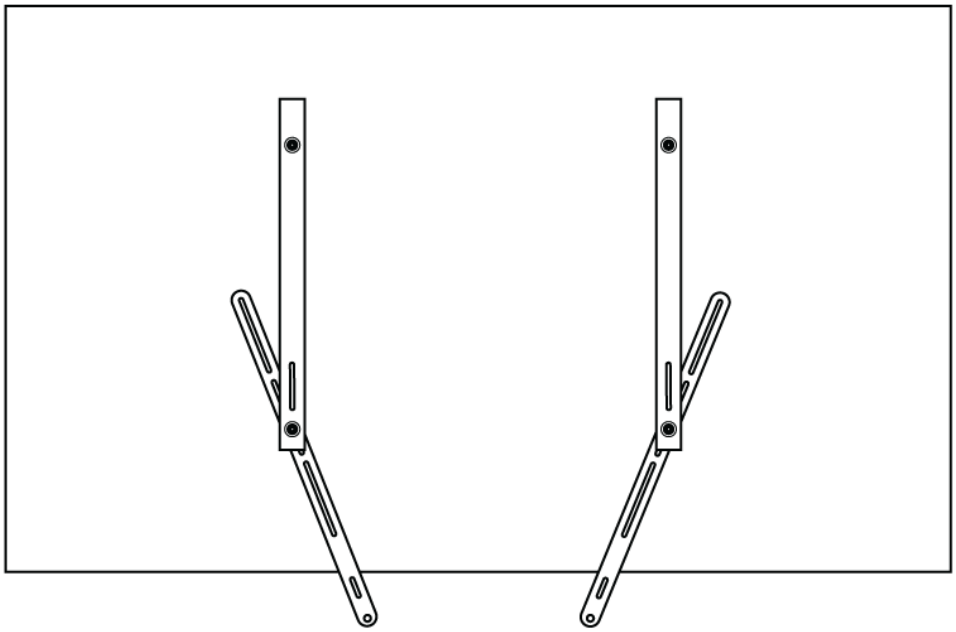

Hand-tighten screws using the included Allen wrench. Do not overtighten.

Put the TV back into the mounting bracket on the wall.

3. Attach Display Mount to the Wall Mount Bracket

Center the wall mount below your TV and pivot the mounting beams to align with the mount's rear plate. Use 2× anti-rotation nuts (④), 4× M6-16 screws (⑥) and 4× ∅6-1.6 washers (⑬) to secure the connecting beams to the bracket.

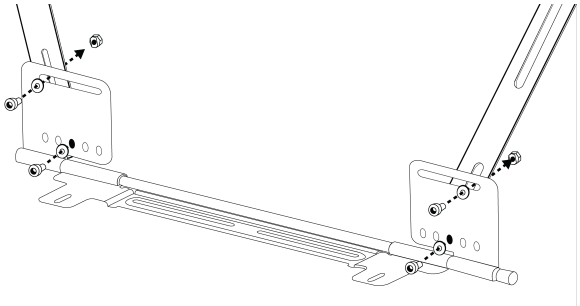

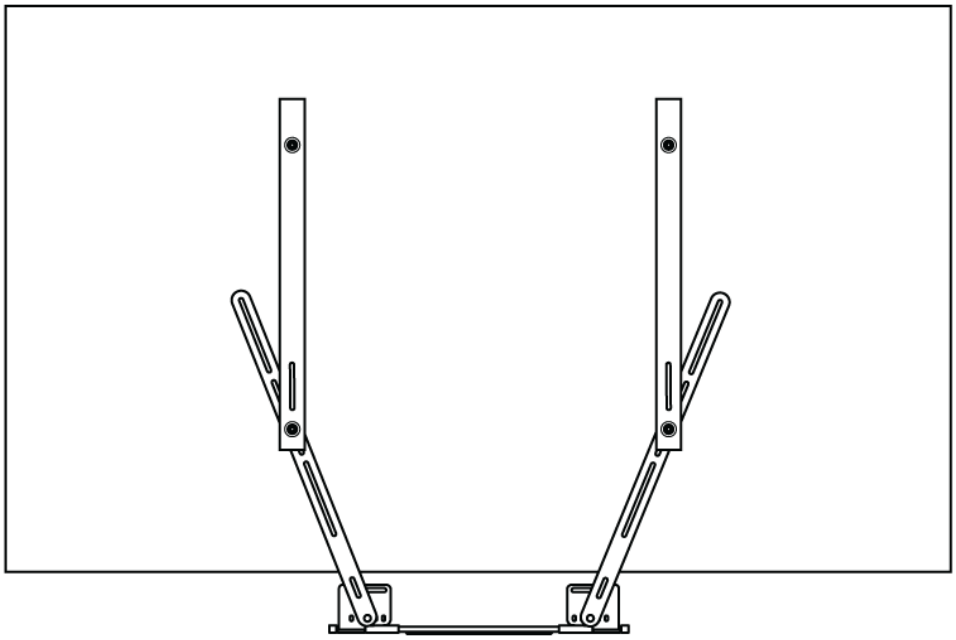

4. Install IntelliMix Bar Pro and Adjust Connections

Attach the IntelliMix Bar Pro to the mounting bracket and route all cables as needed. Adjust the main bracket to achieve desired installation effect.

IntelliMix Bar Credenza Mount

What's in the Box

1. Credenza mount feet (2)
2. Hex head thumb screws (2 M5 x 8)
3. Ball-end Allen key (140 mm S4)

Assemble the Credenza Mount

When installing the IntelliMix Bar Pro on a credenza, we recommend using these mount feet for best acoustic performance.

1. Turn the IntelliMix Bar Pro upside down and orient the mounting feet to face the front of the bar.

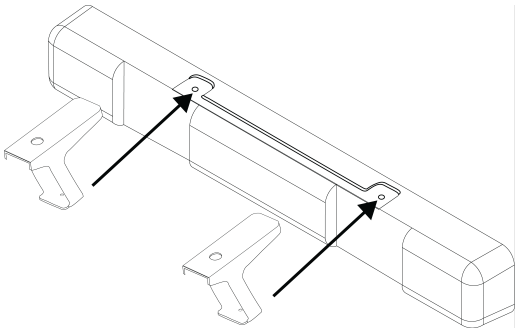

2. Place the included fixing screws through the holes in the middle of the mount foot.

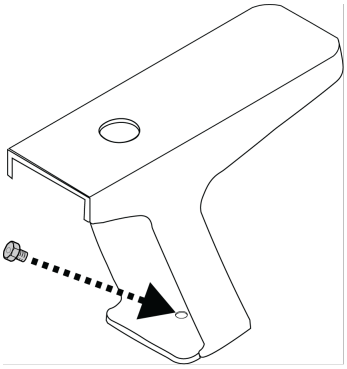

3. Secure each mount foot to the IntelliMix Bar Pro with included screws and wrench. Insert the long side of the included Allen wrench through the hole in the base of the foot to tighten the screws.

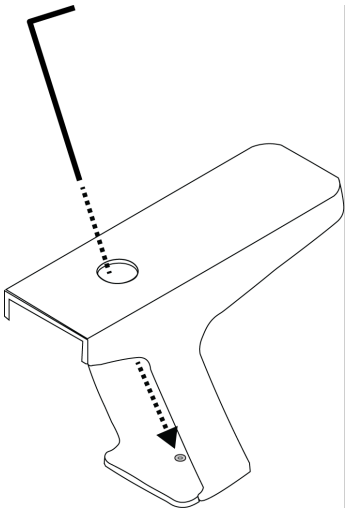

IntelliMix Touch Panel Mount Kit

Safety Warnings for Glass Surfaces

- **Avoid textured surfaces:** Mount only on smooth glass surfaces; avoid textured glass or surfaces with films or debris.
- **Clean the surface:** The glass must be clean and dry before mounting to ensure proper adhesion. Use an appropriate cleaner, like alcohol, and allow it to dry completely.
- **Monitor temperature:** Avoid mounting during extreme temperature changes and ensure the room temperature is appropriate for installation. Avoid direct sunlight. Mounting in direct sunlight can degrade the adhesive or cause extreme temperature changes, potentially causing the mount to detach.
- **Avoid touching the adhesive:** Do not touch the adhesive backing before mounting to ensure the strongest bond. To ensure the strongest possible attachment, do not put any stress or load on the bracket for at least 24 hours. For maximum bond strength, waiting up to 72 hours is recommended.

What's in the Box

1. Wall/glass mount brackets (1 black, 1 white)
2. Side mount brackets (1 black, 1 white)
3. Adhesive disc for glass mount
4. Mounting screws (4 T4 x 20) and wall anchors (4 M6 x 25)
5. Adapter screws (4 M4 x 5mm)

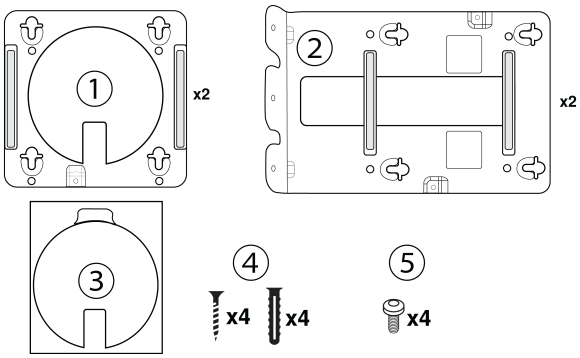

Install the Touch Panel with the Wall, Glass, Side Mount Kit

The optional mounting kit for IMXTP10 includes accessories for securing the touch panel to a wall, a glass surface, or to the side of a mounting surface, such as a doorframe.

Install the Wall Mount

1. Use the mount as a guide to drill 4 holes in the wall with a 6mm drill bit.
2. Attach the bracket to the wall with included mount screws. Make sure the damping foam strips on the bracket face you and that your orientation matches the illustration.

   Warning: If the included screws or anchors aren't appropriate for your application, use the correct screws. Follow any local regulations.

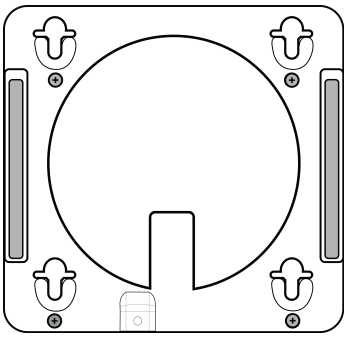

3. Fasten 4 adapter screws on the back of the touch panel.

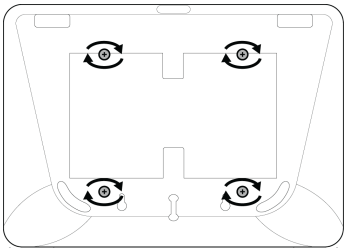

4. Mount the touch panel on the bracket by sliding the adapter screws along the bracket's U-shaped slots.

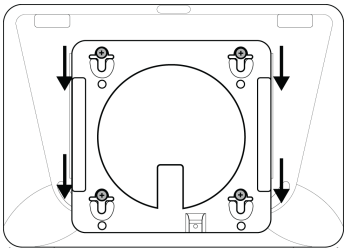

Note: To remove the touch panel from the mount, push the release button.

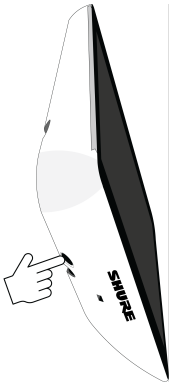

Install the Glass Mount

1. Remove the release paper from adhesive disc, then stick disc on the bracket as shown.

Important: Make sure your orientation matches the illustration.

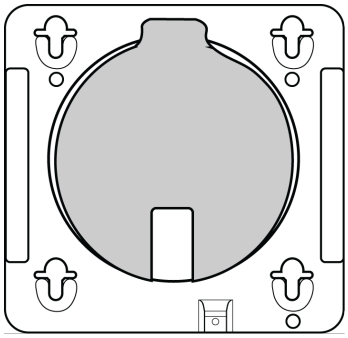

2. Remove the film from the adhesive disc. With the damping foam strips on the bracket facing you, press the bracket firmly to the glass surface for 60 seconds to attach.

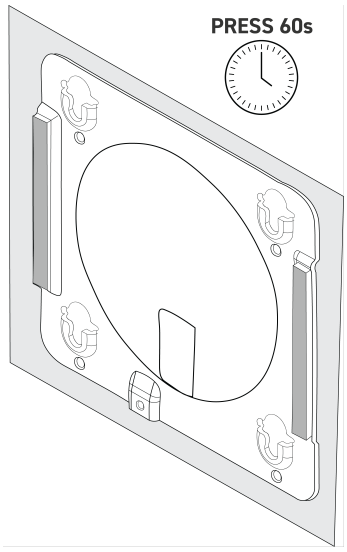

Important: Make sure the glass surface is clean and dry before applying. To ensure the strongest possible attachment, do not mount the touch panel on the bracket for at least 24 hours. For maximum bond strength, waiting up to 72 hours is recommended.

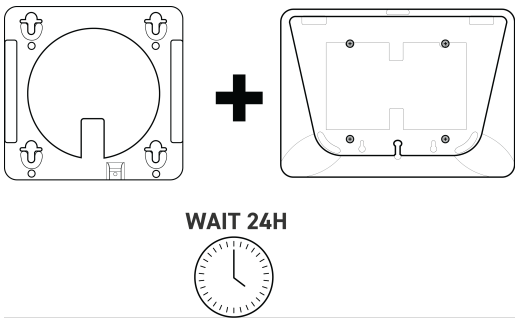

3. Fasten 4 adapter screws on the back of the touch panel.

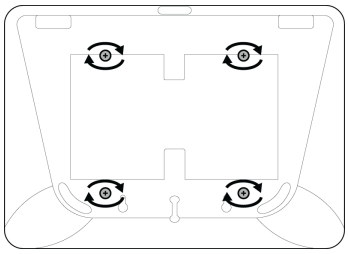

4. Mount the touch panel on the bracket by sliding the adapter screws along the bracket's U-shaped slots.

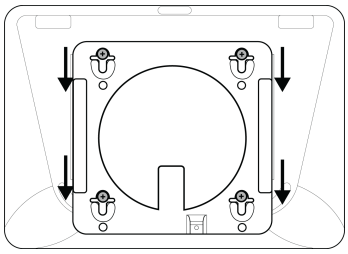

Note: To remove the touch panel from the mount, push the release button.

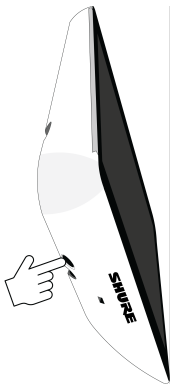

Install the Side Mount

1. Use the bracket as a guide to drill 3 holes on the desired surface with a 6mm drill bit.
2. Attach the bracket to the wall with included mount screws. Make sure the damping foam strips on the bracket face you and that your orientation matches the illustration.

   Warning: If the included screws or anchors aren't appropriate for your application, use the correct screws. Follow any local regulations.

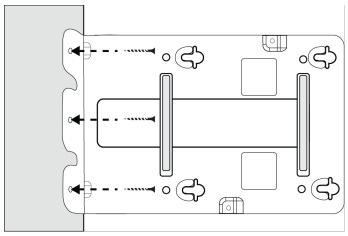

3. Fasten 4 adapter screws on the back of the touch panel.

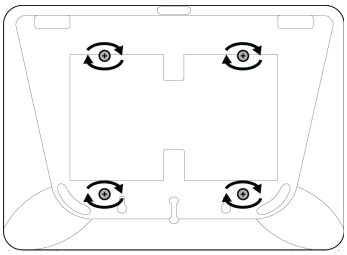

4. Mount the touch panel on the bracket by sliding the adapter screws along the bracket's U-shaped slots.

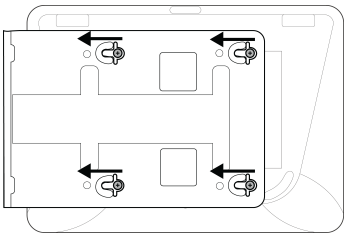

Note: To remove the touch panel from the mount, push the release button.

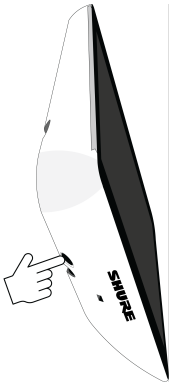

Specifications

IntelliMix Bar Pro Specifications

General

Weight	5 kg (11 lb)
Dimensions	930.0mm × 93.6mm × 122.5mm (36.22" × 3.69" × 4.82") L × W × H

Operating Temperature Range	0°C (32°F) to 35°C (95°F)
Storage Temperature Range	−30°C (−22°F) to 70°C (158°F)
OS	MDEP Android 13
RAM	12GB LPDDR5

Interfaces

Audio Expansion Ports	4x RJ45 10/100/1000 Mbps, PoE+, 802.3 concurrent support
LAN / Network	1x RJ45 10/100/1000 Mbps
HDMI In	1x, up to 4KCompatible signals: • 640 × 480p, 60fps • 1920 × 1080p, 60fps • 1280 × 720p, 60fps • 3840 × 2160p, 30fps • 1920 × 1080p, 30fps • 1280 × 720p, 30fps
HDMI Out	3x, up to 4K
USB 3.0 Type A (Accessory)	2x USB Type A connectors
USB 3.0 Type C (Accessory)	2x USB Type C connectors
USB 3.0 + DP1.2 and PD (20V, 5V) Type C (Content Ingest)	1x USB Type C connectorCompatible signals: • 640 × 480p, 60fps • 1920 × 1080p, 60fps • 1280 × 720p, 60fps • 3840 × 2160p, 30fps • 1920 × 1080p, 30fps • 1280 × 720p, 30fps
Line Out	2-channel, balanced (via block connector)
Wireless	• 802.11a/b/g/n/ac/ax • Bluetooth Low Energy (BLE) 5.4 (future use) • Bluetooth 5.2

Wireless

Bluetooth	5.2
Bluetooth Frequency Range	2402 MHz - 2480 MHz
WLAN Standard	IEEE 802.11 a/b/g/n/ac/ax
WLAN Frequency Bands	2.4 GHz, 5 GHz

Power

Power Supply	**Input**	100-240V~, 50/60Hz, 3.5A
	Output	54V, 4.6A, 248.4W
IntelliMix Bar Pro	**Input**	54V⎓4.6A
	Output EXP (1-4)	30W MAX (PoE+)
	Output USB C DP	20V⎓0.9A / 5V⎓1.5A
Power Consumption	**Without Expansion Port Use**	110W Max
	With Full Expansion Port Use	248.4W Max

Cameras

Sensor	1/1.8" CMOS

Field of View	**Horizontal**	**Left/Right/ Center**	74°
		Wide-Angle	112°
	Vertical	**Left/Right/ Center**	45°
		Wide-Angle	73°
	Diagonal	**Left/Right/ Center**	82°
		Wide-Angle	121°
Resolutions @ 30fps	4K (max)		
Aspect Ratio	16:9 (default)		

Microphones

Configuration	Shure Mic Array
Frequency Response	27 Hz to 20 kHz
Pickup Range	8.5m under normal conditions
Digital Signal Processing	Automatic mixing, acoustic echo cancellation (AEC), noise reduction, automatic gain control, compressor, delay, equalizer (5-band graphic), mute, gain

Speakers

Configuration	Dual Left/Right
Frequency Range	(−10 dB) 120 Hz to 20 kHz
Maximum Output Level @ 1m	83 dB SPL (+9dBv, 1kHv sens.)
Digital Signal Processing	Compressor, equalizer (5-band graphic)

IntelliMix Touch Panel Specifications

General

Weight	1 kg (2.2 lb)
Dimensions	60.6mm × 248.15mm × 184.0mm (2.39" × 9.77" × 7.24") H × W × D
Operating Temperature Range	0°C (32°F) to 35°C (95°F)
Storage Temperature Range	−20°C (−4°F) to 70°C (158°F)
OS	MDEP Android 13
RAM	8GB LPDDR5
Display	Touchscreen: capacitiveSurface treatment: anti-fingerprint, anti-glare

Interfaces

RJ45 (LAN/network)	1x, 10/100/1000 Mbps
USB-C	Maintenance Port - No power output
Motion Sensor	PIR sensor for automatic wake-up

Wireless

Bluetooth	5.2

Bluetooth Frequency Range	2402 MHz - 2480 MHz
WLAN Standard	IEEE 802.11 b/g/n
WLAN Frequency Bands	2.4 GHz

Power

Input	PoE+ (55V ⎓ 0.463A)
Power Consumption	< 25.5W (max)

Certifications

Regulatory Model Number (RMN)

For regulatory identification purposes your product has been assigned a regulatory model number (RMN). This regulatory model number should not be confused with product number, as below.

RMN: IMXBP	**Product Numbers:** IMX Bar Pro (IMXBP-B, IMXBP-W)

RMN: IMXTP10	**Product Numbers:** IMX Touch Panel 10" (IMXTP10-B, IMXTP10-W)

FCC / IC ID

FCC ID: DD4IMXBP

IC: 616A-IMXBP

- **Contains FCC ID:** 2AC23-WCT22
- **Contains IC:** 12290A-WCT22

Environmental Regulatory Information

Waste Electrical and Electronic Equipment (WEEE) Directive

In the European Union and the United Kingdom, this label indicates that this product should not be disposed of with household waste. It should be deposited at an appropriate facility to enable recovery and recycling.

Registration, Evaluation, Authorization of Chemicals (REACH) Directive

REACH (Registration, Evaluation, Authorization of Chemicals) is the European Union (EU) and the United Kingdom (UK) chemical substances regulatory framework. Information on substances of very high concern contained in Shure products in a concentration above 0.1% weight over weight (w/w) is available upon request.

Recycling Information

Please consider the environment, electric products and packaging are part of regional recycling schemes and do not belong to regular household waste.

中国 RoHS

部件名称	有害物质									
	Pb	Cd	Hg	Cr(VI)	PBB	PBDE	DBP	BBP	DIBP	DEHP
电路模块	X	○	○	○	○	○	○	○	○	○
金属模块	X	○	○	○	○	○	○	○	○	○
线缆及其组件	X	○	○	○	○	○	○	○	○	○
电源适配器*	X	○	○	○	○	○	○	○	○	○
锂电池组*	X	○	○	○	○	○	○	○	○	○

注 1: ○: 表示该有害物质在该部件所有均质材料中的含量均不超出电器电子产品有害物质限制使用国家标准要求。
X: 表示该有害物质至少在该部件某一均质材料中的含量超出电器电子产品有害物质限制使用国家标准要求。
注 2: 本产品大部分的部件采用无害的环保材料制造，含有有害物质的部件皆因全球技术发展水平的限制而无法实现有害物质的替代。
注 3: 以上未列出的部分,表明其有害物质含量均不超出电器电子产品有害物质限制使用国家标准要求
*:表示如果包含部分

臺灣 RoHS

Notice: Taiwan RoHS tables are provided by GC on a per-product basis.

Certification and Compliance Markings