Askar

SQA106

User's Manual

WARNING

DO NOT LOOK AT SUN THROUGH TELESCOPE.
IT WILL CAUSE IRREVERSIBLE DAMAGE TO YOUR EYES.

www.sharpstar-optics.com

English

Instructions for use

The SQA106 is an OTA with an aperture of 106mm, a focal length of 509mm, and a native focal ratio of 4.8. The SQA106 has great star performance, with excellent full-field illumination and MTF data.

The SQA106 has a quintuplet air-spaced lens design that includes 2 pieces of SD glass and supports the 55mm image circle.

The SQA106 has a Petzval self-flattened structure, which eliminates the need for additional calculation of the back focus. Between 48mm and 78mm connection distance, users can directly use it for shooting after the OTA is in focus.

The SQA106 designs a retractable dew shield, that can be pulled out or pulled in according to the actual use needs.

The SQA106's tube ring is an integrated pair of tube ring sets, with a hollow design in the middle to reduce overall weight. There are 6 M4 and M6 threaded holes on both sides of the tube ring, which are convenient for installing the base or dovetail plate and connecting different accessories. The top of the tube ring is slotted with a multifunctional finder base, which can be used to install astronomical accessories. The dovetail plate on the bottom of the tube ring is a standard Losmandy-style 300mm dovetail plate.

The SQA106 focuser is a dual-speed rack-and-pinion large 2.8-inch rigid focuser that can be compatible with most motorized focusers on the market. The focusing travel is 30 mm, and the focuser tube is engraved with high-precision scales. On both sides of the focuser, there are two finder bases.

The rear of the focuser is equipped with a 360° high-precision rotator with a precision scale to allow the user to adjust and save the angle of rotation. It is also equipped with an enlarged locking screw for easy locking even under high loads.

The end of the SQA106 is equipped with a variety of adapters, all of which are toothed and ribbed, making it easy to screw. The adapters are available in sizes M48, M54, and M68 and can be used to mount various accessories.

The SQA106 is fully CNC machined and has a fine oxidized coating, with nameplates designed on the top of the handle and the focuser.

Oxford cloth case with well-designed holes inside, extra space reserved for EAF installation.

SQA106 Specifications

Aperture: 106mm

Focal length: 509mm

Focal ratio: F4.8

Objective lens: Quintuplet petzval APO
(including two pieces of SD glass)

Format specifications: full frame (44mm)
upgrade to the medium format(55mm)

Total length: 516mm(when the dew shield is contracted);
586mm(when the dew shield is stretched)

OTA weight: 5.82kg

Total weight: 8.12kg

Rear-end thread type: M48 adapter

Accessories: a SQA106 OTA(Includes an M48 adapter), an M54 adapter, an M68 adapter, an Oxford cloth bag, an inspection list, a manual

Product Size Diagram

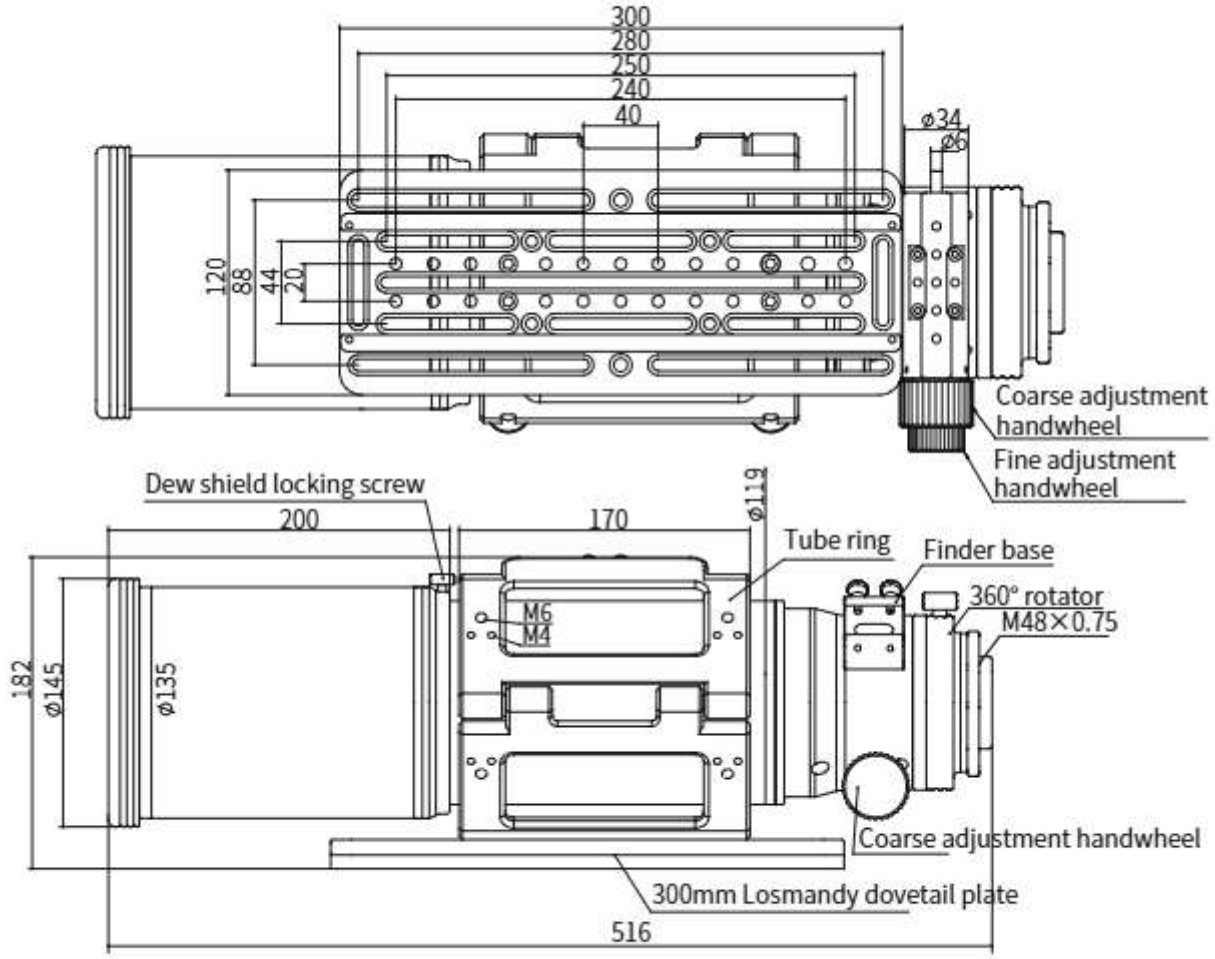

The Focuser Locking Screw Position Diagram

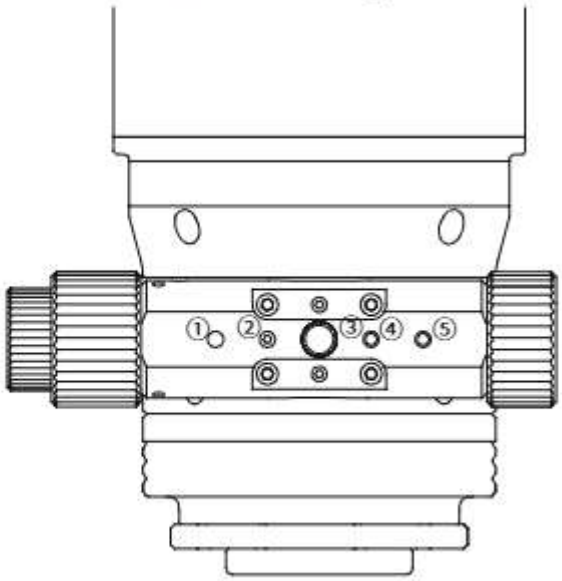

②Bottom Load Adjustment Screw

③Bottom Locking Screw

①③④⑤can be used for electric focusing bracket installation

Steps of Installing EAF

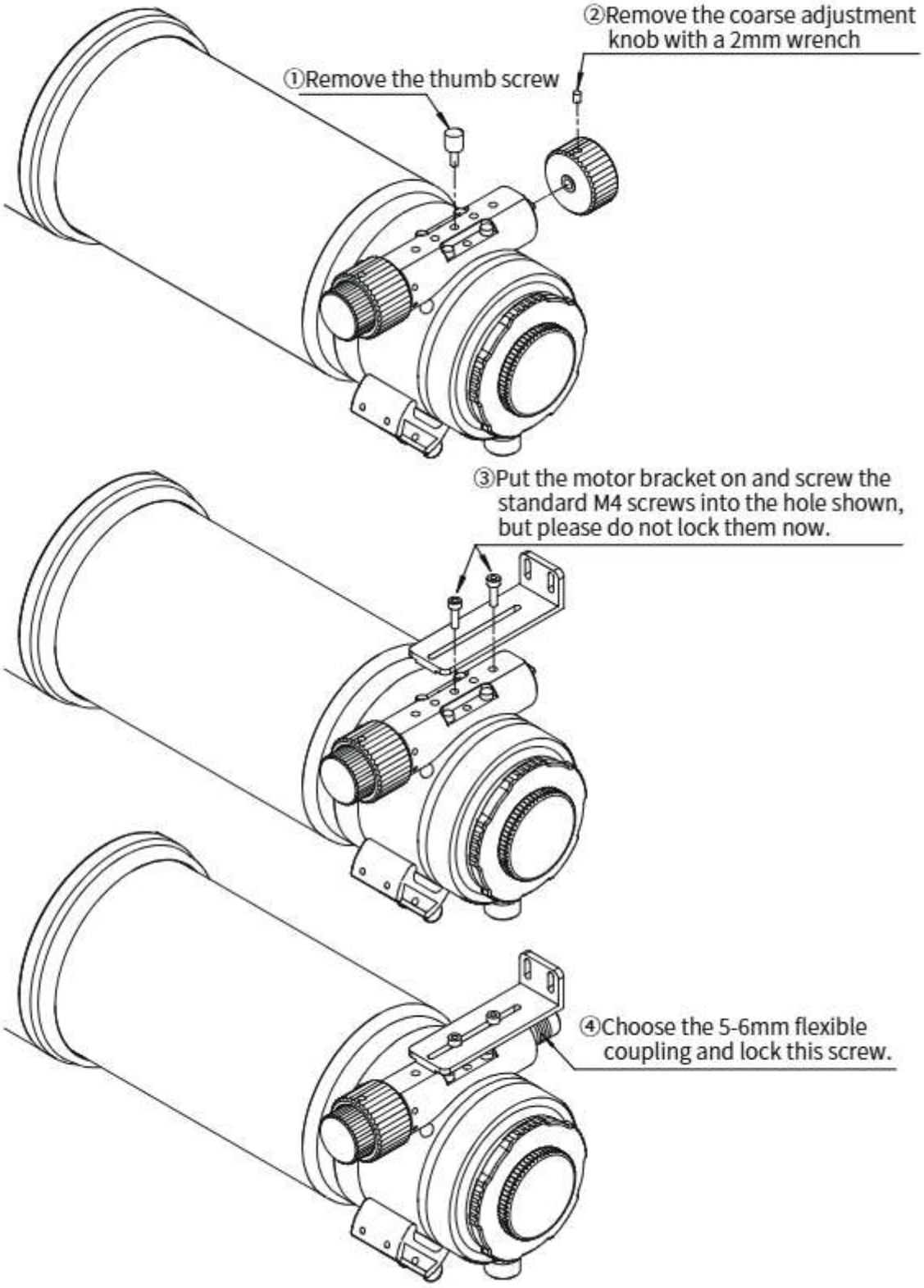

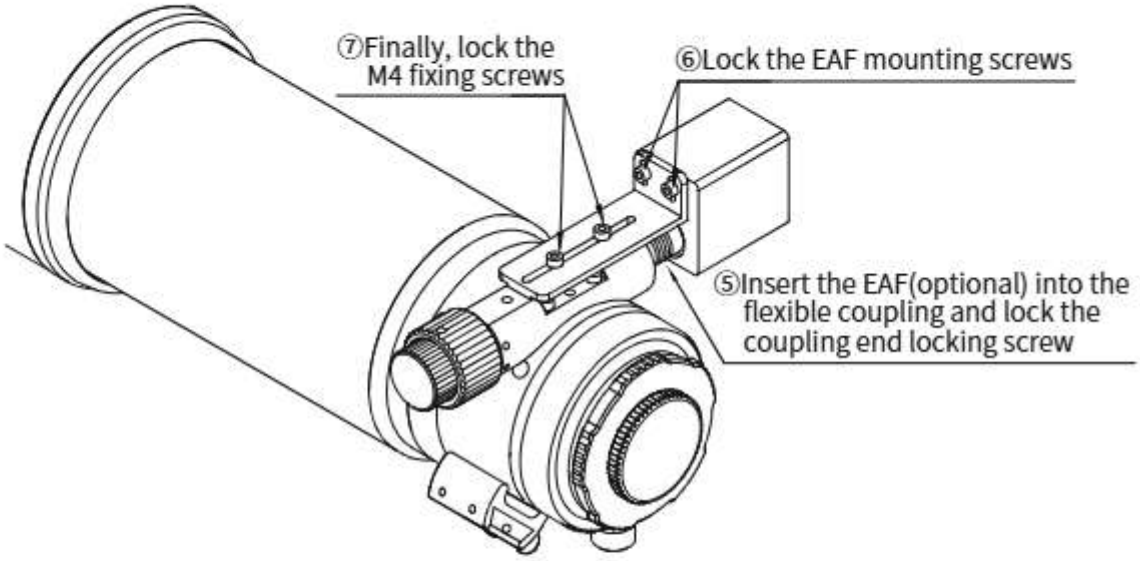

Items in SQA106 Packaging

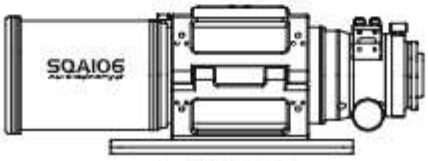

SQA106 OTA

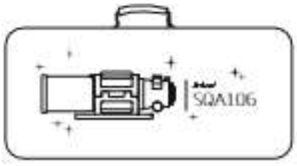

An Oxford cloth bag



An M54 adapter



An M68 adapter



Instruction manual



Warranty card



Check list



Qualified certificate



Official site Facebook YouTube



Ins Twitter