Askar

65PHQ

User's Manual

WARNING!

DO NOT LOOK AT SUN THROUGH TELESCOPE.
IT WILL CAUSE IRREVERSIBLE DAMAGE TO YOUR EYE.

www.askarlens.com

English

Instructions for use

65PHQ is a flatfield astrograph newly launched after 80PHQ, 107PHQ, and 130PHQ. Instead of buying extra flatteners, calculating the back focus of the flattener, or making a tedious connection to match the correct distance, astrophotographers can simply equip it with any possible imaging accessories, make the target stays at the focus, and then the whole optical system is perfect for imaging.

65PHQ has a smaller size than other PHQ astrographs. 65PHQ has a focal ratio of f/6.4 and a focal length of 416mm. Instead of the quadruplet structure of other PHQs, the 65PHQ is a quintuplet with two ED glasses which offers excellent control of chromatic and other aberrations. With its self-flattening design, 65PHQ offers strong advantages in astronomical shooting. It supports the full-frame image circle and has a fine spot diagram with tiny distortions of the peripheral stars.

65PHQ comes with a telescopic lens hood, a high-quality CNC machined,painted tube, and attractive decorative parts. The OTA weighs 2kg, and the full package with tube rings, etc. weighs 2.8kg. The 2.5" rigid focuser comes with a new-type 360° rotator with scales and a finder base. M68, M54, and M48 camera adapters are also attached, and the M48 adapter has a 2" female thread for installing filters.

It is also a nice choice for your visual observation. With different diagonals and various eyepieces and it can also achieve a perfect focus.It can even be used to observe planets with a super-high magnification eyepiece. The 65PHQ contains a multifunctional handle, a 300mm Vixen dovetail plate, and sturdy double tube rings. It is small in size and light in weight, which perfectly caters to your need for viewing and shooting.

Aperture size: 65mm
Focal length: 416mm
Focal ratio: f/6.4
Objective lens: Quintuplet air-spaced APO (including two ED glasses)
Image circle: 44mm
Maximum accessory connection (with the focuser fully retreated):
1. Imaging mode:
76mm (from the base of M48×0.75 male thread)
105mm (from the base of M54×0.75 male thread)
130mm (from the base of M68×1 male thread)
2. Observing mode:
121mm (from the end of 2" eyepiece holder)
Total length:
328mm (including 1.25" eyepiece holder as dew shield contracted)
388mm (including 1.25" eyepiece holder as dew shield fully stretched)
360mm (including the 3-piece adapter as dew shield contracted)
420mm (including the 3-piece adapter as dew shield fully stretched)

Net weight: 2kg
Gross weight: 2.8kg
Rear-end thread type:
M68×1-M54×0.75
M54×0.75-M54×0.75
M54×0.75-M48×0.75 (built-in 2" filter thread)
Rear end of the 3-piece photographic adapters: M48×0.75
Standard package items: a 65PHQ OTA, a pair of tube rings, a handle, Askar 300mm Vixen-style dovetail plate, a set of 3-piece photographic adapters, a manual

Product Parts Diagram

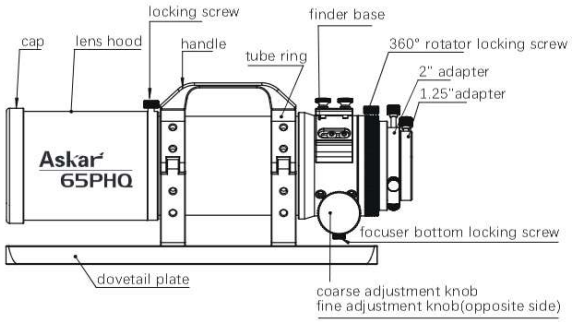

Product Size Diagram

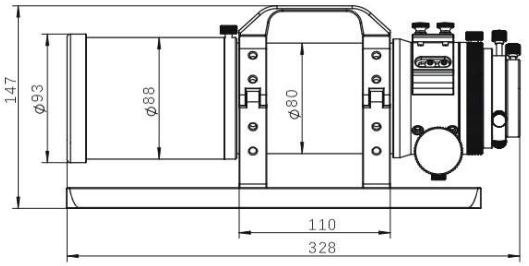

Three-piece Adapters Diagram

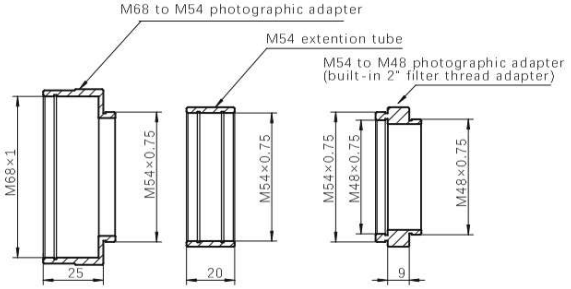

Connection Diagram of Camera

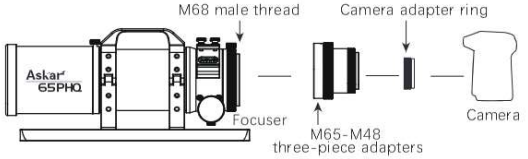

The Locking Screw Position Diagram

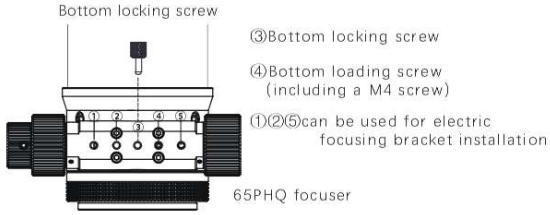

Items in 65PHQ Packaging

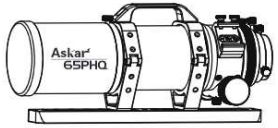

a 65PHQ OTA, a pair of tube rings, a handle, Askar 300mm Vixen-style dovetail plate, a set of 3-piece photographic adapters, a manual



Instruction manual