Askar

SQA70

User's Manual

WARNING

DO NOT LOOK AT SUN THROUGH TELESCOPE.
IT WILL CAUSE IRREVERSIBLE DAMAGE TO YOUR EYES.

www.sharpstar-optics.com

English

Instructions for use

The SQA70 is an OTA with an aperture of 70mm, a focal length of 336mm, and a native focal ratio of 4.8. The SQA70 has great star performance, with excellent full-field illumination and MTF data.

The SQA70 lens has a quintuplet air-spaced design that includes 2 pieces of ED glass and supports full-frame imaging. The SQA70 has a Petzval self-flattened structure, eliminating the need for additional calculation of the back focus. Between 37mm and 68mm connection distance, users can directly use it for shooting after the OTA is in focus.

The SQA70 designs a retractable dew shield, that can be pulled out or pulled in according to the actual use needs.

The SQA70's tube ring is an integrated pair of tube ring sets, with a hollow design in the middle to reduce overall weight. There are 4 M4 and M6 threaded holes on both sides of the tube ring, which are convenient for installing the base or dove-tail plate and connecting different accessories. The handle on the top of the tube ring is slotted with a multifunctional finder base, which can be used to install astronomical accessories. The dovetail plate on the bottom of the tube ring is a standard Vixen-style 290mm dovetail plate.

The SQA70 focuser is a dual-speed rack-and-pinion 2.5-inch focuser that can be compatible with most motorized focusers on the market. The focusing travel is 32 mm, and the focuser tube is engraved with high-precision scales. On both sides of the focuser, there are two finder bases.

The rear of the focuser is equipped with a 360° high-precision rotator with a precision scale to allow the user to adjust and

save the rotation angle. It is also equipped with an edge-shaped locking screw for easy locking.

The end of the SQA70 is equipped with a variety of adapters, all of which are toothed and ribbed, making it easy to rotate manually without slipping. The adapters are available in sizes M42, M48, and M54 and can be used to mount various accessories.

SQA70 Specifications

Aperture: 70mm

Focal length: 336mm

Focal ratio: F4.8

Objective lens: Quintuplet petzval APO
(including two pieces of ED glass)

Total length: 332mm(when the dew shield is contracted);
372mm(when the dew shield is stretched)

OTA weight: 2.68kg

Total weight: 3.5kg

Rear-end thread type: M48 adapters

Accessories: a SQA70 OTA(Includes an M48 adapter), an M42 adapter, an M54 adapter, an Oxford cloth bag, an inspection list, a manual

Product Size Diagram

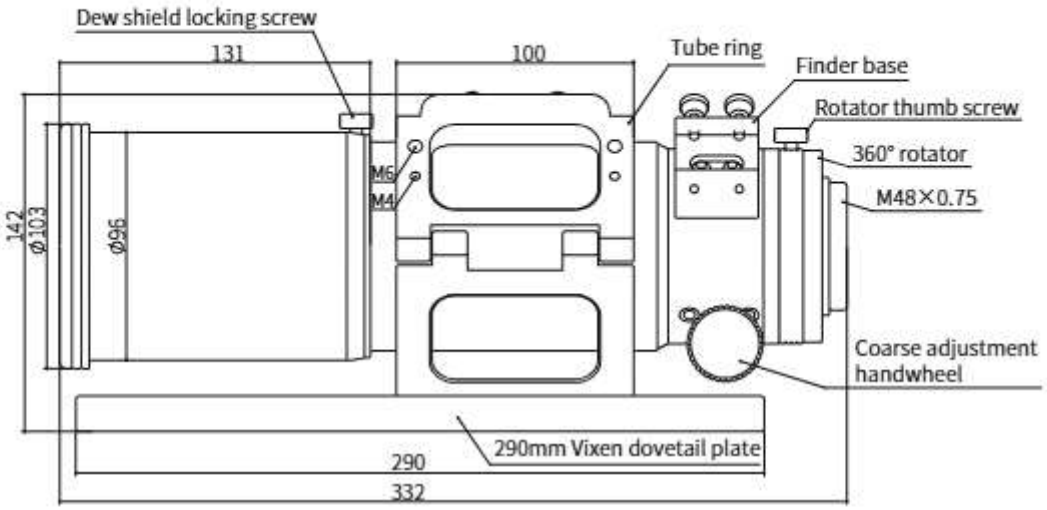

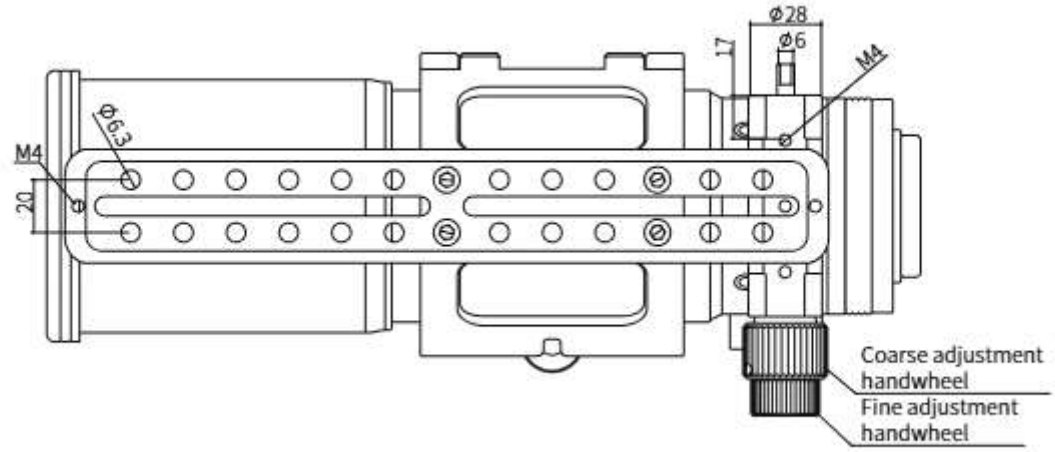

The Locking Screw Position Diagram

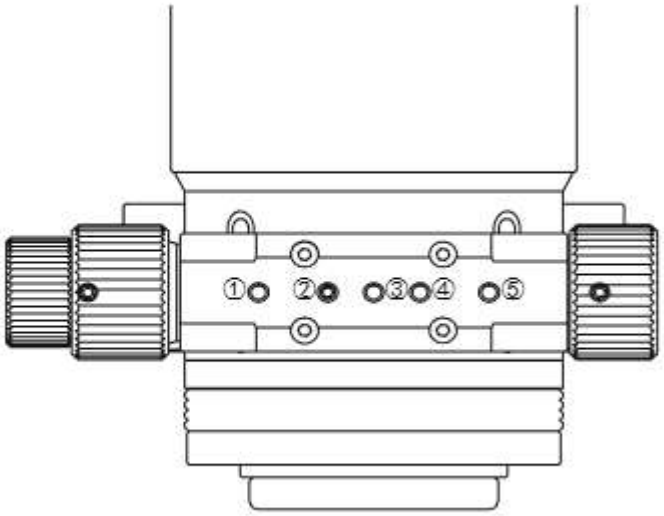

②Bottom Load Adjustment Screw

③Bottom Locking Screw

①③④⑤can be used for electric focusing bracket installation

Steps of Installing EAF

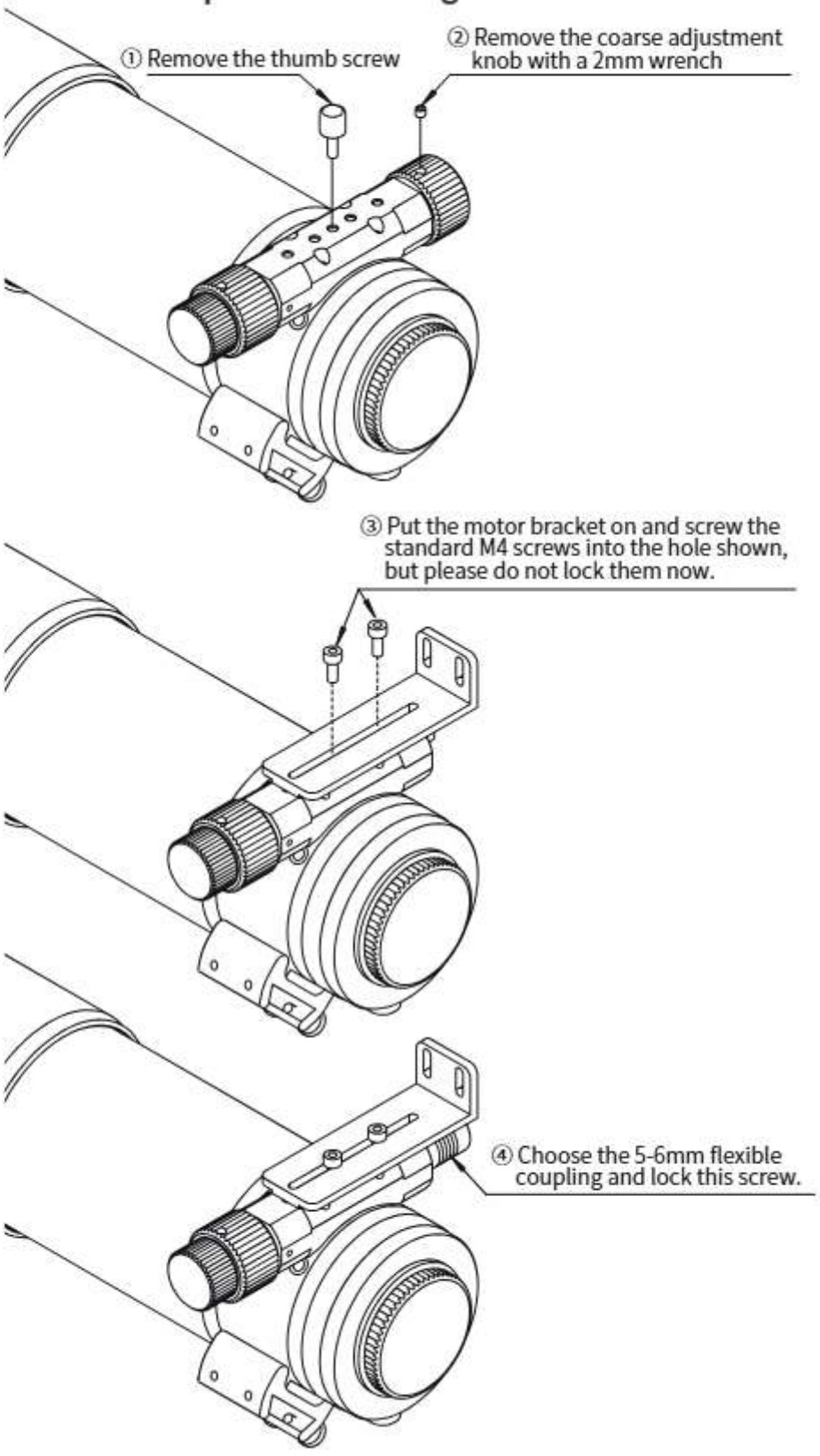

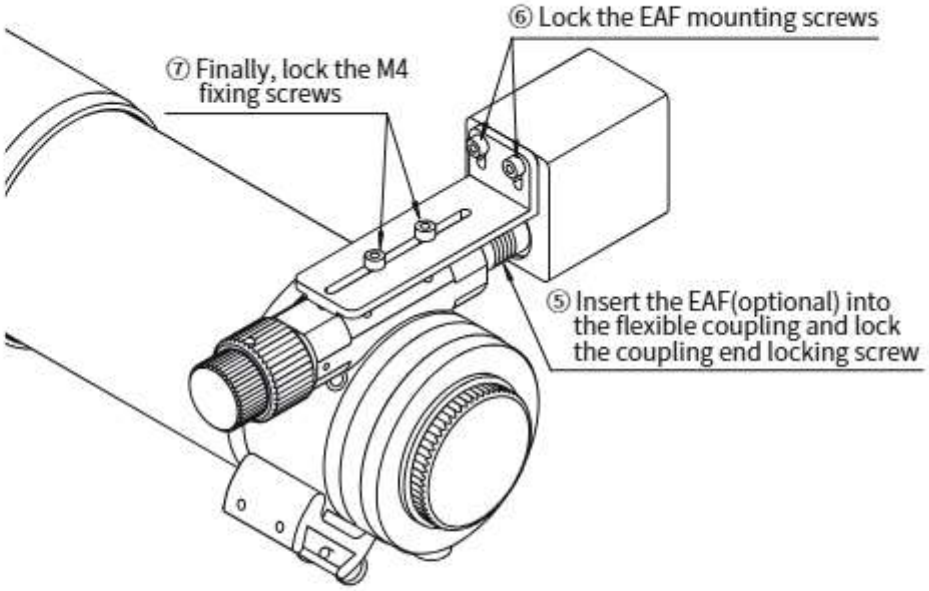

Items in SQA70 Packaging

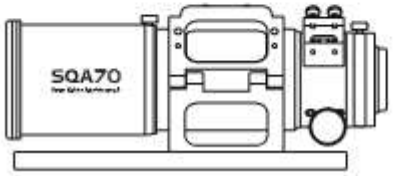

SQA70 OTA

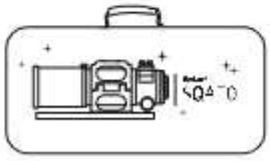

An Oxford cloth bag



An M42 adapter



An M54 adapter



Instruction manual



Warranty card



Check list



Qualified certificate



Official site



Facebook



YouTube



Ins



Twitter