LanParte

USER MANUAL

Contact us for further questions!

www.lanparte.com

LA3D-2 manual

HONGKONG LANPARTE TECHNOLOGY LIMITED

Email:info@lanparte.com

Tel:+86-0769-81889368

Fax:+86-0769-85841828

ADD:NO.39, 2nd Xin'an road

Changan Town, Dongguan, Guangdong, China

LanParte

DETACHABLE WIRED CONTROL GIMBAL

3-Axis Handheld Gimbal for Sports Cameras

LA3D-2

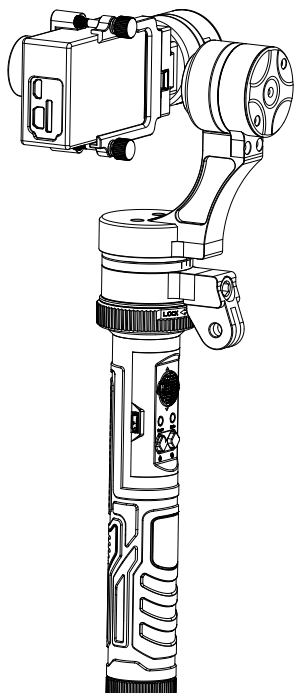

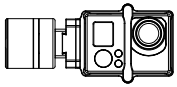

Attention !

Make sure to install the camera before turning on the power

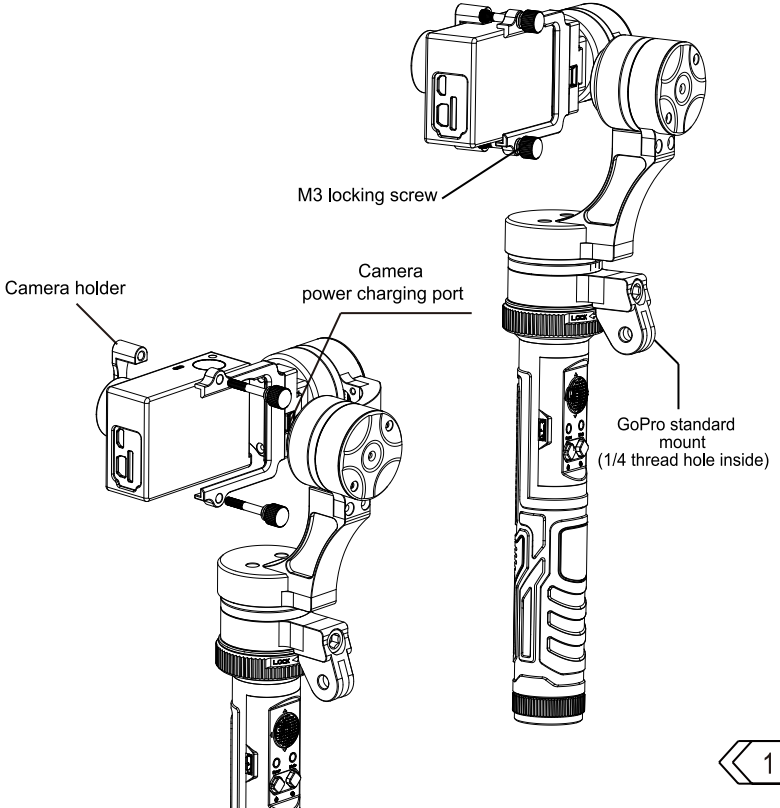

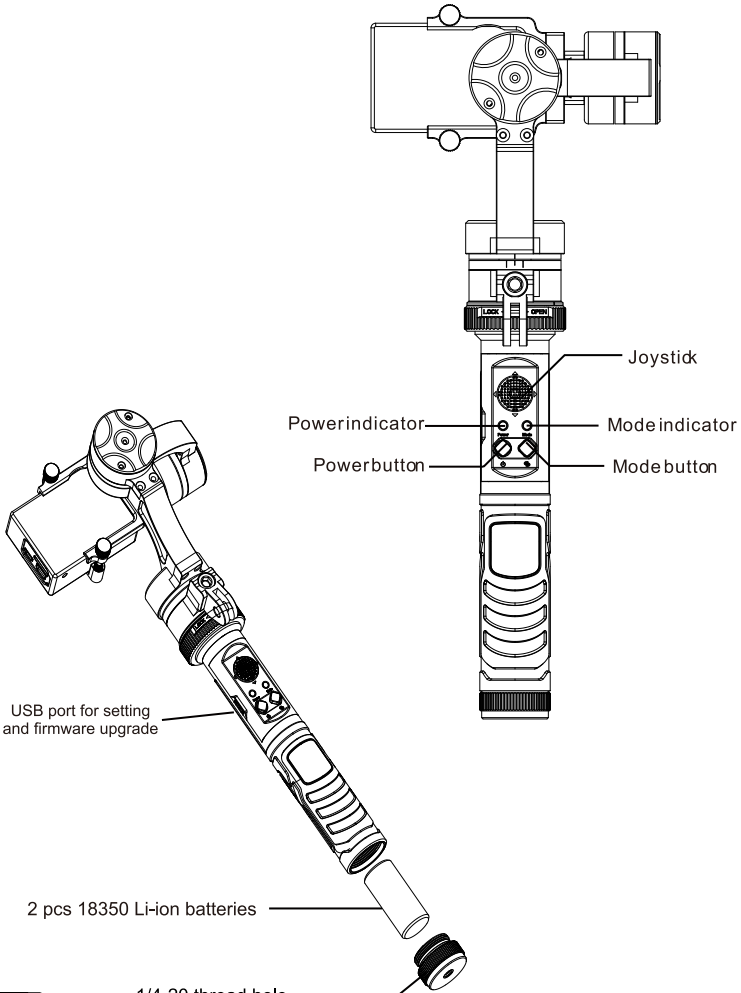

2 Item list

Serial No.	Item Name	QTY
①	3-Axis handheld gimbal head	1
②	Gimbal handle	1
③	18350 Li-ion battery	2
④	Handle extender	1
⑤	Wired control cable(1.5m)	1
⑥	Micro USB cable (For camera powering)	1
⑦	Micro USB cable (For battery charger)	1
⑧	Battery charger	1

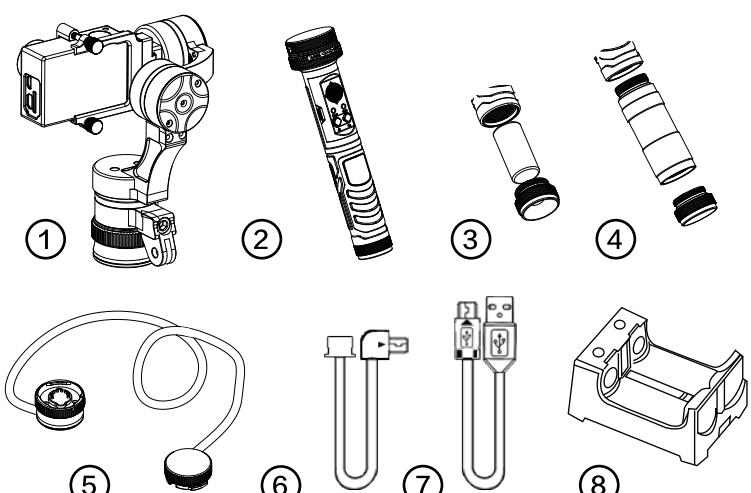

3 Gimbal Installation

3.1 Gimbal Installation

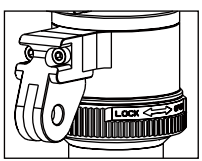

Turn counter clockwise to open

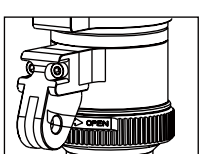

Turn clockwise to lock

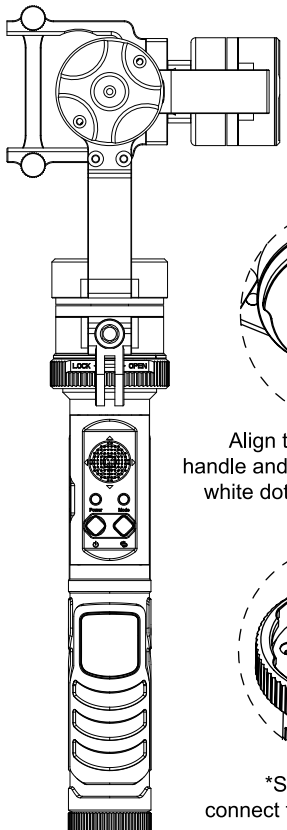

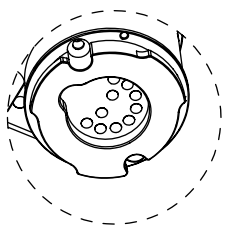

Align the contacts on the handle and gimbal head and align white dots and turn clockwise.

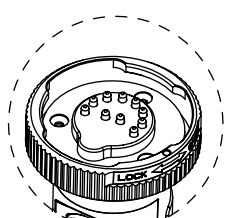

*Same process to connect the wired control cable

*Ensure that the pins are in contact with each other before tightening the locking knob.

3.2 Battery Instructions

Battery installation:
Unscrew the battery compartment cap and install two 18350 batteries; or add the handle extender and install two 18650 batteries (install the positive end first)

*Please note that the nominal voltage of the gimbal is 7.4V

- Each 18350 & 18650 battery is 3.7V. Therefore, the gimbal MUST operate on a maximum of TWO batteries.
- Batteries must be combined as per below scenarios:

Scenario 1



3.7V + 3.7V = 7.4V **OK**

Scenario 2

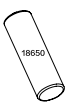

3.7V = 3.7V **NOT OK**

Scenario 3
(with extender tube)

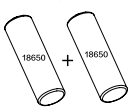

3.7V + 3.7V = 7.4V **OK**

Scenario 4
(with extender tube)

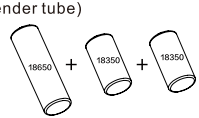

3.7V + 3.7V +3.7V= 11.1V **NOT OK**

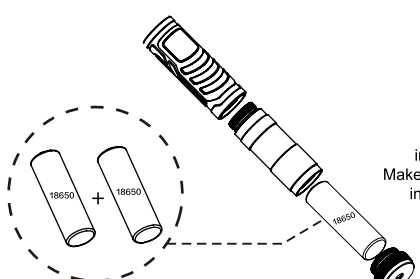

Handle extender

Extending the tube to install 2pcs 18650 batteries.
Make sure to attach extender before installing the 18650 batteries.

4 Operation

4.1 Powering on/mode switch

A. Before turning on the power, make sure the white line aligns with the middle line.

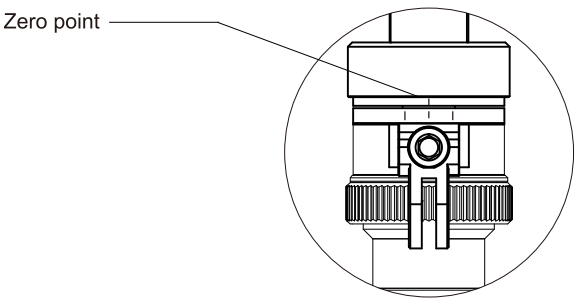

B. To power on the gimbal, hold the power button for 2 seconds until the power indicator turns on. The gimbal is now in STANDBY mode.
Operation modes- Hold the MODE button for 4 seconds. The gimbal will stabilize the sports camera and enter Mode 1, Follow Mode. Quickly double-tap the mode button to enter Mode 2.Quickly triple-tap to enter Mode 3.Single-tap to return to Mode 1.

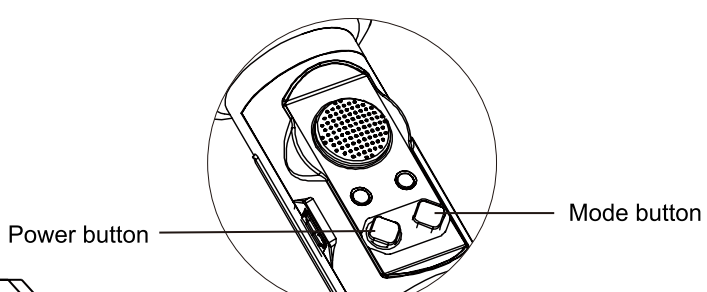

4.2 Portrait vertical mode:

Double-tap the POWER button to enter portrait mode. Repeat the double-tap to switch back to landscape mode.

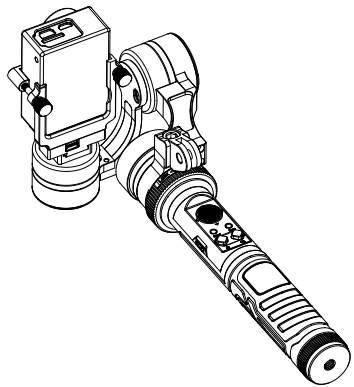

4.3 Gimbal head turns in 180°

Turn on the gimbal and enter Mode 1. Tap the power button once and the gimbal head will rotate 180°.

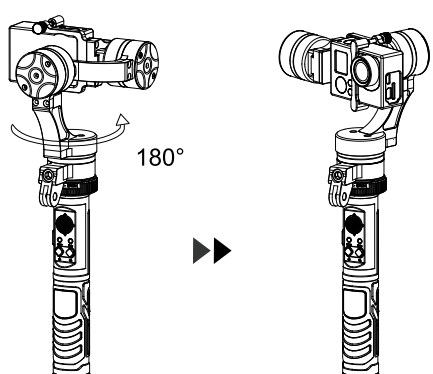

5 Mode Switching

Modes	Control Button	How to activate (in Operation mode)	Mode Indicator	Direction Control
Mode1	Mode button	Single-tap	Green	Push the joystick left and right to adjust the Roll.
Mode2	Mode button	Double-tap	Red	Push the joystick left and right to adjust the Roll; up and down to adjust the Pitch (Tilt).
Mode3	Mode button	Triple-tap	Blue	Push the joystick left and right to adjust the Yaw (Pan); up and down to adjust the Pitch (Tilt).

6 Function/Mode switching

Function	Control Button	Activating By	Remarks
Power on	Power button	Press Power button for 2 seconds.	The power indicator will blink.
Standby/ Operation mode switching	Mode button	In standby mode, press the Mode button for 4 seconds; Press the Mode button for 4 seconds to revert back to standby mode	
180° rotation function	Power button	While the gimbal is stabilized, tap the Power button once. Tap the Power button to rotate back to the original position.	The gimbal must be horizontally even (Yaw) before 180° rotation; the portrait mode and 360° panorama function are not available when rotated 180°.
Portrait mode	Power button	Double-tap Power button while in Operation mode; Repeat to return to landscape mode.	
360° panorama	Power button	Triple-tap the Power button while in Operation mode	The gimbal must be horizontally even (Yaw) before 180° rotation; this function will only work when holding the gimbal upright.
Power off	Power button	Press the Power button for 2 seconds	

Operating mode and Axis status

Mode \ Axis	Pitch(Tilt)	Roll	Yaw(Pan)
Mode1	Following	Locked	Following
Mode2	Locked	Locked	Following
Mode2	Locked	Locked	Locked

7 Power Display

Power Indicator Status	Indicator Status
75%-100%	Light blinks 4 times, 1 sec/time, repeat after 5 sec
50%-75%	Light blinks 3 times, 1 sec/time, repeat after 5 sec
25%-50%	Light blinks twice,1 sec/time, repeat after 5 sec
Below 25%	Light blinks continuously.

*Note: For better performance, change the battery when the power is below 25%. Otherwise low battery will begin to affect the stability of the gimbal.

8 Charger

Rechargeable battery

Model: 18350/18650 Li-ion battery
Capacity: 900mAh/2600mAh
Charging time: 3h/8h

Li-ion battery charger

Input: DC 5V/80mAh
Output: DC 4.2V/400mAh x 2

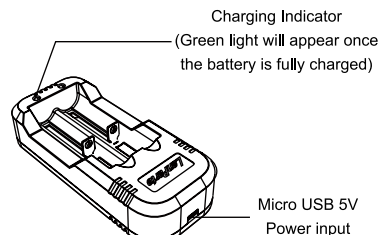

*Note: 18350 battery charger can be charged by using smartphone charger, power bank or any PC with a USB port.

9 Standby Mode

To enter Standby mode while the gimbal is off, press the Power button for 4 seconds. The mode indicator light will turn on and a blue light will flash every few seconds. To enter Standby mode while the gimbal is on and stabilized, press the Mode button for 4 seconds.

Factory reset: While in standby mode, press and hold the DOWN direction on the joystick for 5 seconds. The mode indicator light will turn red and start to blink. Wait for several seconds and all the settings will restore to factory default.

Sensor calibration: While in standby mode, press and hold the LEFT direction on the joystick for 5 seconds. The mode indicator light will turn green and start to blink. The light will then turn red upon completion.

*Note: Balance the platform before doing a sensor calibration.

10 Gimbal Basic Parameters

Rotation Angles

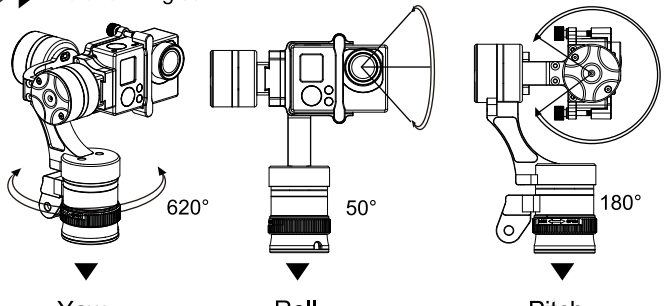

Size of Gimbal

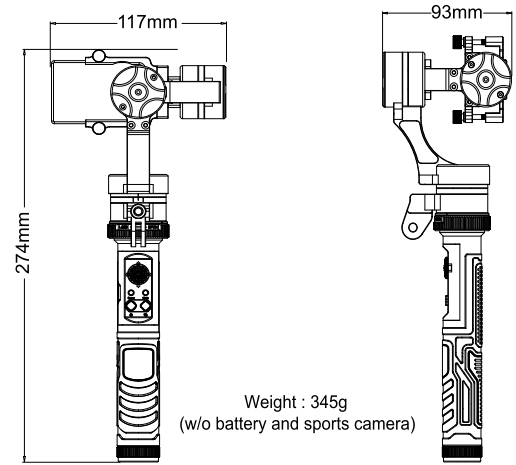

11 Parameter

Item	Parameter
Operating voltage	6.5V - 12.6V
Operating current	Standard 120mA
Pitch angle	± 90
Roll angle	± 25
Yaw angle	± 310
Battery operating time	Standard 2h
Operating Temperature	- 10 ~ 40
Net weight	345g(w/o battery and sports camera)
Product Dimension	300.4 * 205.4 * 92.4(mm)
Package Dimension	21 * 17 * 18(cm)

12 Wired control cable

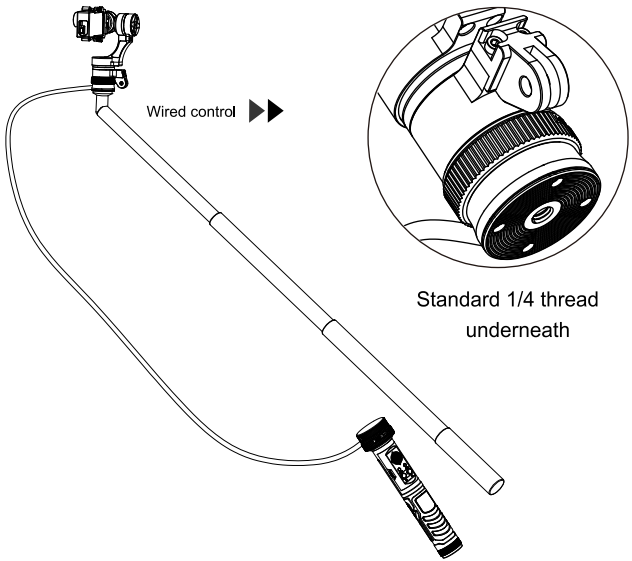

Standard 1/4 thread underneath

*1/4 thread hole on the bottom for use with common accessories.

13 Wireless control kit (optional accessories)

