Unpacking

Thank you for buying the MSI® **X299 SLI PLUS** motherboard. Check to make sure your motherboard box contains the following items. If something is missing, contact your dealer as soon as possible.

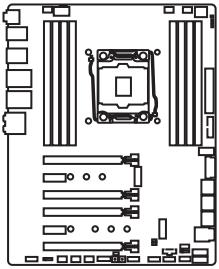

Motherboard

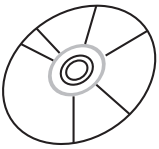

Drivers & Utilities Disc

Motherboard User Guide

I/O Shield

SLI Bridge Connector

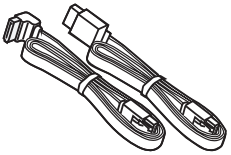

SATA Cable x2

Safety Information

• The components included in this package are prone to damage from electrostatic discharge (ESD). Please adhere to the following instructions to ensure successful computer assembly.

• Ensure that all components are securely connected. Loose connections may cause the computer to not recognize a component or fail to start.

• Hold the motherboard by the edges to avoid touching sensitive components.

• It is recommended to wear an electrostatic discharge (ESD) wrist strap when handling the motherboard to prevent electrostatic damage. If an ESD wrist strap is not available, discharge yourself of static electricity by touching another metal object before handling the motherboard.

• Store the motherboard in an electrostatic shielding container or on an anti-static pad whenever the motherboard is not installed.

• Before turning on the computer, ensure that there are no loose screws or metal components on the motherboard or anywhere within the computer case.

• Do not boot the computer before installation is completed. This could cause permanent damage to the components as well as injury to the user.

• If you need help during any installation step, please consult a certified computer technician.

• Always turn off the power supply and unplug the power cord from the power outlet before installing or removing any computer component.

• Keep this user guide for future reference.

• Keep this motherboard away from humidity.

• Make sure that your electrical outlet provides the same voltage as is indicated on the PSU, before connecting the PSU to the electrical outlet.

• Place the power cord such a way that people can not step on it. Do not place anything over the power cord.

• All cautions and warnings on the motherboard should be noted.

• If any of the following situations arises, get the motherboard checked by service personnel:

  ▪ Liquid has penetrated into the computer.

  ▪ The motherboard has been exposed to moisture.

  ▪ The motherboard does not work well or you can not get it work according to user guide.

  ▪ The motherboard has been dropped and damaged.

  ▪ The motherboard has obvious sign of breakage.

• Do not leave this motherboard in an environment above 60°C (140°F), it may damage the motherboard.

Quick Start

Preparing Tools and Components

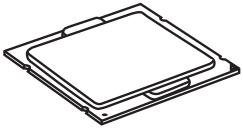

Intel® LGA 2066 CPU

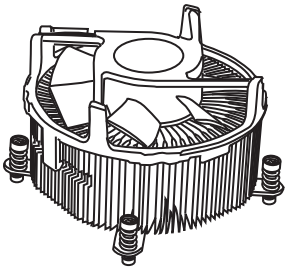

CPU Fan

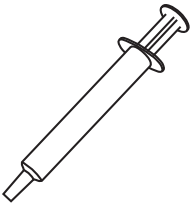

Thermal Paste

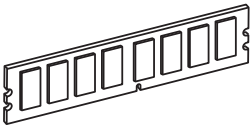

DDR4 Memory

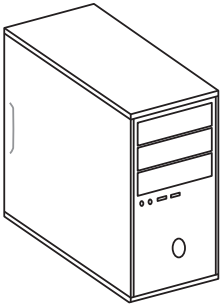

Chassis

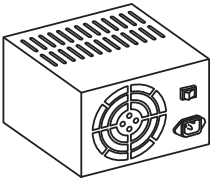

Power Supply Unit

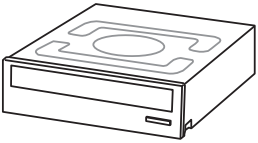

SATA DVD Drive

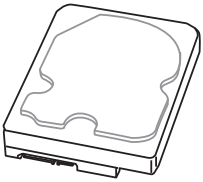

SATA Hard Disk Drive

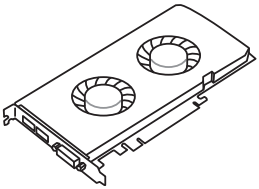

Graphics Card

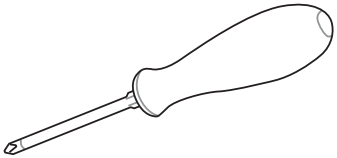

Phillips Screwdriver

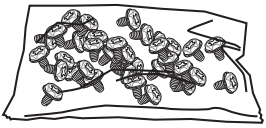

A Package of Screws

Installing a Processor

https://youtu.be/ecdkLMmkya4

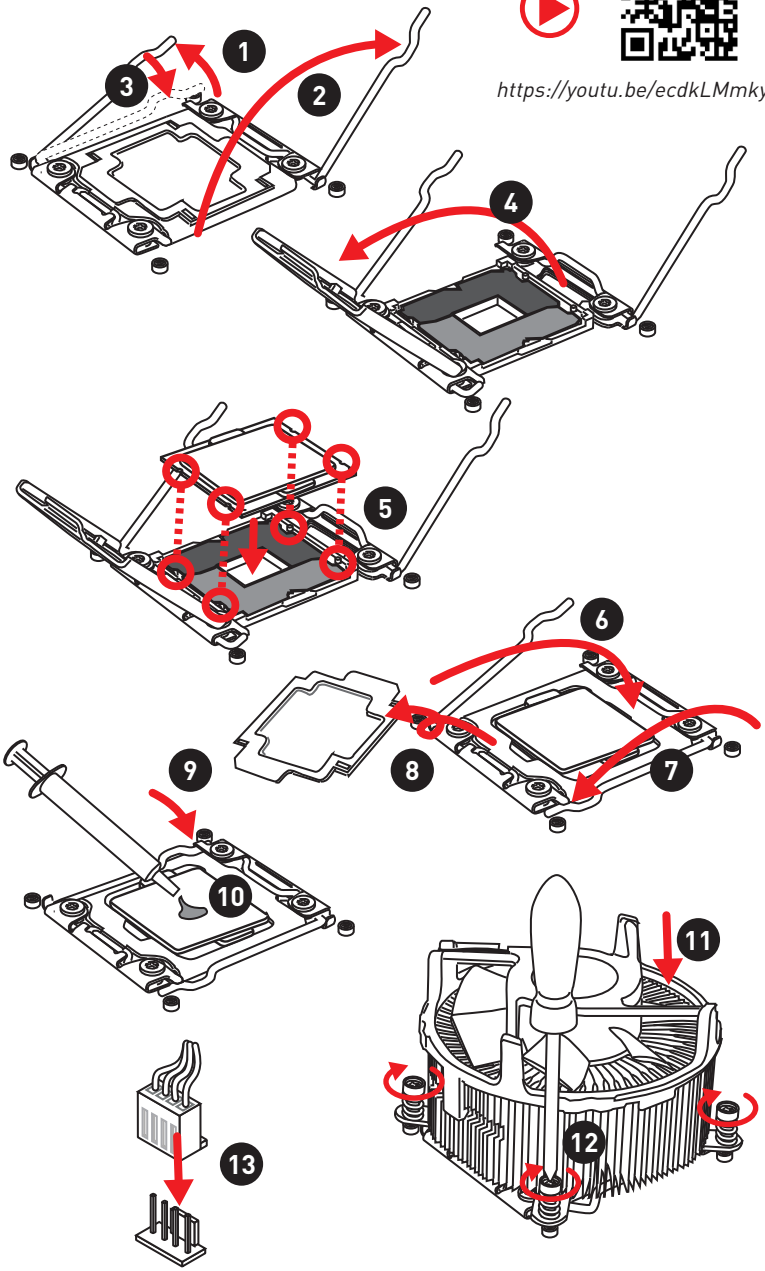

Installing DDR4 memory

http://youtu.be/T03aDrJPyQs

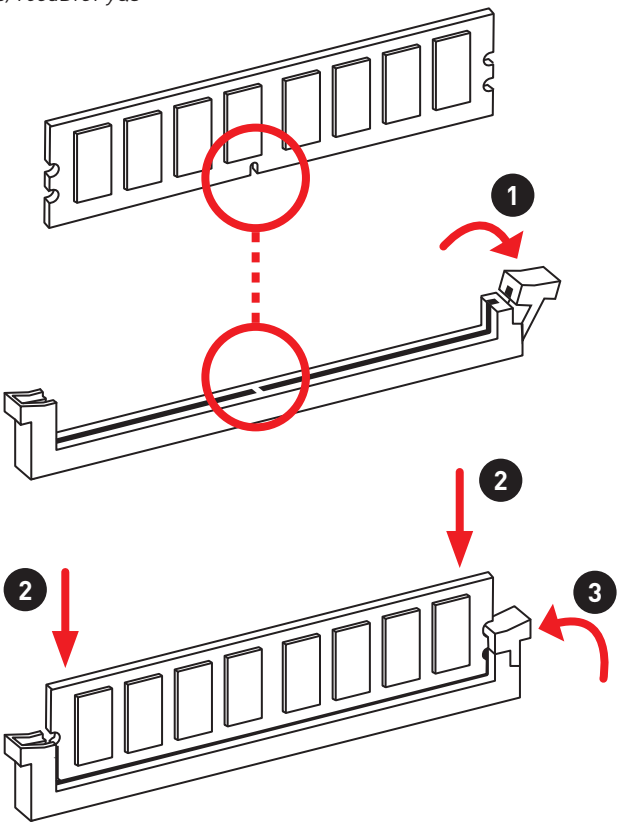

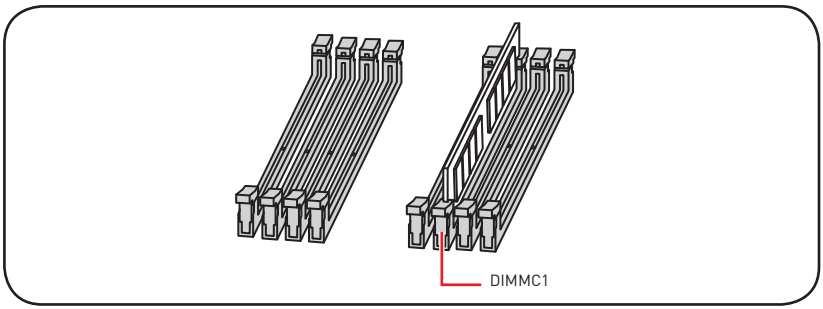

Connecting the Front Panel Header

http://youtu.be/DPELIdVNZUI

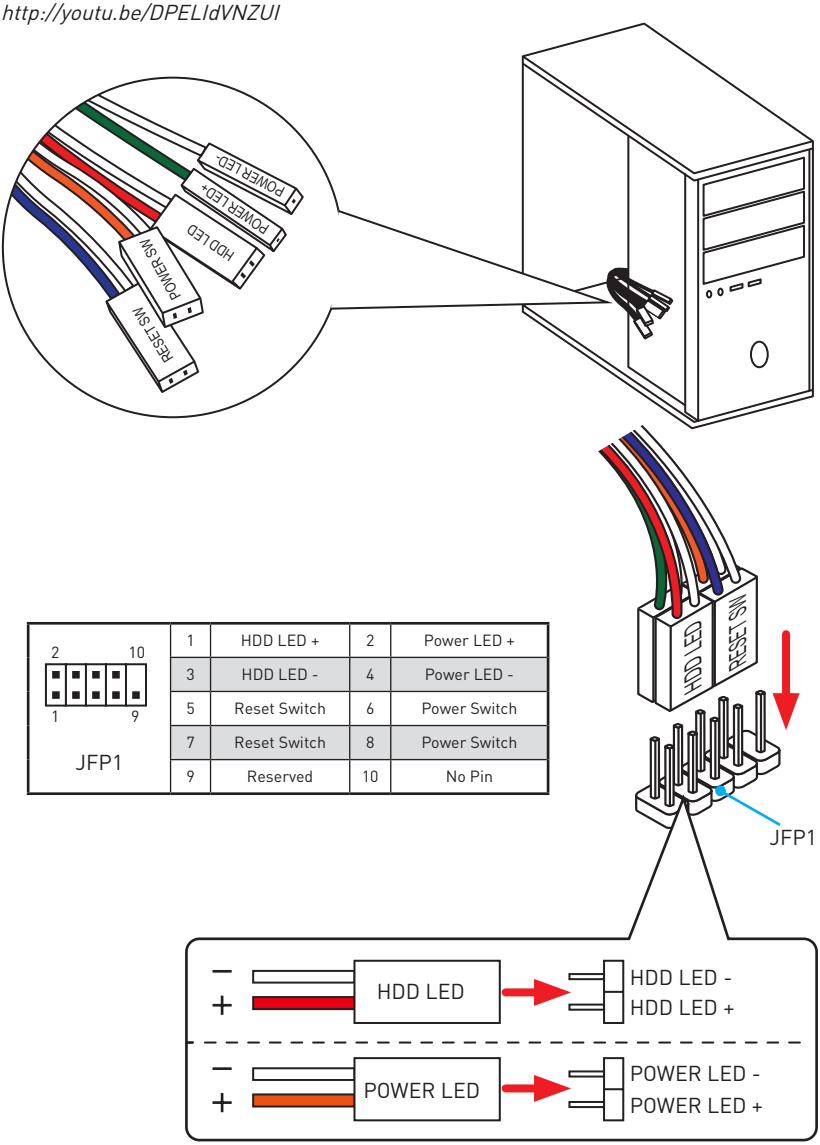

JFP1				
2 10 / 1 9	1	HDD LED +	2	Power LED +
	3	HDD LED -	4	Power LED -
	5	Reset Switch	6	Power Switch
	7	Reset Switch	8	Power Switch
	9	Reserved	10	No Pin

Installing the Motherboard

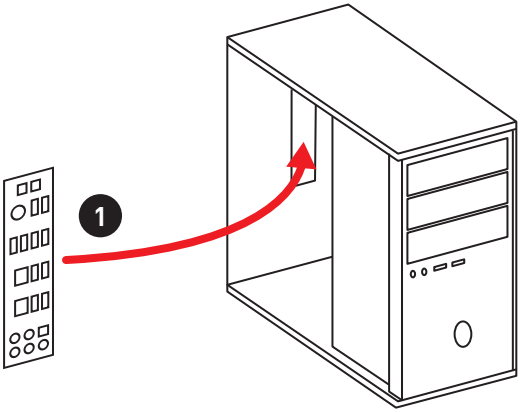

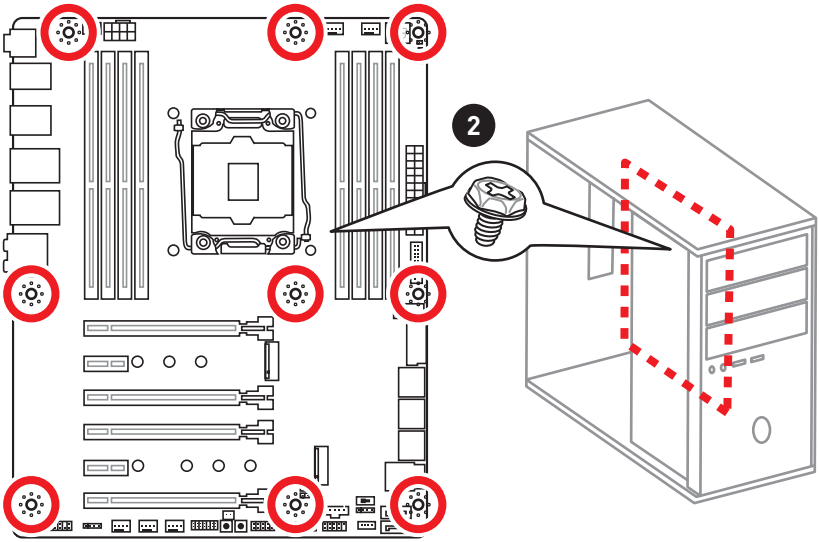

Installing SATA Drives

http://youtu.be/RZsMpqxythc

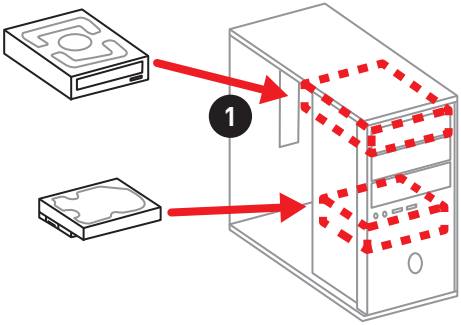

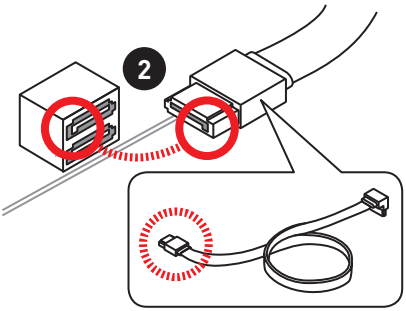

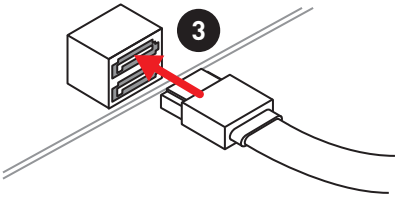

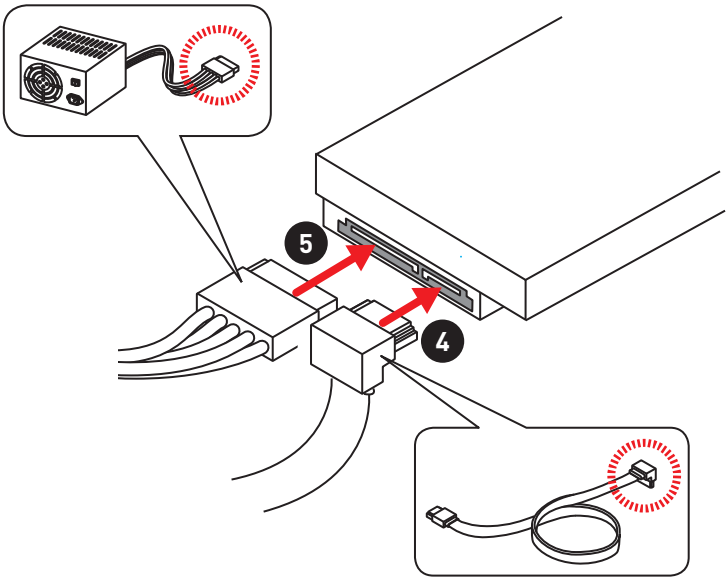

Installing a Graphics Card

http://youtu.be/mG0GZpr9w_A

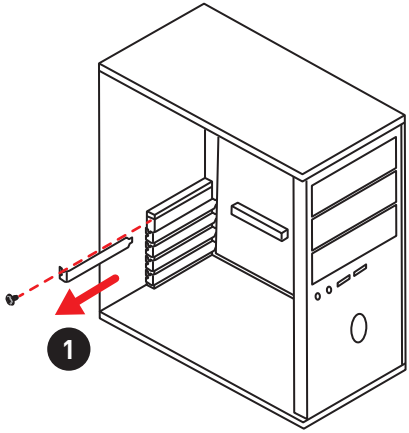

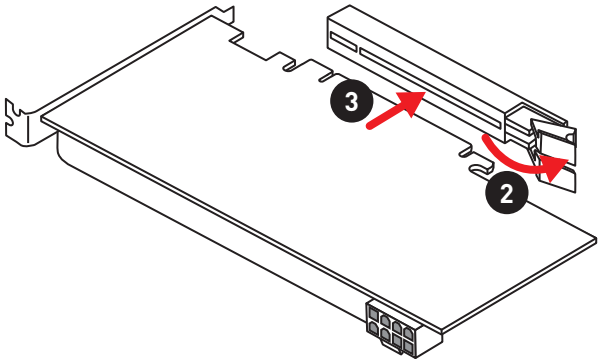

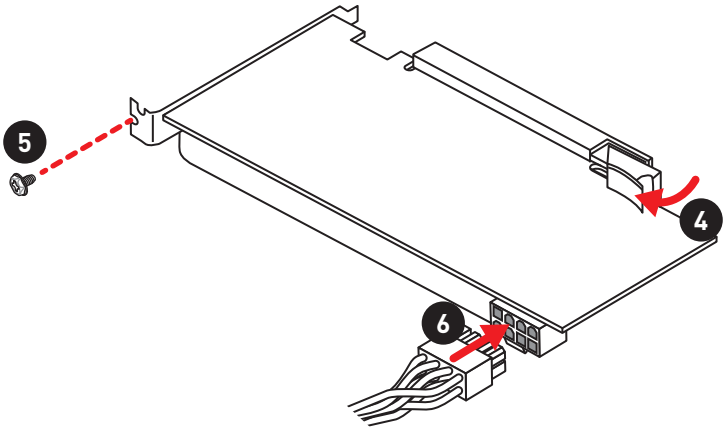

Connecting Peripheral Devices

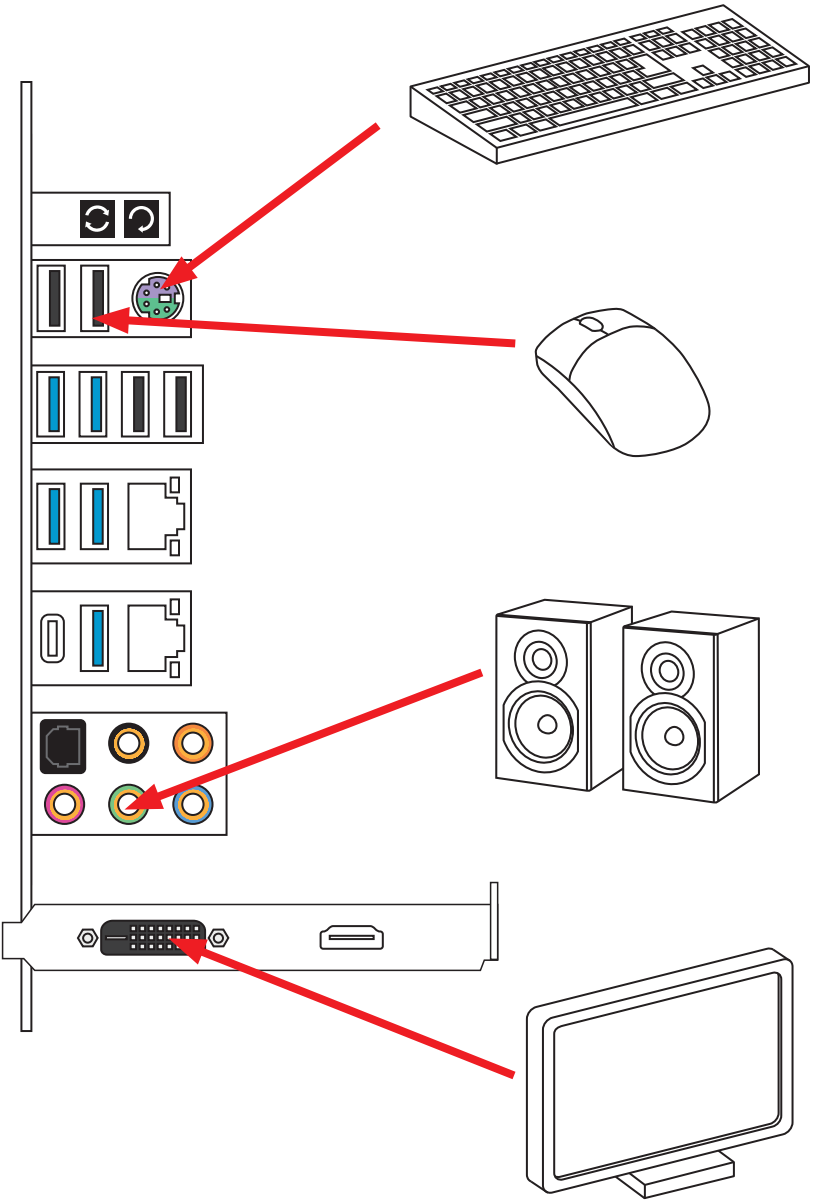

Connecting the Power Connectors

http://youtu.be/gkDYyR_83I4

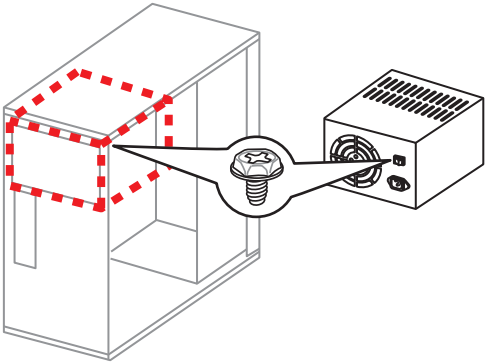

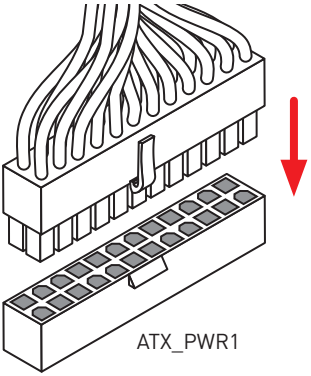

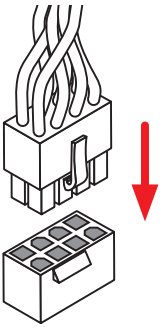

Power On

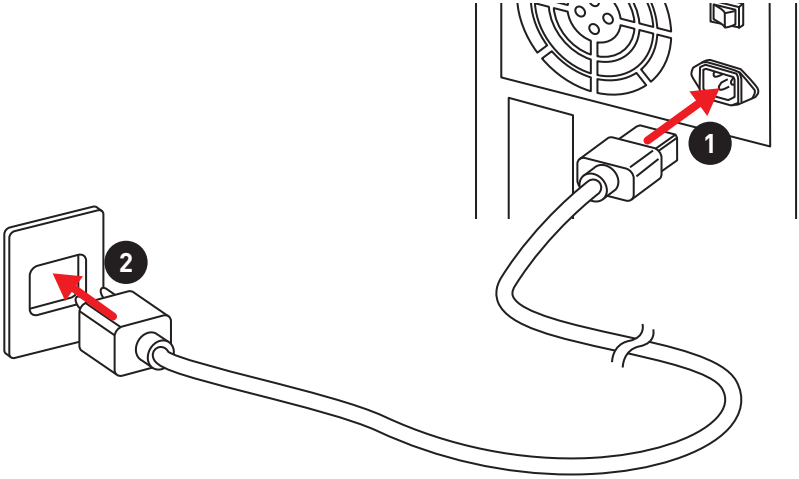

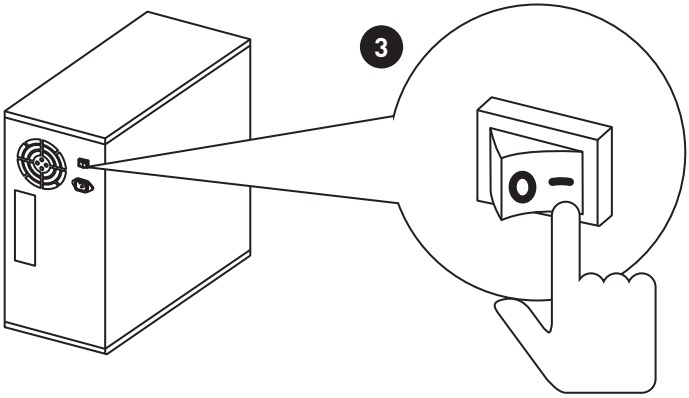

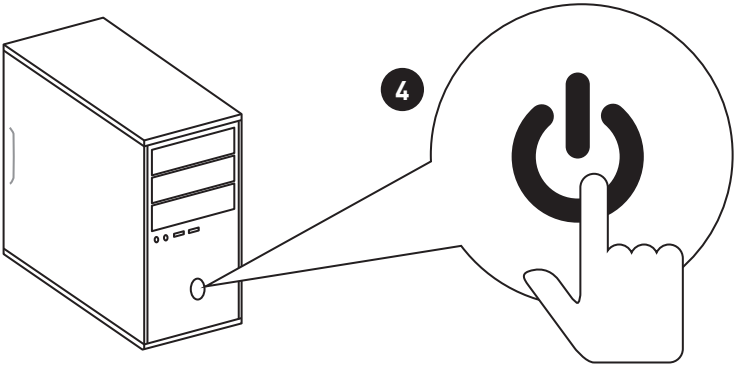

Contents

Unpacking **1**

Safety Information **2**

Quick Start **3**

Preparing Tools and Components 3
Installing a Processor 4
Installing DDR4 memory 5
Connecting the Front Panel Header 6
Installing the Motherboard 7
Installing SATA Drives 8
Installing a Graphics Card 9
Connecting Peripheral Devices 10
Connecting the Power Connectors 11
Power On 12

Specifications **16**

Block Diagram **22**

Rear I/O Panel **23**

LAN Port LED Status Table 23
Audio Ports Configuration 23
Realtek HD Audio Manager 24

Overview of Components **26**

CPU Socket 28
DIMM Slots 29
PCI_E1~6: PCIe Expansion Slots 32
PCIe slots bandwidth table 32
U2_1: U.2 Connector 35
M2_1~2: M.2 Slots (Key M) 36
SATA1~8: SATA 6Gb/s Connectors 37
JFP1, JFP2: Front Panel Connectors 38
CPU_PWR1, ATX_PWR1: Power Connectors 39
VRAID1: Virtual RAID on CPU Connector 39
JUSB1~2: USB 2.0 Connectors 40
JUSB3~4: USB 3.1 Gen1 Connectors 40
JUSB5: USB 3.1 Gen2 Type-C Connector 41
CPU_FAN1, PUMP_FAN1, SYS_FAN1~4: Fan Connectors 42
JTBT1: Thunderbolt Add-on Card Connector 42
JAUD1: Front Audio Connector 43
JCI1: Chassis Intrusion Connector 43

JTPM1: TPM Module Connector 44
JBAT1: Clear CMOS (Reset BIOS) Jumper 44
BIOS_SW1: Multi-BIOS Switch 45
POWER1, RESET1: Power Button, Reset Button 46
JLED1: RGB LED connector 46

Onboard LEDs 47

EZ Debug LED 47
PCIe x16 slot LEDs 47
DIMM LEDs 47
XMP LED 47
Fan LEDs 48
Multi-BIOS LEDs 48
JPWRLED1: LED light demonstration power input connector 48
Debug Code LED 49
Hexadecimal Character Table 49
Boot Phases 49
Debug Code LED Table 49
ACPI States Codes 51
CPU Temperature 51
Updating LED Firmware 52

BIOS Setup 53

Entering BIOS Setup 53
Resetting BIOS 54
Updating BIOS 54
EZ Mode 56
Advanced Mode 58
SETTINGS 59
Advanced 59
Boot 64
Security 65
Save & Exit 66
OC 67
M-FLASH 73
OC PROFILE 74

Software Description 75

Installing Windows® 10 75
Installing Drivers 75
Installing Utilities 75
APP MANAGER 76
LIVE UPDATE 6 77

COMMAND CENTER 79
X-BOOST 83
MYSTICLIGHT 85
MSI SMART TOOL 87
RAMDISK 89
NETWORK MANAGER 90
Intel® Extreme Tuning Utility 92
CPU-Z 93

RAID Configuration 94
Using Intel® Rapid Storage Technology Option ROM 94
Degraded RAID Array 97
M.2 PCIe SSD RAID 99

Intel® Optane™ Memory Configuration 102
System Requirements 102
Installing the Intel® Optane™ memory 102
Removing the Intel® Optane™ memory 104
Troubleshooting 105

Troubleshooting 106

Specifications

CPU	Supports Intel® Core™ X-Series Processor Family for LGA2066 Socket
Chipset	Intel® X299 Chipset
Memory	• 8x DDR4 memory slots, support up to 128GB* • Quad channel memory architecture with the CPU that supports up to 4-channels DDR4** ▪ X-series processor support DDR4 4133(OC)/ 4000(OC)/ 3866(OC)/ 3800(OC)/ 3733(OC)/ 3600(OC)/ 3466(OC)/ 3400(OC)/ 3333(OC)/ 3200(OC)/ 3000(OC)/ 2933(OC)/ 2800(OC)/ 2667/ 2400/ 2133 MHz* • Dual channel memory architecture with the CPU that supports up to 2-channels DDR4** ▪ X-series processor support DDR4 4500(OC)/ 4400(OC)/ 4333(OC)/ 4266(OC)/ 4200(OC)/ 4133(OC)/ 4000(OC)/ 3866(OC)/ 3800(OC)/ 3733(OC)/ 3600(OC)/ 3466(OC)/ 3400(OC)/ 3333(OC)/ 3200(OC)/ 3000(OC)/ 2933(OC)/ 2800(OC)/ 2667/ 2400/ 2133 MHz* • Supports Intel® Extreme Memory Profile (XMP) * For the latest information about memory, please visit http://www.msi.com ** Please refer the DIMM Slots section for more details.
Expansion Slots	• 4x PCIe 3.0 x16 slots ▪ Support x16/x16/x8 mode with the 44-lane CPU.* ▪ Support x16/x8/x4 modes with the 28-lane CPU.* ▪ Support x8/x8/x0, x8/x4/x4 modes with the 16-lane CPU.* • 2x PCIe 3.0 x1 slots * Please refer to page 32 for PCIe 3.0 bandwidth table.
Multi-GPU	• Supports NVIDIA® SLI™ Technology • Supports AMD® CrossFire™ Technology
LAN	1x Intel I219-V Gigabit LAN controller 1x Intel I211 Gigabit LAN controller

Continued on next page

Continued from previous page

Storage	Intel® X299 Chipset • 8x SATA 6Gb/s ports* • 2x M.2 slots (Key M)* ▪ Supports up to PCIe 3.0 x4 and SATA 6Gb/s ▪ M2_1 slot supports 2242/ 2260 /2280 storage devices ▪ M2_2 slot supports 2242/ 2260 /2280/ 22110 storage devices ▪ Intel® Optane™ Memory Ready for all M.2 slots ** • 1x U.2 port *** ▪ Supports PCIe 3.0 x4 NVMe storage • Supports Intel® Smart Response Technology **** * M.2 slots and SATA ports share the same bandwidth. Please refer to page 38 for U.2, M.2 & SATA combination table. ** Please refer to page 101 for Intel® Optane™ Memory Configuration. *** PCI_E3 shares bandwidth with U2_1. If you install a PCI_E3 device, the U2_1 will be disabled. **** The functions will be supported depend on the CPU.
RAID	Intel® X299 Chipset • Supports RAID 0, RAID1, RAID 5 and RAID 10 for SATA storage devices • Supports RAID 0 and RAID1 for M.2 PCIe storage devices* * M.2 PCIe RAID volume can be created with M.2/Optane Genie. Please refer to page 98 for Creating a M.2 PCIe SSD RAID with M.2/Optane Genie.
USB	• ASMedia® ASM3142 Chipset ▪ 3x USB 3.1 Gen2 (SuperSpeed USB 10Gbps) ports (1 Type-A port and 1 Type-C port on the back panel, 1 Type-C port available through the internal USB connector) • ASMedia® ASM1074 Hub ▪ 3x USB 3.1 Gen1 (SuperSpeed USB) ports on the back panel • Intel® X299 Chipset ▪ 5x USB 3.1 Gen1 (SuperSpeed USB) ports (1 Type-A port on the back panel, 4 ports available through the internal USB connectors) ▪ 8x USB 2.0 (High-speed USB) ports (4 Type-A ports on the back panel, 4 ports available through the internal USB connectors)

Continued on next page

Continued from previous page

Back Panel Connectors	• 1x Clear CMOS button • 1x BIOS FLSAHBACK+ button • 1x PS/2 keyboard/ mouse combo port • 4x USB 2.0 Type-A ports ▪ 1x BIOS FLASHBACK+ port • 4x USB 3.1 Gen1 Type-A ports • 2x LAN (RJ45) ports • 1x USB 3.1 Gen2 Type-A port • 1x USB 3.1 Gen2 Type-C port • 5x OFC audio jacks • 1x Optical S/PDIF OUT connector
Internal Connectors	• 1x 24-pin ATX main power connector • 1x 8-pin ATX 12V power connector • 8x SATA 6Gb/s connectors • 2x USB 2.0 connectors (supports additional 4 USB 2.0 ports) • 2x USB 3.1 Gen1 connectors (supports additional 4 USB 3.1 Gen1 ports) • 1x USB 3.1 Gen2 Type-C port • 1x 4-pin CPU fan connector • 1x 4-pin Water Pump connector • 4x 4-pin system fan connectors • 2x Front panel connectors • 1x Front panel audio connector • 1x RGB LED connector • 1x TPM module connector • 1x Virtual RAID on CPU connector • 1x Thunderbolt add-on card connector
Internal Buttons	• 1x Power button • 1x Reset button
Switches	• 1x Multi-BIOS switch
Jumper	• 1x Clear CMOS jumper • 1x Chassis Intrusion connector
Debug LED	• 1x 2-Digit Debug Code LED

Continued on next page

Continued from previous page

Audio	• Realtek® ALC1220 Codec • 7.1-Channel High Definition Audio • Supports S/PDIF output
I/O Controller	NUVOTON NCT6795 Controller Chip
Hardware Monitor	• CPU/System temperature detection • CPU/System fan speed detection • CPU/System fan speed control
Form Factor	• ATX Form Factor • 12 in. x 9.6 in. (30.5 cm x 24.3 cm)
BIOS Features	• 2x 128 Mb flash • UEFI AMI BIOS • ACPI 6.0, PnP 1.0a, SM BIOS 3.0 • Multi-language
Software	• Drivers • APP MANAGER • COMMAND CENTER • LIVE UPDATE 6 • SMART TOOL • X-BOOST • SUPER CHARGER • MYSTIC LIGHT • RAMDISK • NETWORK MANAGER • DPC LATENCY TUNER • FAST BOOST • CPU-Z MSI GAMING • Intel Extreme Tuning Utility • Norton™ Internet Security Solution • Google Chrome™ ,Google Toolbar, Google Drive

Continued on next page

Continued from previous page

Special Features	• Audio ▪ Audio Boost 4 • Network ▪ Intel LAN with Network Manager ▪ Dual LAN • Storage ▪ Turbo U.2 ▪ Twin Turbo M.2 • Fan ▪ Pump Fan ▪ Smart Fan Control • LED ▪ Mystic Light ▪ Mystic Light Extension ▪ Mystic light SYNC ▪ EZ DEBUG LED • Protection ▪ M.2 Shield ▪ PCI-E Steel Armor ▪ U.2 Steel Armor • Performance ▪ Multi GPU – SLI Technology ▪ Multi GPU – CrossFire Technology ▪ DDR4 Boost ▪ OC Engine (Clock gen) ▪ USB with Type A+C ▪ Lightning USB with ASM3142 ▪ Front Lightning USB 3.1 Gen2 Type-C

Continued on next page

Continued from previous page

Special Features	• Stability ▪ Military Class 6 ▪ 7000+ Quality Test • VR ▪ VR Ready • BIOS ▪ Click BIOS 5 ▪ BIOS FLASHBACK+ ▪ Dual BIOS • Certification ▪ Quadro SLI Ready ▪ Quadro Ready

Block Diagram

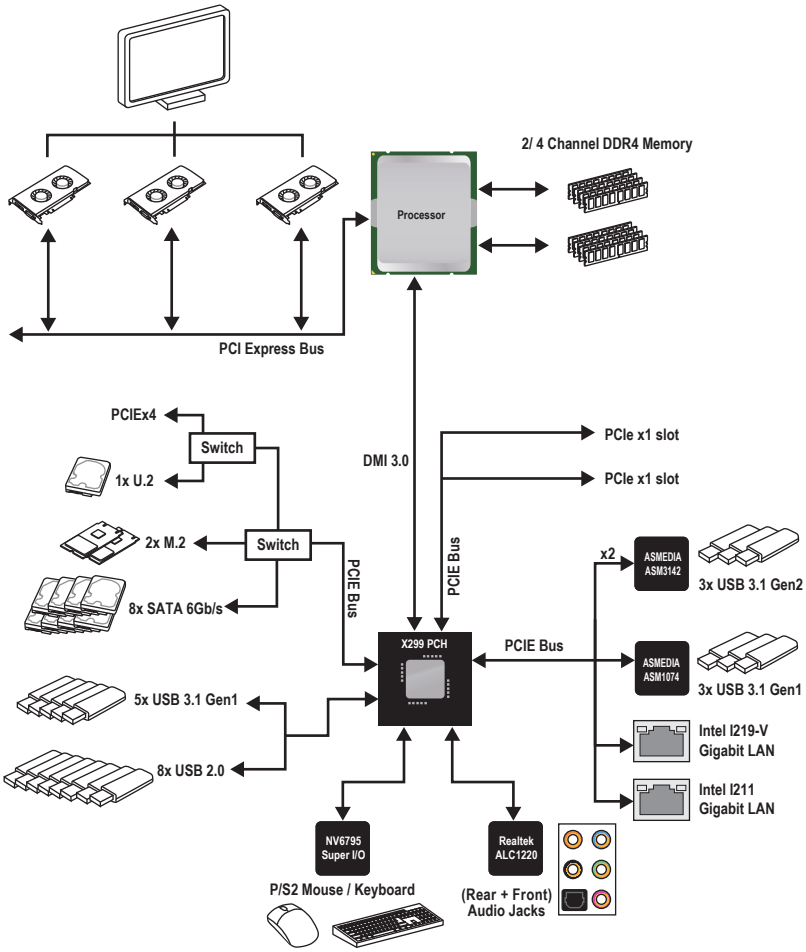

Rear I/O Panel

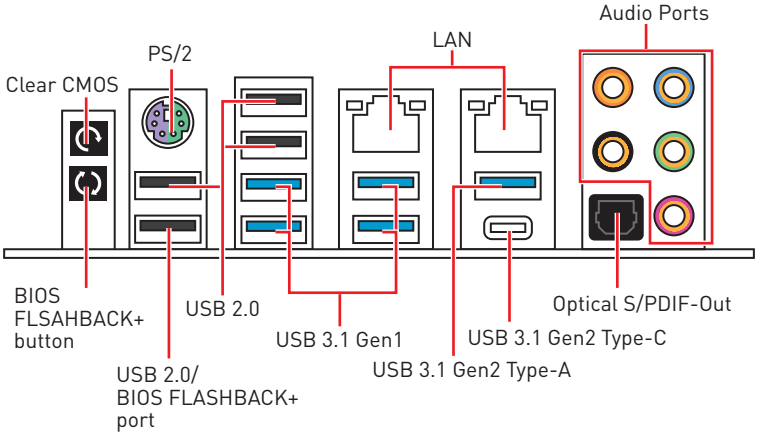

• **Clear CMOS button** - Power off your computer. Press and hold the Clear CMOS button for about 5-10 seconds to reset BIOS to default values.

• **BIOS FLASHBACK+ port/ button** - Please refer to page 54 for Updating BIOS with BIOS FLASHBACK+.

LAN Port LED Status Table

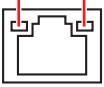

Link/ Activity LED	
Status	**Description**
Off	No link
Yellow	Linked
Blinking	Data activity

Speed LED	
Status	**Description**
Off	10 Mbps connection
Green	100 Mbps connection
Orange	1 Gbps connection

Audio Ports Configuration

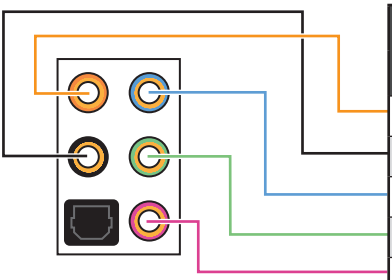

Audio Ports	Channel			
	2	4	6	8
Center/ Subwoofer Out			●	●
Rear Speaker Out		●	●	●
Line-In/ Side Speaker Out				●
Line-Out/ Front Speaker Out	●	●	●	●
Mic In				

(●: connected, **Blank**: empty)

Realtek HD Audio Manager

After installing the **Realtek HD Audio** driver, the **Realtek HD Audio Manager** icon will appear in the system tray. Double click on the icon to launch.

- **Device Selection** - allows you to select a audio output source to change the related options. The **check** sign indicates the devices as default.
- **Application Enhancement** - the array of options will provide you a complete guidance of anticipated sound effect for both output and input device.
- **Main Volume** - controls the volume or balance the right/left side of the speakers that you plugged in front or rear panel by adjust the bar.
- **Profiles** - toggles between profiles.
- **Advanced Settings** - provides the mechanism to deal with 2 independent audio streams.
- **Jack Status** - depicts all render and capture devices currently connected with your computer.
- **Connector Settings** - configures the connection settings.

Auto popup dialog

When you plug into a device at an audio jack, a dialogue window will pop up asking you which device is current connected.

Each jack corresponds to its default setting as shown on the next page.

Audio jacks to headphone and microphone diagram

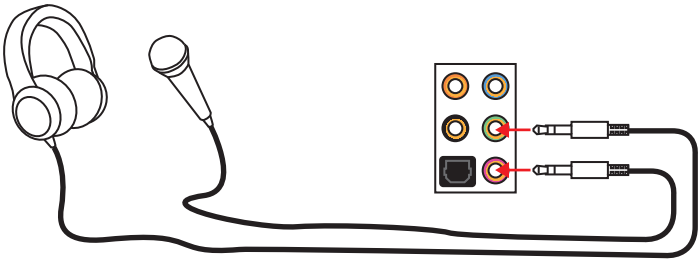

Audio jacks to stereo speakers diagram

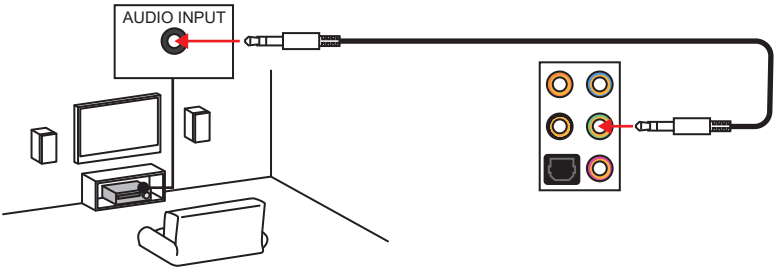

Audio jacks to 7.1-channel speakers diagram

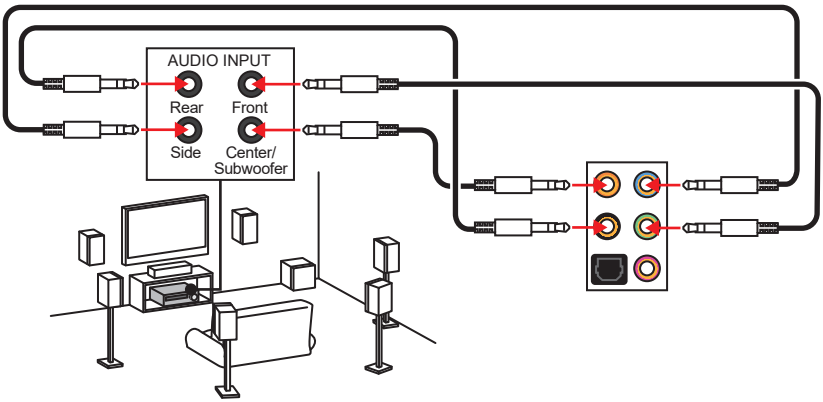

Overview of Components

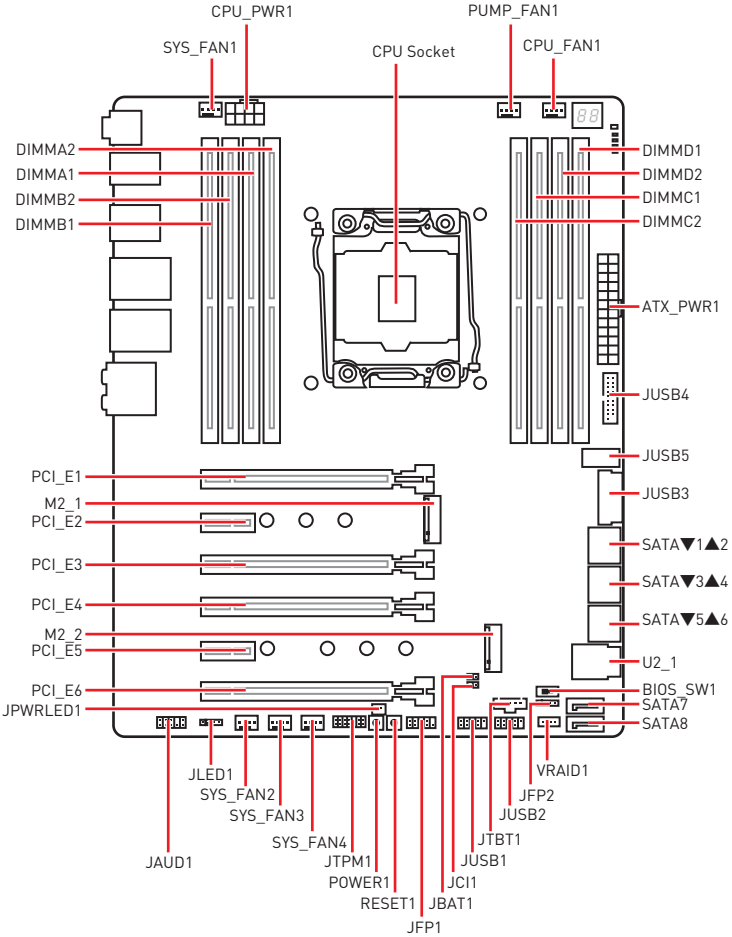

Component Contents

Port Name	Port Type	Page
BIOS_SW1	Multi-BIOS Switch	45
CPU_FAN1, PUMP_ FAN1, SYS_FAN1~4	Fan Connectors	42
CPU_PWR1, ATX_PWR1	Power Connectors	39
CPU Socket	LGA2066 CPU Socket	28
DIMMA1~DIMMD2	DIMM Slots	29
JAUD1	Front Audio Connector	43
JBAT1	Clear CMOS (Reset BIOS) Jumper	44
JCI1	Chassis Intrusion Connector	43
JFP1, JFP2	Front Panel Connectors	38
JLED1	RGB LED connector	46
JPWRLED1	LED light demonstration power input connector	48
JTBT1	Thunderbolt Add-on Card Connector	42
JTPM1	TPM Module Connector	44
JUSB1~2	USB 2.0 Connectors	40
JUSB3~4	USB 3.1 Gen1 Connectors	40
JUSB5	USB 3.1 Gen2 Type-C Connector	41
M2_1~2	M.2 Slots (Key M)	36
PCI_E1~6	PCIe Expansion Slots	32
POWER1, RESET1	Power Button, Reset Button	46
SATA1~8	SATA 6Gb/s Connectors	37
U2_1	U.2 Connector	35
VRAID1	Virtual RAID on CPU Connector	39

CPU Socket

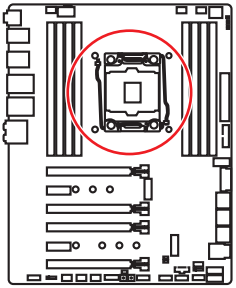

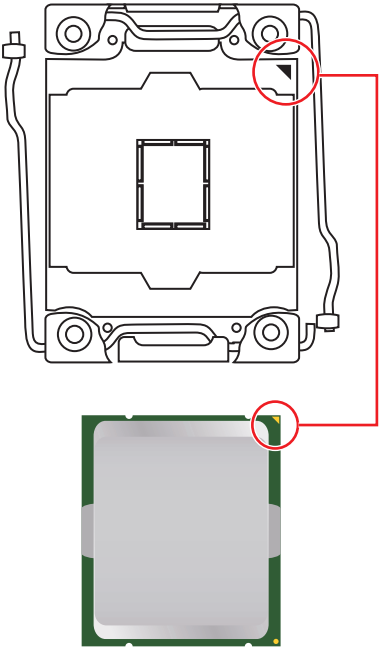

Introduction to the LGA 2066 CPU

The surface of the LGA2066 CPU has four alignment keys and a yellow triangle to assist in correctly lining up the CPU for motherboard placement. The yellow triangle is the Pin 1 indicator.

Important

- *Always unplug the power cord from the power outlet before installing or removing the CPU.*
- *Please retain the CPU protective cap after installing the processor. MSI will deal with Return Merchandise Authorization (RMA) requests if only the motherboard comes with the protective cap on the CPU socket.*
- *When installing a CPU, always remember to install a CPU heatsink. A CPU heatsink is necessary to prevent overheating and maintain system stability.*
- *Confirm that the CPU heatsink has formed a tight seal with the CPU before booting your system.*
- *Overheating can seriously damage the CPU and motherboard. Always make sure the cooling fans work properly to protect the CPU from overheating. Be sure to apply an even layer of thermal paste (or thermal tape) between the CPU and the heatsink to enhance heat dissipation.*
- *Whenever the CPU is not installed, always protect the CPU socket pins by covering the socket with the plastic cap.*
- *If you purchased a separate CPU and heatsink/ cooler, Please refer to the documentation in the heatsink/ cooler package for more details about installation.*
- *This motherboard is designed to support overclocking. Before attempting to overclock, please make sure that all other system components can tolerate overclocking. Any attempt to operate beyond product specifications is not recommended. MSI® does not guarantee the damages or risks caused by inadequate operation beyond product specifications.*

DIMM Slots

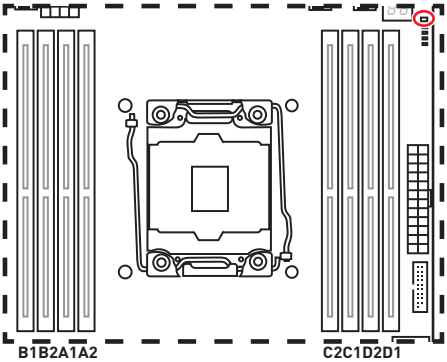

S/K LED : S/K LED indicates that the installed CPU supports either 4-channels or 2-channels memory architecture.

Red = 8 DIMMs support (4-channels architecture CPU)

White = 4 DIMMs support (2-channels architecture CPU)

Memory module installation recommendation (4-Channels architecture CPU)

	B1	B2	A1	A2	Intel Core X-series CPU	C2	C1	D2	D1
1 DIMM					Supports 4-channels memory architecture		✓		
2 DIMMs			✓				✓		
3 DIMMs	✓		✓				✓		
4 DIMMs	✓		✓				✓		✓
5 DIMMs	✓		✓			✓	✓		✓
6 DIMMs	✓		✓	✓		✓	✓		✓
7 DIMMs	✓	✓	✓	✓		✓	✓		✓
8 DIMMs	✓	✓	✓	✓		✓	✓	✓	✓

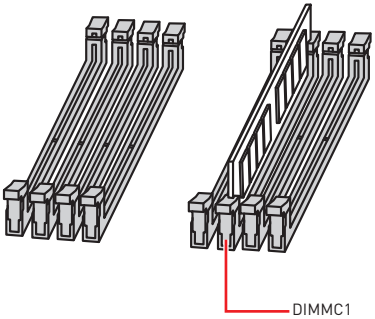

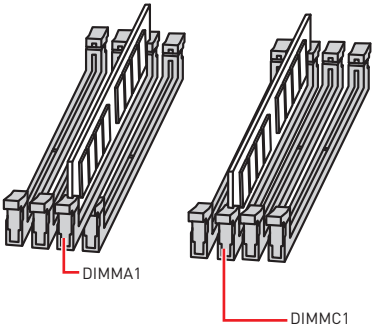

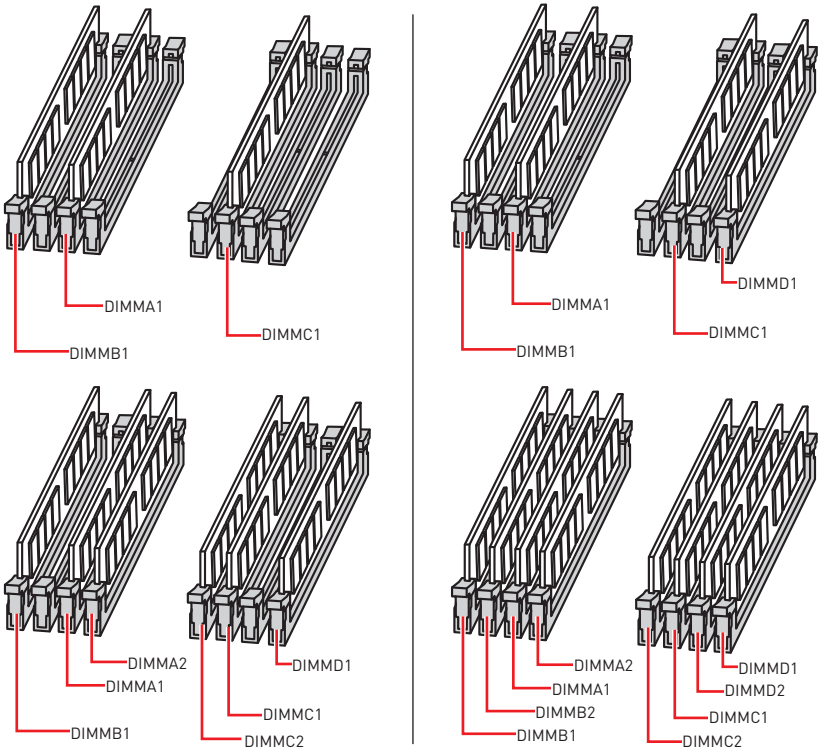

Important

- *Always insert a memory module in the **DIMMC1** slot first.*
- *To ensure system stability for Dual/ Triple/ Quad channel mode, memory modules must be of the same type, number and density. And for every channel, the odd number DIMM slot must to be installed first.*
- *Due to chipset resource usage, the available capacity of memory will be a little less than the amount of installed.*
- *Based on Intel CPU specification, the Memory DIMM voltage below 1.35V is suggested to protect the CPU.*
- *Please note that the maximum capacity of addressable memory is 4GB or less for 32-bit Windows OS due to the memory address limitation. Therefore, we recommended that you to install 64-bit Windows OS if you want to install more than 4GB memory on the motherboard.*
- *It is recommended to use a more efficient memory cooling system for full DIMMs installation or overclocking.*
- *The stability and compatibility of installed memory modules depend on installed CPU and devices when overclocking.*

Memory module installation recommendation (2-Channels architecture CPU)

	B1	B2	A1	A2	Intel Core X-series CPU	C2	C1	D2	D1
1 DIMM					Supports 2-channels memory architecture		✓		
2 DIMMs							✓		✓
3 DIMMs						✓	✓		✓
4 DIMMs						✓	✓	✓	✓

DIMMB1, B2, A1 and A2 are un-available

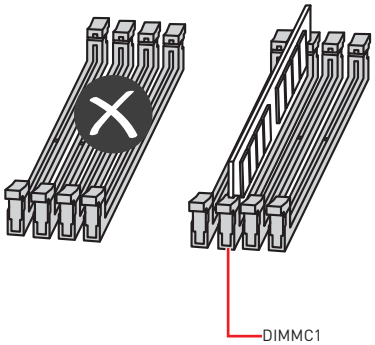

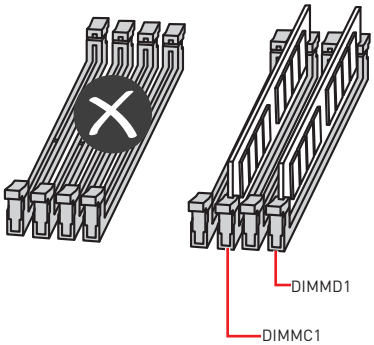

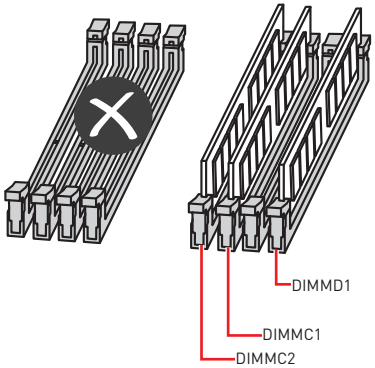

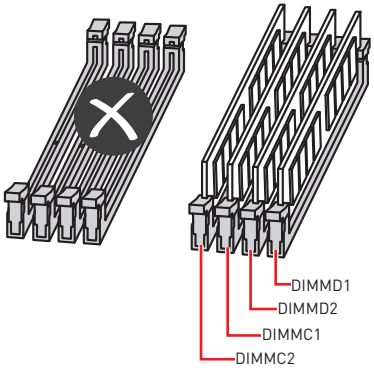

PCI_E1~6: PCIe Expansion Slots

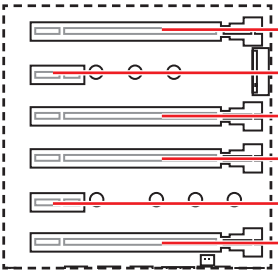

PCI_E1: PCIe 3.0 x16 (CPU lanes)

PCI_E2: PCIe 3.0 x1 (PCH lanes)

PCI_E3: PCIe 3.0 x4 (PCH lanes)

PCI_E4: PCIe 3.0 x16 (CPU lanes)

PCI_E5: PCIe 3.0 x1 (PCH lanes)

PCI_E6: PCIe 3.0 x8 (CPU lanes)

PCIe slots bandwidth table

for 44-lane CPU

Graphics Card	Single	2-Way*	2-Way	3-Way
PCI_E1	@ 3.0 x16	@ 3.0 x16	@ 3.0 x16	@ 3.0 x16
PCI_E2	3.0 x1	3.0 x1	3.0 x1	3.0 x1
PCI_E3	3.0 x4	3.0 x4	3.0 x4	3.0 x4
PCI_E4	3.0 x16	@ 3.0 x16	3.0 x16	@ 3.0 x16
PCI_E5	3.0 x1	3.0 x1	3.0 x1	3.0 x1
PCI_E6	3.0 x8	3.0 x8	@ 3.0 x8	@ 3.0 x8

(@: graphics card slot, *: best combination)

for 28-lane CPU

Graphics Card	Single	2-Way	3-Way CF
PCI_E1	@ 3.0 x16	@ 3.0 x16	@ 3.0 x16
PCI_E2	3.0 x1	3.0 x1	3.0 x1
PCI_E3	3.0 x4	3.0 x4	3.0 x4
PCI_E4	3.0 x8	@ 3.0 x8	@ 3.0 x8
PCI_E5	3.0 x1	3.0 x1	3.0 x1
PCI_E6	3.0 x4	3.0 x4	@ 3.0 x4

(@: graphics card slot, CF: CrossFire only)

for 16-lane CPU

Graphics Card	Single*	Single	2-Way	3-Way CF
PCI_E1	@ 3.0 x8	@ 3.0 x8	@ 3.0 x8	@ 3.0 x8
PCI_E2	3.0 x1	3.0 x1	3.0 x1	3.0 x1
PCI_E3	3.0 x4	3.0 x4	3.0 x4	3.0 x4
PCI_E4	3.0 x4	3.0 x8	@ 3.0 x8	@ 3.0 x4
PCI_E5	3.0 x1	3.0 x1	3.0 x1	3.0 x1
PCI_E6	3.0 x4	Empty	—	@ 3.0 x4

(@: graphics card slot, —: unavailable, *: best combination, CF: CrossFire only)

Multiple graphics cards installation recommendation

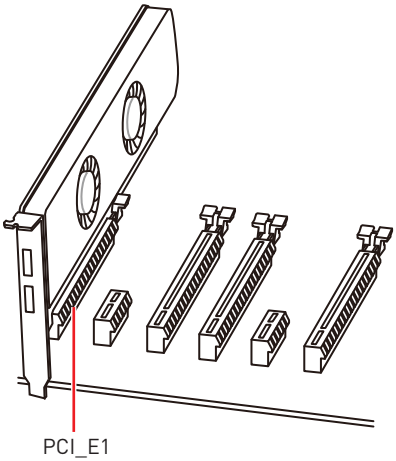

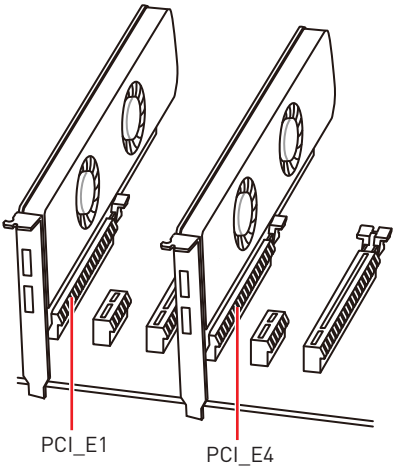

For 44 & 28 lanes CPUs

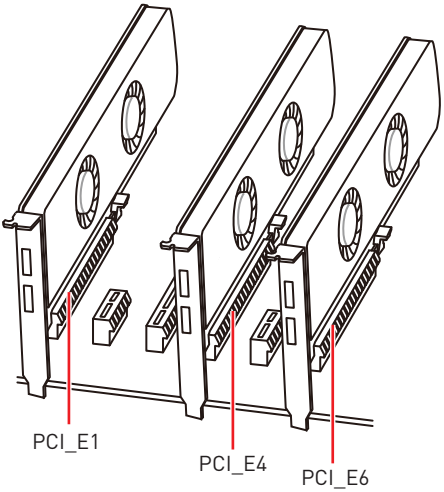

Important

If you install a large and heavy graphics card, you need to use a tool such as ***MSI Gaming Series Graphics Card Bolster*** *to support its weight and to prevent deformation of the slot.*

Important

- *For a single PCIe x16 expansion card installation with optimum performance, using the **PCI_E1** slot is recommended.*
- *When adding or removing expansion cards, always turn off the power supply and unplug the power supply power cable from the power outlet. Read the expansion card' s documentation to check for any necessary additional hardware or software changes.*

Installing SLI graphics cards

For power supply recommendations for SLI configurations, please refer to the user guide of your graphics card to make sure you meet all the system requirements.

To install SLI graphics cards:

1. Turn off your computer and disconnect the power cord, install two graphics cards into the **PCI_E1** and **PCI_E4** slots.
2. Connect the two cards together using the **SLI Bridge Connector.**

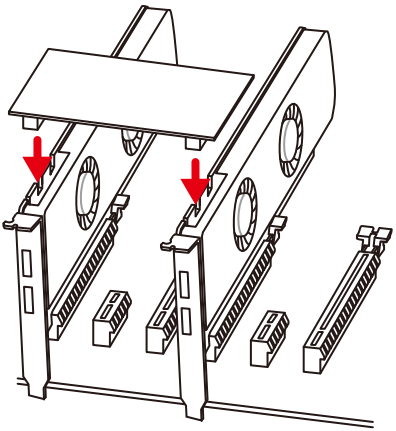

3. Connect all PCIe power connectors of the graphics cards.
4. Reconnect the power cord, power up the computer and install the drivers and software included in your graphics card package.
5. Right-click the Windows desktop and select **NVIDIA Control Panel** from the menu, click on **Configure SLI, Surround, PhysX** in the left task pane and select **Maximize 3D performance** in the SLI configuration menu, and then click **Apply**.

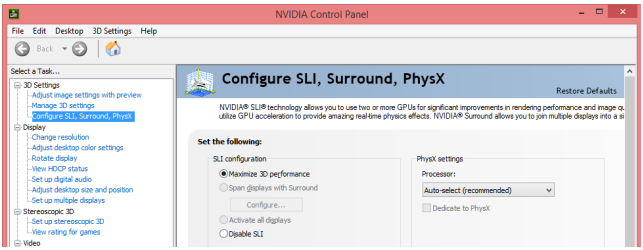

U2_1: U.2 Connector

This connector is a U.2 interface port. Each connector can connect to one PCIe 3.0 x4 NVMe storage device.

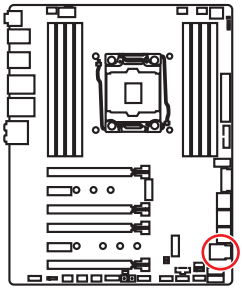

Video Demonstration

Watch the video to learn how to Install U.2 SSD. http://youtu.be/KgFvKDxymvw

Installing U.2 SSD

1. Connect the U.2 cable to the U.2 connector on the motherboard.
2. Connect the U.2 cable to the U.2 SSD.
3. Connect the U.2 cable to power adapter cable.

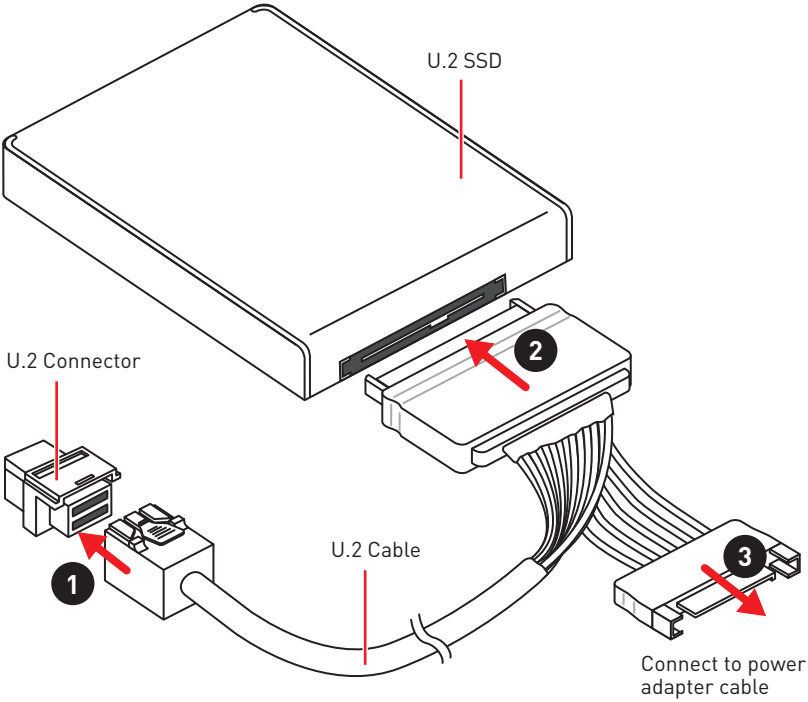

Important

PCI_E3 shares bandwidth with U2_1. If you install a PCI_E3 device, the U2_1 will be disabled.

M2_1~2: M.2 Slots (Key M)

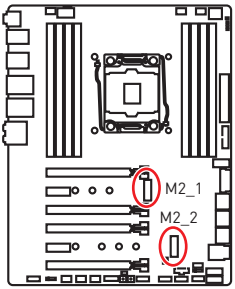

Important

- *Intel® RST only supports PCIe M.2 SSD with UEFI ROM.*
- *Intel® Optane™ Memory Ready for all M.2 slots.*

Video Demonstration

Watch the video to learn how to Install M.2 module.

http://youtu.be/JCTFABytrYA

Installing M.2 module

1. Remove the screw from the base screw.
2. Remove the base screw.
3. Tighten the base screw into the hole of the distance to the M.2 slot as the length your M.2 module.
4. Insert your M.2 module into the M.2 slot at a 30-degree angle.
5. Put the screw in the notch on the trailing edge of your M.2 module and tighten it into the base screw.

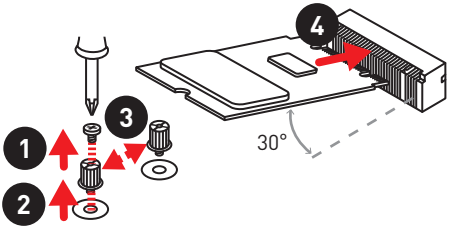

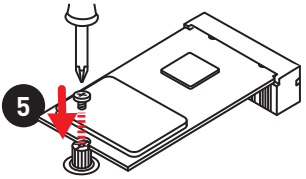

Using M.2 shield

We provide the M.2 shield on the M2_2 slot to help dissipate heat away from the M.2 module. Before installing the M.2 module for the first time, you need to remove the screw, lift the cover and **remove the protective film and the round rubber** from the thermal pad.

Important

If you don't need the M.2 shield, you can remove it.

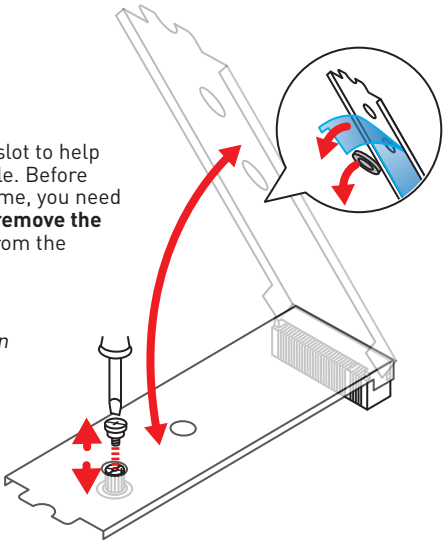

SATA1~8: SATA 6Gb/s Connectors

These connectors are SATA 6Gb/s interface ports. Each connector can connect to one SATA device.

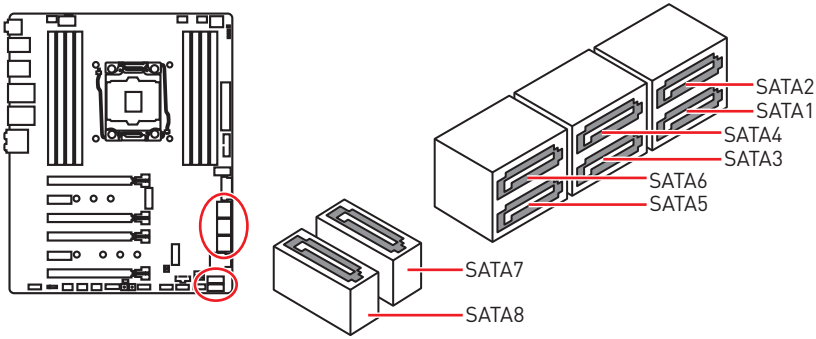

Important

- *Please do not fold the SATA cable at a 90-degree angle. Data loss may result during transmission otherwise.*
- *SATA cables have identical plugs on either sides of the cable. However, it is recommended that the flat connector be connected to the motherboard for space saving purposes.*

M.2, SATA & U.2 combination table

Slot	Combination			
U2_1	—	✓		★ PCI_E3 ◄——Share——► U2_1
PCI_E3	✓	—		
M2_1	SATA	PCIe		★ M2_1 (SATA) ◄——Share——► SATA1
SATA1	—	✓		
SATA2	✓	✓		
SATA3	✓	✓		
SATA4	✓	✓		
M2_2	—	SATA	PCIe	★ M2_2 (SATA) ◄——Share——► SATA5
SATA5	✓	—	—	
SATA6	✓	✓	—	★ M2_2 (PCIe) ◄——Share——► SATA5~8
SATA7	✓	✓	—	
SATA8	✓	✓	—	

(**SATA**: M.2 SATA SSD, **PCIe**: M.2 PCIe SSD, ✓: available, —: unavailable, ★:priority)

M.2 slots with examples of various combination possibilities

1xM.2 PCIe SSD + 8xSATA HDDs + 1xU.2 SSD

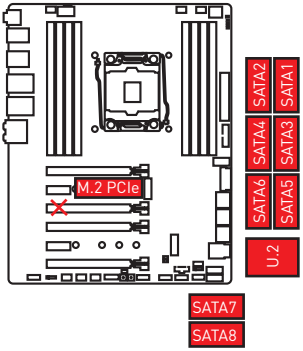

1xM.2 PCIe SSD + 1xM.2 SATA SSD +7xSATA HDDs + 1xU.2 SSD

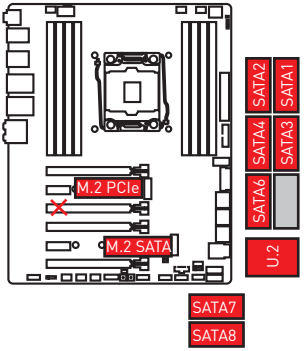

2xM.2 PCIe SSDs + 4xSATA HDDs + 1xU.2 SSD

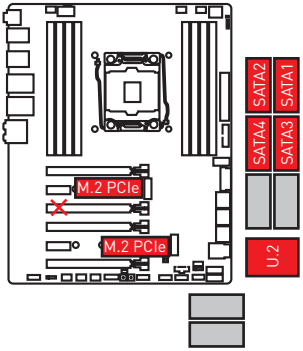

2xM.2 SATA SSDs + 6xSATA HDDs + 1xPCI_E3 device

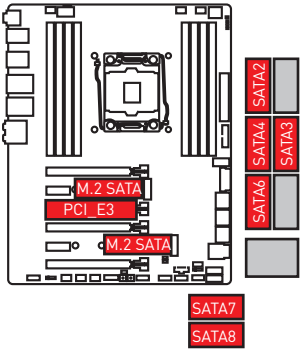

JFP1, JFP2: Front Panel Connectors

These connectors connect to the switches and LEDs on the front panel.

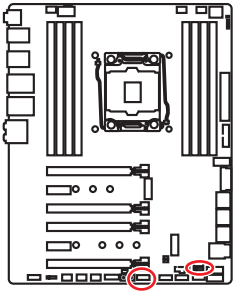

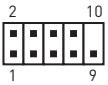

JFP1

1	HDD LED +	2	Power LED +
3	HDD LED -	4	Power LED -
5	Reset Switch	6	Power Switch
7	Reset Switch	8	Power Switch
9	Reserved	10	No Pin

JFP2

1	Speaker -	2	Buzzer +
3	Buzzer -	4	Speaker +

CPU_PWR1, ATX_PWR1: Power Connectors

These connectors allow you to connect an ATX power supply.

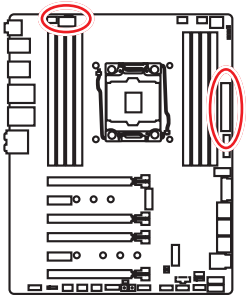

CPU_PWR1

1	Ground	5	+12V
2	Ground	6	+12V
3	Ground	7	+12V
4	Ground	8	+12V

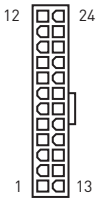

ATX_PWR1

1	+3.3V	13	+3.3V
2	+3.3V	14	-12V
3	Ground	15	Ground
4	+5V	16	PS-ON#
5	Ground	17	Ground
6	+5V	18	Ground
7	Ground	19	Ground
8	PWR OK	20	Res
9	5VSB	21	+5V
10	+12V	22	+5V
11	+12V	23	+5V
12	+3.3V	24	Ground

Important

Make sure that all the power cables are securely connected to a proper ATX power supply to ensure stable operation of the motherboard.

VRAID1: Virtual RAID on CPU Connector

This connector allows you to connect the VROC (Virtual RAID on CPU) key module. You need to enable the VROC function with Intel® RSTe (Intel® Rapid Storage Technology enterprise) driver.

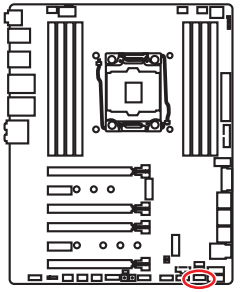

1	GND	2	VCC3
3	GND	4	SATA_RAID_KEY

Important

The VROC key module is purchased separately.

JUSB1~2: USB 2.0 Connectors

These connectors allow you to connect USB 2.0 ports on the front panel.

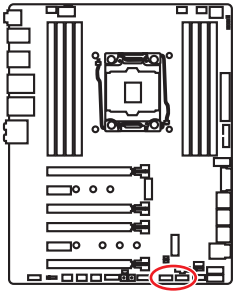

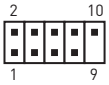

1	VCC	2	VCC
3	USB0-	4	USB1-
5	USB0+	6	USB1+
7	Ground	8	Ground
9	No Pin	10	NC

Important

- *Note that the VCC and Ground pins must be connected correctly to avoid possible damage.*
- *In order to recharge your iPad,iPhone and iPod through USB ports, please install MSI® SUPER CHARGER utility.*

JUSB3~4: USB 3.1 Gen1 Connectors

These connectors allow you to connect USB 3.1 Gen1 ports on the front panel.

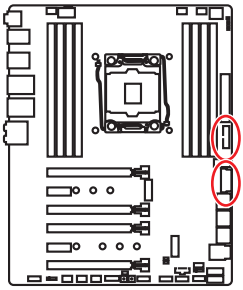

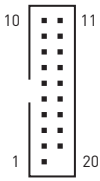

1	Power	11	USB2.0+
2	USB3_RX_DN	12	USB2.0-
3	USB3_RX_DP	13	Ground
4	Ground	14	USB3_TX_C_DP
5	USB3_TX_C_DN	15	USB3_TX_C_DN
6	USB3_TX_C_DP	16	Ground
7	Ground	17	USB3_RX_DP
8	USB2.0-	18	USB3_RX_DN
9	USB2.0+	19	Power
10	NC	20	No Pin

Important

Note that the Power and Ground pins must be connected correctly to avoid possible damage.

Charger Port

The **JUSB4** connector is a charger port which can increase USB power output for fast charging your smartphone or USB-powered devices. The Charger Port is hardware controlled by motherboard chip, it can still charge your device in suspend, hibernate state or even shutdown states. However, when you boot the computer into Windows®, you will need to install the MSI® SUPER CHARGER application to turn ON/OFF the Charging mode.

Video Demonstration

Watch the video to learn how to charge the smartphone with Super-Charger.

http://youtu.be/FCyvjr5NbOw

Important

When the Charging mode is enabled, the Charger Port data syncing will be disabled.

JUSB5: USB 3.1 Gen2 Type-C Connector

This connector allows you to connect USB 3.1 Gen2 Type-C connector on the front panel. The connector possesses a foolproof design. When you connect the cable, be sure to connect it with the corresponding orientation.

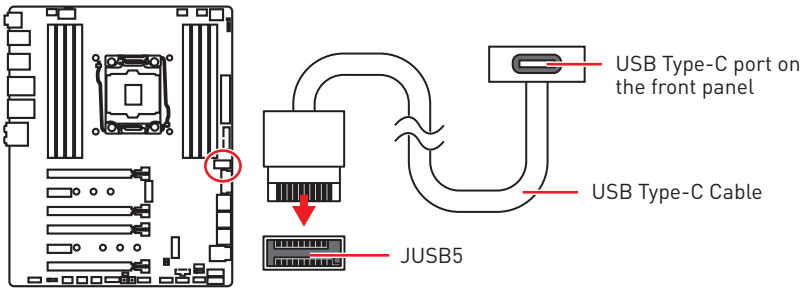

CPU_FAN1, PUMP_FAN1, SYS_FAN1~4: Fan Connectors

Fan connectors can be classified as PWM (Pulse Width Modulation) Mode or DC Mode. PWM Mode fan connectors provide constant 12V output and adjust fan speed with speed control signal. DC Mode fan connectors control fan speed by changing voltage. When you plug a 3-pin (Non-PWM) fan to a fan connector in PWM mode, the fan speed will always maintain at 100%, which might create a lot of noise. You can follow the instruction below to adjust the fan connector to PWM or DC Mode.

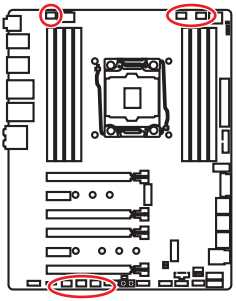

Automatically detect mode fan connectors

CPU_FAN1/ PUMP_FAN1/

Default DC Mode fan connectors

SYS_FAN1/ SYS_FAN2/ SYS_FAN3/ SYS_FAN4

Important

- *You can switch between PWM mode and DC mode and adjust fan speed in **BIOS > HARDWARE MONITOR**.*
- *Make sure fans are working properly after switching the PWM/ DC mode.*

Pin definition of fan connectors

PWM Mode pin definition			
1	Ground	2	+12V
3	Sense	4	Speed Control Signal

DC Mode pin definition			
1	Ground	2	Voltage Control
3	Sense	4	NC

JTBT1: Thunderbolt Add-on Card Connector

This connector allows you to connect the add-on Thunderbolt I/O card.

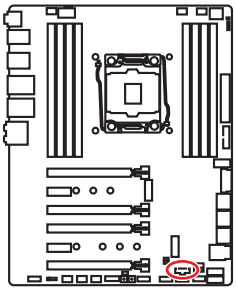

1	FORCE_PWR	2	SCI_EVENT
3	SLP_S3#	4	SLP_S5#
5	GND		

JAUD1: Front Audio Connector

This connector allows you to connect audio jacks on the front panel.

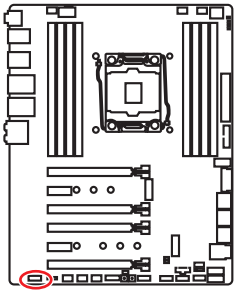

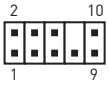

1	MIC L	2	Ground
3	MIC R	4	NC
5	Head Phone R	6	MIC Detection
7	SENSE_SEND	8	No Pin
9	Head Phone L	10	Head Phone Detection

JCI1: Chassis Intrusion Connector

This connector allows you to connect the chassis intrusion switch cable.

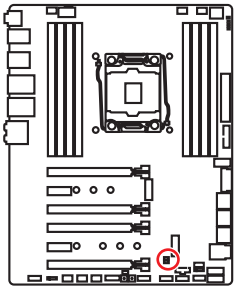

Normal

(default)

Trigger the chassis intrusion event

Using chassis intrusion detector

1. Connect the **JCI1** connector to the chassis intrusion switch/ sensor on the chassis.
2. Close the chassis cover.
3. Go to **BIOS > Settings > Security > Chassis Intrusion Configuration**.
4. Set **Chassis Intrusion** to **Enabled**.
5. Press **F10** to save and exit and then press the **Enter** key to select **Yes**.
6. Once the chassis cover is opened again, a warning message will be displayed on screen when the computer is turned on.

Resetting the chassis intrusion warning

1. Go to **BIOS > Settings > Security > Chassis Intrusion Configuration**.
2. Set **Chassis Intrusion** to **Reset**.
3. Press **F10** to save and exit and then press the **Enter** key to select **Yes**.

JTPM1: TPM Module Connector

This connector is for TPM (Trusted Platform Module). Please refer to the TPM security platform manual for more details and usages.

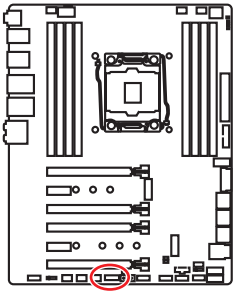

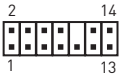

1	LPC Clock	2	3V Standby power
3	LPC Reset	4	3.3V Power
5	LPC address & data pin0	6	Serial IRQ
7	LPC address & data pin1	8	5V Power
9	LPC address & data pin2	10	No Pin
11	LPC address & data pin3	12	Ground
13	LPC Frame	14	Ground

JBAT1: Clear CMOS (Reset BIOS) Jumper

There is CMOS memory onboard that is external powered from a battery located on the motherboard to save system configuration data. If you want to clear the system configuration, set the jumpers to clear the CMOS memory.

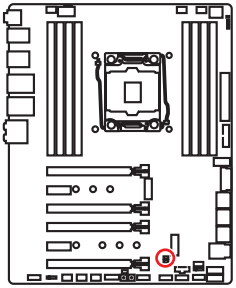

Keep Data (default)

Clear CMOS/ Reset BIOS

Resetting BIOS to default values

1. Power off the computer and unplug the power cord
2. Use a jumper cap to short JBAT1 for about 5-10 seconds.
3. Remove the jumper cap from JBAT1.
4. Plug the power cord and power on the computer.

BIOS_SW1: Multi-BIOS Switch

This motherboard has two built-in BIOS ROMs (Labeled A and B, default BIOS ROM is A). If one is crashed, you can shift to the other for booting by sliding the switch.

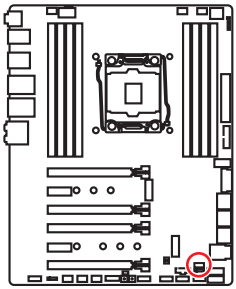

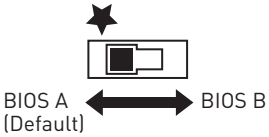

Recovering BIOS

When BIOS updating fails or causes the computer non-bootable, you can recover the failed BIOS by the steps below. Before recovering, please download the latest BIOS file that matches your motherboard model from MSI website. And then save the BIOS file to the root of the USB flash drive.

1. Power off the computer.
2. Switch to the normal BIOS ROM with **Multi-BIOS switch**.
3. Insert the USB flash drive into the computer.
4. Power on the computer and press Del key to enter BIOS setup during POST.
5. Select the **M-FLASH** tab and click on **Yes** to reboot the system and enter the flash mode.
6. Select a BIOS file to perform the BIOS recovering process.
7. Switch to the failed BIOS ROM with **Multi-BIOS switch**, and click on **Yes** to start recovering BIOS.
8. After the recovering process is completed, the system will reboot automatically

Important

- *Do not use the Multi-BIOS switch when system is booting up.*
- *You can also use the **LIVE UPDATE** or **BIOS FLASHBACK+** utility to flash BIOS. Please refer to BIOS section for details.*

POWER1, RESET1: Power Button, Reset Button

The Power / Reset button allows you to power on / reset the computer.

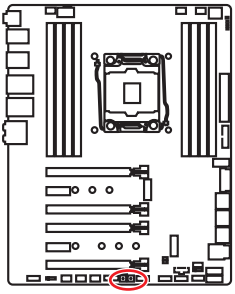

Power button

Reset button

JLED1: RGB LED connector

These connectors allow you to connect the 5050 RGB LED strips.

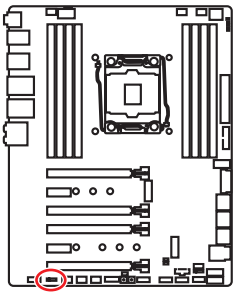

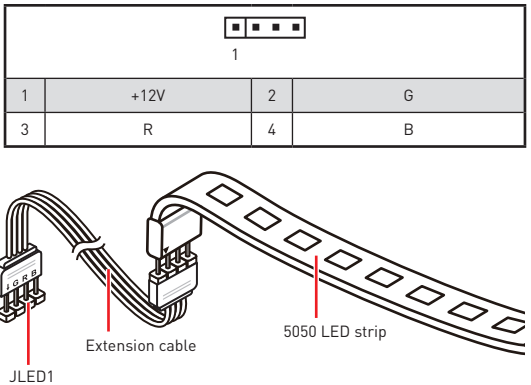

1	+12V	2	G
3	R	4	B

Important

- *This connector supports 5050 RGB multi-color LED strips (12V/G/R/B) with the maximum power rating of 3A (12V). Please keeping the LED strip shorter than 2 meters to prevent dimming.*
- *Always turn off the power supply and unplug the power cord from the power outlet before installing or removing the RGB LED strip.*
- *Please use MSI' s software to control the extended LED strip.*

Onboard LEDs

EZ Debug LED

These LEDs indicate the debug status of the motherboard.

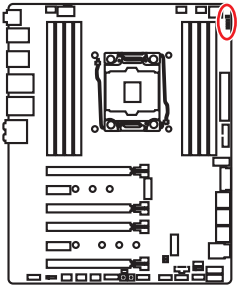

- **CPU** - indicates CPU is not detected or fail.
- **DRAM** - indicates DRAM is not detected or fail.
- **VGA** - indicates GPU is not detected or fail.
- **BOOT** - indicates the booting device is not detected or fail.

PCIe x16 slot LEDs

These LED indicate the PCIe x16 slots status.

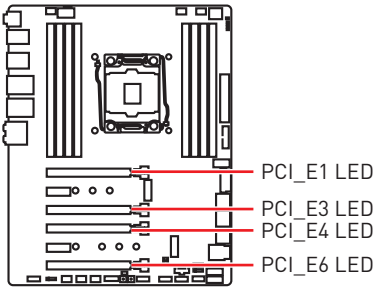

LED Color	PCIe slot status
Red	x16 mode
White	x8, x4, x1 mode

DIMM LEDs

These LED indicate the memory modules are installed.

XMP LED

This LED indicates the XMP (Extreme Memory Profile) mode is enabled.

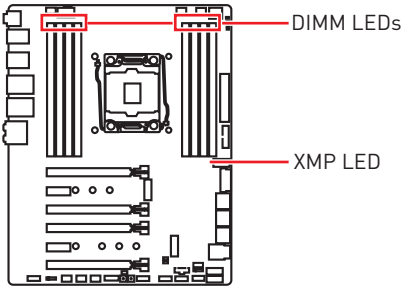

Fan LEDs

These LEDs indicate the fan control mode.

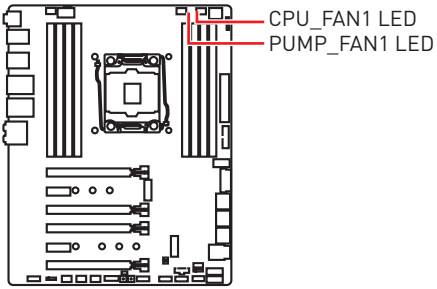

LED Color	Fan control mode
Red	PWM mode
Green	DC mode

Multi-BIOS LEDs

Multi-BIOS LEDs indicate which BIOS is in operation.

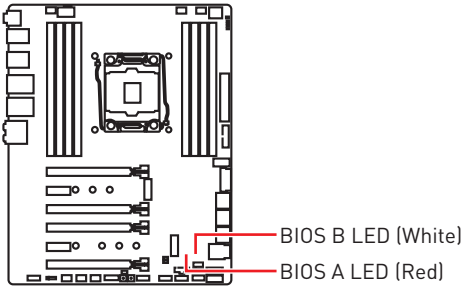

JPWRLED1: LED light demonstration power input connector

This connector is used by retailers to demonstrate onboard LED lights.

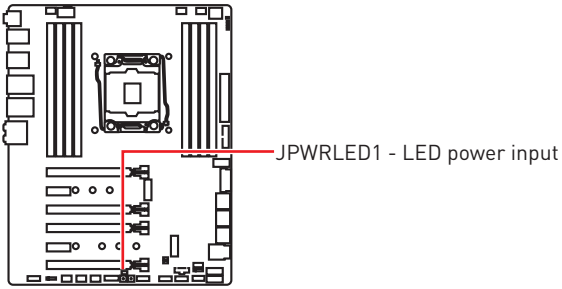

Debug Code LED

The Debug Code LED displays progress and error codes during and after POST. Refer to the Debug Code LED table for details.

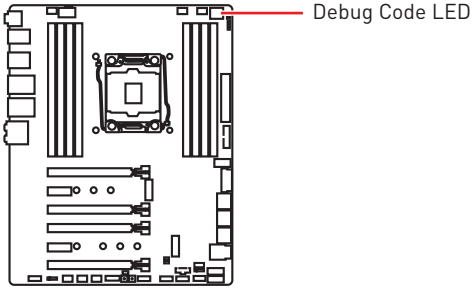

Hexadecimal Character Table

Hexadecimal	0	1	2	3	4	5	6	7	8	9	A	B	C	D	E	F
Debug Code LED display	0	1	2	3	4	5	6	7	8	9	A	b	C	d	E	F

Boot Phases

Security (SEC) – initial low-level initialization

Pre-EFI Initialization (PEI) – memory initialization

Driver Execution Environment (DXE) – main hardware initialization

Boot Device Selection (BDS) – system setup, pre-OS user interface & selecting a bootable device (CD/DVD, HDD, USB, Network, Shell, ...)

Debug Code LED Table

SEC Progress Codes

01	Power on. Reset type detection (soft/hard)
02	AP initialization before microcode loading
03	System Agent initialization before microcode loading
04	PCH initialization before microcode loading
06	Microcode loading
07	AP initialization after microcode loading
08	System Agent initialization after microcode loading
09	PCH initialization after microcode loading
0B	Cache initialization

SEC Error Codes

0C - 0D	Reserved for future AMI SEC error codes
0E	Microcode not found
0F	Microcode not loaded

PEI Progress Codes

10	PEI Core is started
11	Pre-memory CPU initialization is started
12 - 14	Pre-memory CPU initialization (CPU module specific)
15	Pre-memory System Agent initialization is started
16 - 18	Pre-Memory System Agent initialization (System Agent module specific)
19	Pre-memory PCH initialization is started
1A - 1C	Pre-memory PCH initialization (PCH module specific)
2B	Memory initialization. Serial Presence Detect (SPD) data reading

2C	Memory initialization. Memory presence detection
2D	Memory initialization. Programming memory timing information
2E	Memory initialization. Configuring memory
2F	Memory initialization (other)
31	Memory Installed
32	CPU post-memory initialization is started
33	CPU post-memory initialization. Cache initialization
34	CPU post-memory initialization. Application Processor(s) (AP) initialization
35	CPU post-memory initialization. Boot Strap Processor (BSP) selection
36	CPU post-memory initialization. System Management Mode (SMM) initialization
37	Post-Memory System Agent initialization is started
38 - 3A	Post-Memory System Agent initialization (System Agent module specific)
3B	Post-Memory PCH initialization is started
3C - 3E	Post-Memory PCH initialization (PCH module specific)
4F	DXE IPL is started

PEI Error Codes

50	Memory initialization error. Invalid memory type or incompatible memory speed
51	Memory initialization error. SPD reading has failed
52	Memory initialization error. Invalid memory size or memory modules do not match
53	Memory initialization error. No usable memory detected
54	Unspecified memory initialization error
55	Memory not installed
56	Invalid CPU type or Speed
57	CPU mismatch
58	CPU self test failed or possible CPU cache error
59	CPU micro-code is not found or micro-code update is failed
5A	Internal CPU error
5B	Reset PPI is not available
5C - 5F	Reserved for future AMI error codes

DXE Progress Codes

60	DXE Core is started
61	NVRAM initialization
62	Installation of the PCH Runtime Services
63	CPU DXE initialization is started
64 - 67	CPU DXE initialization (CPU module specific)
68	PCI host bridge initialization
69	System Agent DXE initialization is started
6A	System Agent DXE SMM initialization is started
6B - 6F	System Agent DXE initialization (System Agent module specific)
70	PCH DXE initialization is started
71	PCH DXE SMM initialization is started
72	PCH devices initialization
73 - 77	PCH DXE Initialization (PCH module specific)
78	ACPI module initialization
79	CSM initialization
7A - 7F	Reserved for future AMI DXE codes
90	Boot Device Selection (BDS) phase is started
91	Driver connecting is started
92	PCI Bus initialization is started
93	PCI Bus Hot Plug Controller Initialization
94	PCI Bus Enumeration 32
95	PCI Bus Request Resources
96	PCI Bus Assign Resources
97	Console Output devices connect
98	Console input devices connect
99	Super IO Initialization
9A	USB initialization is started
9B	USB Reset
9C	USB Detect
9D	USB Enable
9E -9F	Reserved for future AMI codes
A0	IDE initialization is started
A1	IDE Reset
A2	IDE Detect
A3	IDE Enable
A4	SCSI initialization is started
A5	SCSI Reset
A6	SCSI Detect
A7	SCSI Enable

A8	Setup Verifying Password
A9	Start of Setup
AB	Setup Input Wait
AD	Ready To Boot event
AE	Legacy Boot event
AF	Exit Boot Services event
B0	Runtime Set Virtual Address MAP Begin
B1	Runtime Set Virtual Address MAP End
B2	Legacy Option ROM Initialization
B3	System Reset
B4	USB hot plug
B5	PCI bus hot plug
B6	Clean-up of NVRAM
B7	Configuration Reset (reset of NVRAM settings)
B8 - BF	Reserved for future AMI codes

DXE Error Codes

D0	CPU initialization error
D1	System Agent initialization error
D2	PCH initialization error
D3	Some of the Architectural Protocols are not available
D4	PCI resource allocation error. Out of Resources
D5	No Space for Legacy Option ROM
D6	No Console Output Devices are found
D7	No Console Input Devices are found
D8	Invalid password
D9	Error loading Boot Option (LoadImage returned error)
DA	Boot Option is failed (StartImage returned error)
DB	Flash update is failed
DC	Reset protocol is not available

S3 Resume Progress Codes

E0	S3 Resume is stared (S3 Resume PPI is called by the DXE IPL)
E1	S3 Boot Script execution
E2	Video repost
E3	OS S3 wake vector call
E4 - E7	Reserved for future AMI progress codes

S3 Resume Error Codes

E8	S3 Resume Failed
E9	S3 Resume PPI not Found
EA	S3 Resume Boot Script Error
EB	S3 OS Wake Error
EC - EF	Reserved for future AMI error codes

Recovery Progress Codes

F0	Recovery condition triggered by firmware (Auto recovery)
F1	Recovery condition triggered by user (Forced recovery)
F2	Recovery process started
F3	Recovery firmware image is found
F4	Recovery firmware image is loaded
F5 - F7	Reserved for future AMI progress codes

Recovery Error Codes

F8	Recovery PPI is not available
F9	Recovery capsule is not found
FA	Invalid recovery capsule
FB - FF	Reserved for future AMI error codes

ACPI States Codes

The following codes appear after booting and the operating system into ACPI modes.

01	System is entering S1 sleep state
02	System is entering S2 sleep state
03	System is entering S3 sleep state
04	System is entering S4 sleep state
05	System is entering S5 sleep state
10	System is waking up from the S1 sleep state
20	System is waking up from the S2 sleep state
30	System is waking up from the S3 sleep state
40	System is waking up from the S4 sleep state
AC	System has transitioned into ACPI mode. Interrupt controller is in PIC mode.
AA	System has transitioned into ACPI mode. Interrupt controller is in APIC mode.

CPU Temperature

00 - 99	Displays current CPU temperature after the system has fully booted into the OS.

Updating LED Firmware

Updating the LED firmware can help improve lighting effect.

To update LED firmware:

1. Install and launch MSI LIVE UPDATE 6.
2. Select **BIOS Update**.
3. Click on **Scan** button. If the LED firmware needs to be updated, the version of the firmware will appear in the list.
4. Select the item in the list.

5. Click on **Total installer** button to download and install the firmware.
6. When the process is 100% completed, you need to restart your computer to enable the LED firmware.

BIOS Setup

The default settings offer the optimal performance for system stability in normal conditions. You should **always keep the default settings** to avoid possible system damage or failure booting unless you are familiar with BIOS.

Important

- *BIOS items are continuously update for better system performance. Therefore, the description may be slightly different from the latest BIOS and should be for reference only. You could also refer to the **HELP** information panel for BIOS item description.*
- *The pictures in this chapter are for reference only and may vary from the product you purchased.*

Entering BIOS Setup

Please refer the following methods to enter BIOS setup.

- Press **Delete** key, when the **Press DEL key to enter Setup Menu, F11 to enter Boot Menu** message appears on the screen during the boot process.
- Use **MSI FAST BOOT** application. Click on **GO2BIOS** button and choose **OK**. The system will reboot and enter BIOS setup directly.

Click on **GO2BIOS**

Function key

F1: General Help

F2: Add/ Remove a favorite item

F3: Enter Favorites menu

F4: Enter CPU Specifications menu

F5: Enter Memory-Z menu

F6: Load optimized defaults

F7: Switch between Advanced mode and EZ mode

F8: Load Overclocking Profile

F9: Save Overclocking Profile

F10: Save Change and Reset*

F12: Take a screenshot and save it to USB flash drive (FAT/ FAT32 format only).

Ctrl+F: Enter Search page

* When you press F10, a confirmation window appears and it provides the modification information. Select between Yes or No to confirm your choice.

Resetting BIOS

You might need to restore the default BIOS setting to solve certain problems. There are several ways to reset BIOS:

- Go to BIOS and press **F6** to load optimized defaults.
- Short the **Clear CMOS** jumper on the motherboard.

Important

*Be sure the computer is off before clearing CMOS data. Please refer to the **Clear CMOS** jumper section for resetting BIOS.*

Updating BIOS

Updating BIOS with M-FLASH

Before updating:

Please download the latest BIOS file that matches your motherboard model from MSI website. And then save the BIOS file into the USB flash drive.

Updating BIOS:

1. Press Del key to enter the BIOS Setup during POST.
2. Insert the USB flash drive that contains the update file into the computer.
3. Select the **M-FLASH** tab and click on **Yes** to reboot the system and enter the flash mode.
4. Select a BIOS file to perform the BIOS update process.
5. After the flashing process is 100% completed, the system will reboot automatically.

Updating the BIOS with Live Update 6

Before updating:

Make sure the LAN driver is already installed and the Internet connection is set properly.

Updating BIOS:

1. Install and launch MSI LIVE UPDATE 6.
2. Select **BIOS Update**.
3. Click on **Scan** button.
4. Click on **Download** icon to download and install the latest BIOS file.
5. Click **Next** and choose **In Windows mode**. And then click **Next** and **Start** to start updating BIOS.
6. After the flashing process is 100% completed, the system will restart automatically.

Updating BIOS with BIOS FLASHBACK+

Before updating:

Please download the latest BIOS file that matches your motherboard model from MSI® website and rename the BIOS file to **MSI.ROM**. And then, save the **MSI.ROM** file to the root of USB flash drive.

Important

*Only the FAT32 format USB flash drive supports updating BIOS by **BIOS FLASHBACK+**.*

1. Connect power supply to **CPU_PWR1** and **ATX_PWR1**. (No other components are necessary but power supply.)
2. Plug the USB flash drive that contains the MSI.ROM file into the BIOS FLASHBACK+ port on rear I/O panel.
3. Press the BIOS FLASHBACK+ button to flash BIOS, and the light of BIOS FLASHBACK+ button starts flashing.
4. After the flashing BIOS process is 100% completed, the button light would stop flashing and would be off simultaneously.

EZ Mode

At EZ mode, it provides the basic system information and allows you to configure the basic setting. To configure the advanced BIOS settings, please enter the Advanced Mode by pressing the **Setup Mode switch** or **F7** function key.

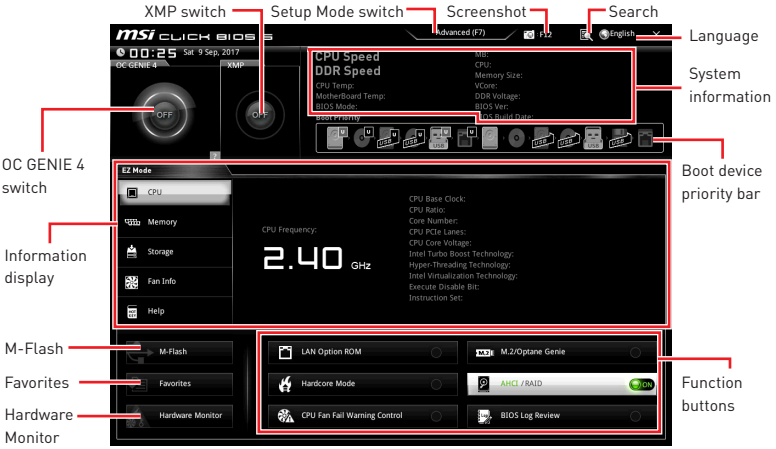

- **OC GENIE 4 switch** - click on it to toggle the **OC GENIE 4** for OC.

Important

*Please don't make any changes in OC menu and don't load defaults to keep the optimal performance and system stability after activating the **OC GENIE 4** function.*

- **XMP switch** - click on the inner circle to enable/ disable the X.M.P. (Extreme Memory Profile). Switch the outer circle to select the X.M.P. profile. This switch will only be available if the X.M.P. supported memory module is installed.

- **Setup Mode switch** - press this tab or the **F7** key to switch between Advanced mode and EZ mode.

- **Screenshot** - click on this tab or the **F12** key to take a screenshot and save it to USB flash drive (FAT/ FAT32 format only).

- **Search** - click on this tab or the **Ctrl+F** keys and the search page will show. It allows you to search by BIOS item name, enter the item name to find the item listing. Move the mouse over a blank space and right click the mouse to exit search page.

Important

In search page, only the F6, F10 and F12 function keys are available.

- **Language** - allows you to select the language of BIOS setup.

- **System information** - shows the CPU/ DDR speed, CPU/ MB temperature, MB/ CPU type, memory size, CPU/ DDR voltage, BIOS version and build date.

- **Boot device priority bar** - you can move the device icons to change the boot priority. The boot priority from high to low is left to right.

• **Information display** - click on the **CPU**, **Memory**, **Storage**, **Fan Info** and **Help** buttons on left side to display related information.

• **Function buttons** - enable or disable the **LAN Option ROM, M.2/Optane Genie, Hardcore Mode, AHCI, RAID, CPU Fan Fail Warning Control** and **BIOS Log Review** by clicking on their respective button.

▪ **Hardcore Mode** - always keep the CPU in full speed mode to maximize system performance. This feature will increase power consumption.

• **M-Flash** - click on this button to display the **M-Flash** menu that provides the way to update BIOS with a USB flash drive.

• **Hardware Monitor** - click on this button to display the **Hardware Monitor** menu that allows you to manually control the fan speed by percentage.

• **Favorites** - press the **Favorites** tab or the **F3** key to enter **Favorites** menu. It allows you to create personal BIOS menu where you can save and access favorite/ frequently-used BIOS setting items.

▪ **Default HomePage** - allows you to select a BIOS menu (e.g. SETTINGS, OC...,etc) as the BIOS home page.

▪ **Favorite1~5** - allows you to add the frequently-used/ favorite BIOS setting items in one page.

▪ **To add a BIOS item to a favorite page (Favorite 1~5)**

1. Move the mouse over a BIOS item not only on BIOS menu but also on search page.
2. Right-click or press **F2** key.
3. Choose a favorite page and click on **OK.**

▪ **To delete a BIOS item from favorite page**

1. Move the mouse over a BIOS item on favorite page (Favorite 1~5)
2. Right-click or press **F2** key.
3. Choose **Delete** and click on **OK**.

Advanced Mode

Press **Setup Mode switch** or **F7** function key can switch between EZ Mode and Advanced Mode in BIOS setup.

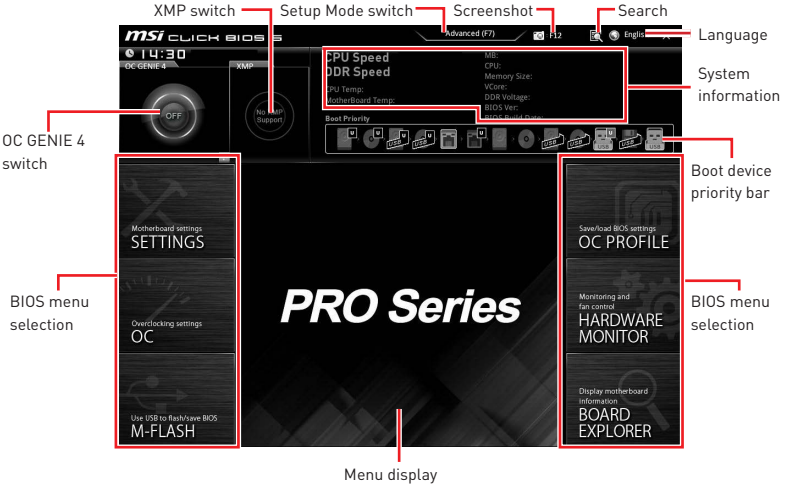

- **OC GENIE 4 switch/ XMP switch/ Setup Mode switch/ Screenshot/ Language/ System information/ Boot device priority bar** - please refer to the descriptions of EZ Mode Overview section.
- **BIOS menu selection** - the following options are available:
  - **SETTINGS** - allows you to specify the parameters for chipset and boot devices.
  - **OC** - allows you to adjust the frequency and voltage. Increasing the frequency may get better performance.
  - **M-FLASH** - provides the way to update BIOS with a USB flash drive.
  - **OC PROFILE** - allows you to manage overclocking profiles.
  - **HARDWARE MONITOR** - allows you to set the speeds of fans and monitor voltages of system.
  - **BOARD EXPLORER** - provides the information of installed devices on this motherboard.
- **Menu display** - provides BIOS setting items and information to be configured.

SETTINGS

System Status

▶ System Date

Sets the system date. Use tab key to switch between date elements.

The format is <day> <month> <date> <year>.

<day>	Day of the week, from Sun to Sat, determined by BIOS. Read-only.
<month>	The month from Jan. through Dec.
<date>	The date from 1 to 31 can be keyed by numeric function keys.
<year>	The year can be adjusted by users.

▶ System Time

Sets the system time. Use tab key to switch between time elements.

The time format is <hour> <minute> <second>.

▶ SATA PortX/ M2_X/ U2_X

Shows the information of connected SATA/ M.2/ U.2 devices.

Important

If the connected SATA device is not displayed, turn off computer and re-check SATA cable and power cable connections of the device and motherboard.

▶ System Information

Shows detailed system information, including CPU type, BIOS version, and Memory (read only).

▶ DMI Information

Shows system information, desktop Board Information and chassis Information. (Read only).

Advanced

▶ PCI Subsystem Settings

Sets PCI express interface protocol and latency timer. Press **Enter** to enter the sub-menu.

▶ PEGX - Max Link Speed [Auto]

Sets PCI Express protocol of PCIe x16 slots for matching different installed devices.

[Auto]	This item will be configured automatically by BIOS.
[Gen1]	Enables PCIe Gen1 support only.
[Gen2]	Enables PCIe Gen2 support only.
[Gen3]	Enables PCIe Gen3 support only.

▶ PCI Latency Timer [32]

Sets latency timer of PCI interface device.

[Options: 32, 64, 96, 128, 160, 192, 224, 248 PCI Bus clocks]

▶ Above 4G memory/ Crypto Currency mining [Disabled]

Enables or disables 64-bit capable devices to be decoded in above 4G address space. It is only available if the system supports 64-bit PCI decoding.

[Enabled]	Allows you to utilize more than 4x GPUs.
[Disabled]	Disables this function.

▶ ACPI Settings

Sets ACPI parameters of onboard power LED behaviors. Press **Enter** to enter the sub-menu.

▶ Power LED [Blinking]

Sets shining behaviors of the onboard Power LED.

[Dual Color]	The power LED turns to another color to indicate the S3 state.
[Blinking]	The power LED blinks to indicate the S3 state.

▶ Integrated Peripherals

Sets integrated peripherals' parameters, such as LAN, HDD, USB and audio. Press **Enter** to enter the sub-menu.

▶ Onboard LAN Controller [Enabled]

Enables or disables the onboard LAN controller.

▶ LAN Option ROM [Disabled]

Enables or disables the legacy network Boot Option ROM for detailed settings. This item will appear when **Onboard LAN Controller** is enabled.

[Enabled]	Enables the onboard LAN Boot ROM.
[Disabled]	Disables the onboard LAN Boot ROM.

▶ Network Stack [Disabled]

Sets UEFI network stack for optimizing IPv4 / IPv6 function.

[Enabled]	Enables UEFI network stack.
[Disabled]	Disables UEFI network stack.

▶ Ipv4 PXE Support [Enabled]

When **Enabled**, the system UEFI network stack will support Ipv4 protocol. This item will appear when **Network Stack** is enabled.

[Enabled] Enables the Ipv4 PXE boot support.

[Disabled] Disables the Ipv4 PXE boot support.

▶ Ipv6 PXE Support [Enabled]

When **Enabled**, the system UEFI network stack will support Ipv6 protocol. This item will appear when **Network Stack** is enabled.

[Enabled] Enables the Ipv6 PXE boot support.

[Disabled] Disables the Ipv6 PXE boot support.

▶ SATA Mode [AHCI Mode]

Sets the operation mode of the onboard SATA controller.

[AHCI Mode]	Specify the AHCI mode for SATA storage devices. AHCI (Advanced Host Controller Interface) offers some advanced features to enhance the speed and performance of SATA storage device, such as Native Command Queuing (NCQ) and hot-plugging.
[RAID Mode]	Enables RAID function for SATA storage devices.

▶ M2_1/ M2_2-RST Pcie Storage Remapping [Disabled]

Enables or disables Intel Rapid Storage Technology for M.2 PCIe devices.

▶ M.2/Optane Genie [Disabled]

Enables or disables Intel RST support for M.2 SSDs or Optane memory.

▶ SATAx Hot Plug [Disabled]

Allows user to enable or disable the SATA hot plug support.

[Enabled]	Enables hot plug support for the SATA ports.
[Disabled]	Disables hot plug support for the SATA ports.

▶ HD Audio Controller [Enabled]

Enables or disables the onboard High Definition Audio controller.

▶ HPET [Enabled]

Enables or disables the HPET (High Precision Event Timers) support.

▶ USB Configuration

Sets the onboard USB controller and device function. Press **Enter** to enter the sub-menu.

▶ USB Controller [Enabled]

Enables or disables all USB controller.

▶ XHCI Hand-off [Diasbled]

Enables or disables XHCI hand-off support for the operating system without XHCI hand-off feature.

▶ Legacy USB Support [Enabled]

Sets Legacy USB function support.

[Auto]	The system will automatically detect if any USB device is connected and enable the legacy USB support.
[Enabled]	Enable the USB support under legacy mode.
[Disabled]	The USB devices will be unavailable under legacy mode.

▶ Power Management Setup

Sets system Power Management of EuP2013 and AC Power Loss behaviors. Press **Enter** to enter the sub-menu.

▶ Restore after AC Power Loss [Power Off]

Sets the system behaviors while encountering the AC power loss.

[Power Off]	Leaves the system in power off state after restoring AC power.
[Power On]	Boot up the system after restoring AC power.
[Last State]	Restores the system to the previous state (power on/ power off) before AC power loss.

▶ System Power Fault Protection [Disabled]

Enables or disables the system to boot up when detecting abnormal voltage input.

[Enabled]	Protect the system from unexpected power operation and remain the shut down status.
[Disabled]	Disables this function.

▶ Windows OS Configuration

Sets Windows OS detailed configuration and behaviors. Press **Enter** to enter the sub-menu.

▶ Windows 10 WHQL Support [Disabled]

Enables the supports for Windows 10 or disables for other operating systems. Before enabling this item, make sure all installed devices & utilities (hardware & software) should meet the Windows 10 requirements.

[Enabled]	The system will switch to UEFI mode to meet the Windows equirement.
[Disabled]	Disables this function.

▶ MSI Fast Boot [Disabled]

MSI Fast Boot is the fastest way to boot the system. It will disable more devices to speed up system boot time which is faster than the boot time of **Fast Boot**.

[Enabled]	Enables the MSI Fast Boot function to speed up booting time. And the following **Fast Boot** field will be disabled and fixed.
[Disabled]	Disables MSI Fast Boot.

Important

*When MSI Fast Boot is enabled, you can use **MSI FAST BOOT** application to enter BIOS setup if needed. Please refer **Entering BIOS Setup** section for details.*

▶ Fast Boot [Enabled]

Enables or disables the fast boot feature for Windows 10. This item will only be available when **MSI Fast Boot** is disabled.

[Enabled]	Enables the Fast Boot configuration to accelerate system boot time.
[Disabled]	Disables the Fast Boot configuration.

▶ Secure Boot

Sets the Windows secure boot to prevent the unauthorized accessing. Press **Enter** to enter the sub-menu. This sub-menu will appear when **Windows 10 WHQL Support** is enabled.

▶ Secure Boot Support [Disabled]

Enables or disables secure boot support.

[Enabled]	Enables the secure boot function and allow you to set the secure boot settings.
[Disabled]	Disables this function.

▶ Secure Boot Mode [Standard]

Selects the secure boot mode. This item is to select how the secure boot keys be loaded. This item appears when **Secure Boot Support** is enabled.

[Standard] The system will automatically load the secure keys from BIOS.

[Custom] Allows user to configure the secure boot settings and manually load the secure keys.

▶ Key Management

Manages the secure boot keys. Press <Enter> to enter the sub-menu. This sub-menu will appear when **Secure Boot Mode** sets to **Custom**.

▶ Wake Up Event Setup

Sets system wake up behaviors for different sleep modes. Press **Enter** to enter the sub-menu.

▶ Wake Up Event By [BIOS]

Selects the wake up event by BIOS or operating system.

[BIOS] Activates the following items, set wake up events of these items.

[OS] The wake up events will be defined by OS.

▶ Resume By RTC Alarm [Disabled]

Disables or enables the system wake up by RTC Alarm.

[Enabled] Enables the system to boot up on a scheduled time/ date.

[Disabled] Disables this function.

▶ Date (of month) Alarm/ Time (hh:mm:ss) Alarm

Sets RTC alarm date/ Time. If Resume By RTC Alarm is set to [Enabled], the system will automatically resume (boot up) on a specified date/hour/minute/second in these fields (using the **+** and **-** keys to select the date & time settings).

▶ Resume By PCI-E Device [Disabled]

Enables or disables the wake up function of installed PCI-E expansion cards, integrated LAN controllers or USB devices which are supported by third party integrated chips.

[Enabled] Enables the system to be awakened from the power saving modes when activity or input signal of PCIe device is detected.

[Disabled] Disables this function.

▶ Resume By Onboard Intel LAN [Disabled]

Enables or disables the system wake up by Onboard Intel LAN.

[Enabled] Enables the system to be awakened from the power saving modes when activity or input signal of Intel LAN device is detected.

[Disabled] Disables this function.

▶ Resume by USB Device [Disabled]

Enables or disables the system wake up by USB devices.

[Enabled] Enables the system to be awakened from sleep state when activity of USB device is detected.

[Disabled] Disables this function.

▶ Resume From S3/S4/S5 by PS/2 Mouse [Disabled]

Enables or disables the system wake up by PS/2 mouse.

[Enabled]	Enables the system to be awakened from S3/ S4/ S5 state when activity of PS/2 mouse is detected.
[Disabled]	Disables this function.

▶ Resume From S3/S4/S5 by PS/2 Keyboard [Disabled]

Enables or disables the system wake up by PS/2 keyboard.

[Any Key]	Enables the system to be awakened from S3/ S4/ S5 state when activity of any key on PS/2 keyboard is detected.
[Hot Key]	Enables the system to be awakened from S3/ S4/ S5 state when activity of hot key on PS/2 keyboard is detected.
[Disabled]	Disables this function.

▶ Hot Key [Ctrl+Space]

Selects a combination of keys as a hot key to wake the system. This item appears when you set the Resume From S3/S4/S5 by PS/2 Keyboard to **Hot Key**.

▶ Secure Erase+

Enables or disables Secure Erase+ function. **Secure Erase+** is the best way to effectively wipe all data from a SSD. Please note that data of SSD will be erased after enabling **Secure Erase+**.

▶ Intel (R) Ethernet Connection 1219-V

Shows driver information and configuration of the ethernet controller parameter.

Boot

Sets the sequence of system boot devices.

▶ Full Screen Logo Display [Enabled]

Enables or disables to show the full screen logo while system POST.

[Enabled]	Shows the logo in full screen.
[Disabled]	Shows the POST messages.

▶ GO2BIOS [Disabled]

Allows system to enter BIOS setup directly by pressing the Power button for 4 sec pon bootup.

[Enabled]	The system boots straight to the BIOS setup by long pressing the power button about 4 seconds when the system is off.
[Disabled]	Disables this function.

▶ Bootup NumLock State [On]

Select the keyboard NumLock state upon bootup.

▶ Info Block effect [Unlock]

Sets the state of Help information block.

[Unlock]	Sliding effect.
[Lock]	Fix the **Help** information block on the screen.

▶ AUTO CLR_CMOS [Disabled]

Enables or disables the CMOS data to be resumed automatically when the booting process hang-up over 5 seconds.

▶ Boot Mode Select [LEGACY+UEFI]

Sets the system boot mode from legacy or UEFI architecture depending on OS installation requirement. This item will become un-selectable and will be configured automatically by BIOS when **Windows 8.1/ 10 WHQL Support** is enabled.

[UEFI]	Enables UEFI BIOS boot mode support only.
[LEGACY+UEFI]	Enables both Legacy BIOS boot mode and UEFI BIOS boot mode.

▶ FIXED BOOT ORDER Priorities

Sets device priority for system boot.

▶ Boot Option Priorities

These items are used to prioritize the installed boot devices.

Security

▶ Administrator Password

Sets administrator password for system security. User has full rights to change the BIOS items with administrator password. After setting the administrator password, the state of this item will show **Installed**.

▶ User Password

Sets User Password for system security. User has limited rights to change the BIOS items with user password. This item will be available when administrator password is set. After setting the user password, the state of this item will show **Installed**.

▶ Password Check [Setup]

Selects a condition that will request the password.

[Setup]	A password will be requested for entering the BIOS Setup.
[Boot]	A password will be requested for booting the system.

▶ Password Clear [Enabled]

Enables or disables the clear CMOS behavior to clear a set password.

[Enabled]	The password will be erased after clear CMOS.
[Disabled]	The password will always be kept.

Important

- *When selecting the Administrator / User Password items, a password box will appear on the screen. Type the password then press **Enter**. The password typed now will replace any previous set password from CMOS memory. You will be prompted to confirm the password. You may also press **Esc** key to abort the selection.*
- *To clear a set password, press **Enter** when you are prompted to enter a new password. A message will confirm the password is being disabled. Once the password is disabled, you can enter the setup and OS without authorization.*

▶ **Trusted Computing**

Sets TPM (Trusted Platform Module) function.

▶ **Security Device Support [Disabled]**

Enables or disables the TPM function to build the endorsement key for accessing the system.

▶ **Chassis Intrusion Configuration**

Press <Enter> to enter the sub-menu.

▶ **Chassis Intrusion [Disabled]**

Enables or disables recording messages when the chassis is opened. This function is ready for the chassis equips a chassis intrusion switch.

[Enabled]	Once the chassis is opened, the system will record and issue a warning message.
[Reset]	Clear the warning message. After clearing the message, please return to **Enabled** or **Disabled**.
[Disabled]	Disables this funcion.

Save & Exit

▶ **Discard Changes and Exit**

Exit BIOS setup without saving any change.

▶ **Save Changes and Reboot**

Save all changes and reboot the system.

▶ **Save Changes**

Save current changes.

▶ **Discard Changes**

Discard all changes and restore to the previous values.

▶ **Restore Defaults**

Restore or load all default values.

▶ **Boot Override**

The installed bootable devices will appear on this menu, you can select one of them to be the boot device.

OC

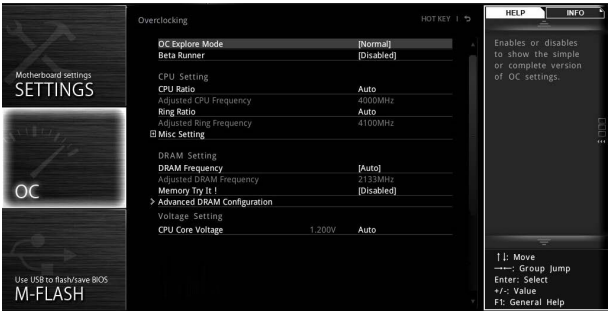

Important

- *Overclocking your PC manually is only recommended for advanced users.*
- *Overclocking is not guaranteed, and if done improperly, it could void your warranty or severely damage your hardware.*
- *If you are unfamiliar with overclocking, we advise you to use **GAME BOOST** function for easy overclocking.*

▶ OC Explore Mode [Normal]

Enables or disables to show the normal or expert version of OC settings.

[Normal] Provides the regular OC settings in BIOS setup.

[Expert] Provides the advanced OC settings for OC expert to configure in BIOS setup.

Note: We use * as the symbol for the OC settings of Expert mode.

▶ CPU Ratio Apply Mode [All Core]*

Sets applied mode for CPU ratio. This item only appears when a CPU that supports **Turbo Boost** is installed.

[All Core] Activate the **CPU Ratio** field. All CPU cores will run the same CPU ratio that be set in **CPU Ratio**.

[Per Core] Activate the **X-Core Ratio Limit** field. Sets each CPU core ratio separately in **X-Core Ratio Limit**.

▶ CPU Ratio [Auto]

Sets the CPU ratio that is used to determine CPU clock speed. This item can only be changed if the processor supports this function.

▶ Adjusted CPU Frequency

Shows the adjusted CPU frequency. Read-only.

▶ CPU Ratio Mode [Dynamic Mode]*

Selects the CPU Ratio operating mode. This item will appear when you set the CPU ratio manually.

[Fixed Mode]	Fixes the CPU ratio.
[Dynamic Mode]	CPU ratio will be changed dynamically according to the CPU loading.

▶ CPU Ratio Offset When Running AVX [Auto]

Sets a offset value to lower the CPU core ratio. It could be helpful for heat dissipation when running AVX instruction set. If set to Auto, BIOS will configure this setting automatically. This item appears when the installed CPU supports this function.

▶ Ring Ratio [Auto]

Sets the ring ratio. The valid value range depends on the installed CPU.

▶ Adjusted Ring Frequency

Shows the adjusted Ring frequency. Read-only.

▶ Misc Setting*

Press Enter, + or - key to open or close the following 3 items related to CPU features.

▶ EIST [Enabled]*

Enables or disables the Enhanced Intel® SpeedStep Technology.

[Enabled]	Enables the EIST to adjust CPU voltage and core frequency dynamically. It can decrease average power consumption and average heat production.
[Disabled]	Disables EIST.

▶ Intel Turbo Boost [Enabled]*

Enables or disables the Intel® Turbo Boost. This item appears when the installed CPU supports this function.

[Enabled]	Enables this function to boost CPU performance automatically above rated specifications when system request the highest performance state.
[Disabled]	Disables this function.

▶ Enhanced Turbo [Auto]*

Enables or disables Enhanced Turbo function for all CPU cores to boost CPU performance. This item appears when the installed CPU supports this function.

[Auto]	This setting will be configured automatically by BIOS.
[Enabled]	All CPU cores would be increased to maximum turbo ratio.
[Disabled]	Disables this function.

▶ Extreme Memory Profile (X.M.P.) [Disabled]

X.M.P. (Extreme Memory Profile) is the overclocking technology by memory module. Please enable XMP or select a profile of memory module for overclocking the memory. This item will be available when the memory modules that support X.M.P. is installed.

▶ DRAM Reference Clock [Auto]*

Sets the DRAM reference clock. The valid value range depends on the installed CPU. This item appears when a CPU that supports this adjustment is installed.

▶ DRAM Frequency [Auto]

Sets the DRAM frequency. Please note the overclocking behavior is not guaranteed.

▶ Adjusted DRAM Frequency

Shows the adjusted DRAM frequency. Read-only.

▶ DRAM Timing Mode [Link]

Selects the memory timing mode.

[Link]	Allows user to configure the DRAM timing for all memory channel.
[UnLink]	Allows user to configure the DRAM timing for respective memory channel.

▶ Advanced DRAM Configuration

Press **Enter** to enter the sub-menu. User can set the memory timing for each/ all memory channel. The system may become un-stable or un-bootable after changing memory timing. If it occurs, please clear the CMOS data and restore the default settings. (Refer to the Clear CMOS jumper/ button section to clear the CMOS data, and enter the BIOS to load the default settings.)

▶ Memory Fast Boot [Auto]*

Enables or disables the initiation and training for memory every booting.

[Auto]	The setting will be configured automatically by BIOS.
[Enabled]	System will completely keep the archives of first intiation and training for memory. So the memory will not be initialed and trained when booting to accelerate the system booting time.
[Disabled]	The memory will be initialed and trained every booting.

▶ DigitALL Power

Press **Enter** to enter the sub-menu. Controls the digital powers related to CPU PWM.

▶ SVID Communication [Auto]*

Enables or disables SVID (Serial Voltage Identification) support.

[Auto]	This setting will be configured automatically by BIOS.
[Enabled]	PWM phase will be changed dynamically according to the CPU SVID (Serial Voltage Identification).
[Disabled]	Disables SVID (Serial Voltage Identification) support.

▶ VCCIN Voltage [Auto]

Sets the CPU input voltage. The CPU input voltage is the CPU power source that is shared with components of the CPU.

▶ CPU Voltages control [Auto]

These options allows you to set the voltages related to CPU. If set to **Auto**, BIOS will set these voltages automatically or you can set it manually.

▶ DRAM Voltages control [Auto]

These options allows you to set the voltages related to memory. If set to **Auto**, BIOS will set these voltages automatically or you can set it manually.

▶ PCH Voltages control [Auto] (optional)

These options allows you to set the voltages related to PCH. If set to **Auto**, BIOS will set these voltages automatically or you can set it manually.

▶ CPU Memory Changed Detect [Enabled]*

Enables or disables the system to issue a warning message during boot when the CPU or memory has been replaced.

[Enabled]	The system will issue a warning message during boot and than needs to load the default settings for new devices.
[Disabled]	Disables this function and keeps the current BIOS settings.

▶ CPU Specifications

Press **Enter** to enter the sub-menu. This sub-menu displays the information of installed CPU. You can also access this information menu at any time by pressing [F4]. Read only.

▶ CPU Technology Support

Press **Enter** to enter the sub-menu. The sub-menu shows the key features of installed CPU. Read only.

▶ MEMORY-Z

Press **Enter** to enter the sub-menu. This sub-menu displays all the settings and timings of installed memory. You can also access this information menu at any time by pressing [F5].

▶ DIMMx Memory SPD

Press **Enter** to enter the sub-menu. The sub-menu displays the information of installed memory. Read only.

▶ CPU Features

Press **Enter** to enter the sub-menu.

▶ Hyper-Threading [Enabled]

Intel Hyper-Threading technology treats the multi cores inside the processor as multi logical processors that can execute instructions simultaneously. In this way, the system performance is highly improved. This item appears when the installed CPU supports this technology.

[Enable]	Enables Intel Hyper-Threading technology.
[Disabled]	Disables this item if the system does not support HT function.

▶ Limit CPUID Maximum [Disabled]

Enables or disables the extended CPUID value.

[Enabled]	BIOS limits the maximum CPUID input value to circumvent boot problems with older operating system that do not support the processor with extended CPUID value.
[Disabled]	Use the actual maximum CPUID input value.

▶ Intel Virtualization Tech [Enabled]

Enables or disables Intel Virtualization technology.

[Enabled]	Enables Intel Virtualization technology and allows a platform to run multiple operating systems in independent partitions. The system can function as multiple systems virtually.
[Disabled]	Disables this function.

▶ Intel VT-D Tech [Disabled]

Enables or disables Intel VT-D (Intel Virtualization for Directed I/O) technology.

▶ Hardware Prefetcher [Enabled]

Enables or disables the hardware prefetcher (MLC Streamer prefetcher).

[Enabled] Allows the hardware prefetcher to automatically pre-fetch data and instructions into L2 cache from memory for tuning the CPU performance.

[Disabled] Disables the hardware prefetcher.

▶ Adjacent Cache Line Prefetch [Enabled]

Enables or disables the CPU hardware prefetcher (MLC Spatial prefetcher).

[Enabled] Enables adjacent cache line prefetching for reducing the cache latency time and tuning the performance to the specific application.

[Disabled] Enables the requested cache line only.

▶ CPU AES Instructions [Enabled]

Enables or disables the CPU AES (Advanced Encryption Standard-New Instructions) support. This item appears when a CPU supports this function.

▶ Intel Adaptive Thermal Monitor [Enabled]

Enables or disables the Intel adaptive thermal monitor function to protect the CPU from overheating.

[Enabled] Throttles down the CPU core clock speed when the CPU is over the adaptive temperature.

[Disabled] Disables this function.

▶ Intel C-State [Auto]

Enables or disables the Intel C-state. C-state is a processor power management technology defined by ACPI.

[Auto] This setting will be configured automatically by BIOS.

[Enabled] Detects the idle state of system and reduce CPU power consumption accordingly.

[Disabled] Disable this function.

▶ C1E Support [Disabled]

Enables or disables the C1E function for power-saving in halt state. This item appears when **Intel C-State** is enabled.

[Enabled] Enables C1E function to reduce the CPU frequency and voltage for power-saving in halt state.

[Disabled] Disables this function.

▶ Package C State Limit [Auto]

This item allows you to select a CPU C-state level for power-saving when system is idle. The options of C-state depend on the installed CPU. This item appears when **Intel C-State** is enabled.

▶ CFG Lock [Enabled]

Lock or un-lock the MSR 0xE2[15], CFG lock bit.

[Enabled] Locks the CFG lock bit.

[Disabled] Un-locks the CFG lock bit.

▶ Long Duration Power Limit (W) [Auto]

Sets the long duration TDP power limit for CPU in Turbo Boost mode.

▶ Long Duration Maintained (s) [Auto]

Sets the maintaining time for Long duration power Limit(W).

▶ Short Duration Power Limit (W) [Auto]

Sets the short duration TDP power limit for CPU in Turbo Boost mode.

▶ CPU Current Limit (A) [Auto]

Sets maximum current limit of CPU package in Turbo Boost mode. When the current is over the specified value, the CPU will automatically reduce the core frequency for reducing the current.

▶ Internal VR OVP OCP Protection [Auto]

Enables or disables the over-voltage protection and over-current protection for CPU internal VR (Voltage Regulator).

[Auto]	This setting will be configured automatically by BIOS.
[Enabled]	Enables the limitation of internal VR for over-voltage protection and over-current protection.
[Disabled]	Disables this function for overclocking.

▶ Internal VR Efficiency Management [Auto]

Enables or disables the CPU internal VR efficiency management.

[Auto] This setting will be configured automatically by BIOS.

[Enabled] Enables the VR effciency management for power-saving control.

[Disabled] Disables this function.

M-FLASH

M-FLASH provides the way to update BIOS with a USB flash drive. Please down-load the latest BIOS file that matches your motherboard model from MSI website, save the BIOS file into your USB flash drive. And then follow the steps below to update BIOS.

1. Insert the USB flash drive that contains the update file into the computer.
2. Click on **M-FLASH** tab, a demand message will be prompted. Click on **Yes** to reboot and enter the flash mode.

3. The system will enter the flash mode and a file selection menu will appear after rebooting.

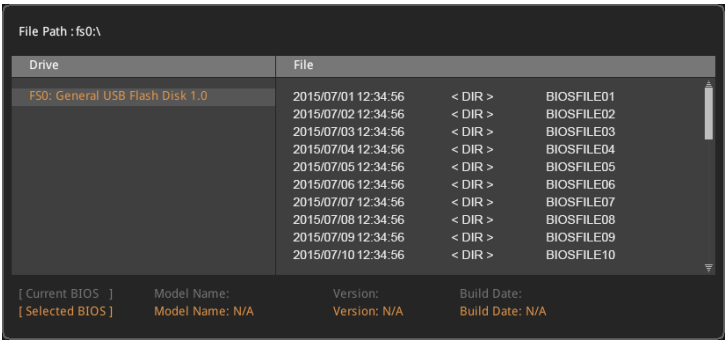

4. Select a BIOS file to perform the BIOS update process.
5. A message will pop-up. Please select a target BIOS ROM by switching the Multi-BIOS switch and then clicks on OK to start the flashing process.

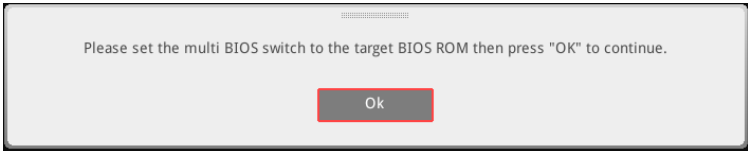

6. After the flashing process is 100% completed, the system will reboot automatically.

OC PROFILE

▶ Overclocking Profile 1/ 2/ 3/ 4/ 5/ 6

Overclocking Profile 1/ 2/ 3/ 4/ 5/ 6 management. Press <Enter> to enter the sub-menu.

▶ Set Name for Overclocking Profile 1/ 2/ 3/ 4/ 5/ 6

Name the current overclocking profile.

▶ Save Overclocking Profile 1/ 2/ 3/ 4/ 5/ 6

Save the current overclocking profile.

▶ Load Overclocking Profile 1/ 2/ 3/ 4/ 5/ 6

Load the current overclocking profile.

▶ Clear Overclocking Profile 1/ 2/ 3/ 4/ 5/ 6

Clear the current overclocking profile.

▶ OC Profile Load from ROM

Load OC profile from BIOS ROM.

▶ OC Profile Save to USB

Save OC profile to the USB flash drive. The USB flash drive should be FAT/ FAT32 format only.

▶ OC Profile Load from USB

Load OC profile from the USB flash drive. The USB flash drive should be FAT/ FAT32 format only.

Software Description

Installing Windows® 10

1. Power on the computer.
2. Insert the Windows® 10 disc into your optical drive.
3. Press the **Restart** button on the computer case.
4. Press **F11** key during the computer POST (Power-On Self Test) to get into Boot Menu.
5. Select your optical drive from the Boot Menu.
6. Press any key when screen shows **Press any key to boot from CD or DVD...** message.
7. Follow the instructions on the screen to install Windows® 10.

Installing Drivers

1. Start up your computer in Windows® 10.
2. Insert MSI® Driver Disc into your optical drive.
3. The installer will automatically appear and it will find and list all necessary drivers.
4. Click **Install** button.
5. The software installation will then be in progress, after it has finished it will prompt you to restart.
6. Click **OK** button to finish.
7. Restart your computer.

Installing Utilities

Before you install utilities, you must complete drivers installation.

1. Insert MSI® Driver Disc into your optical drive.
2. The installer will automatically appear.
3. Click **Utilities** tab.
4. Select the utilities you want to install.
5. Click **Install** button.
6. The utilities installation will then be in progress, after it has finished it will prompt you to restart.
7. Click **OK** button to finish.
8. Restart your computer.

APP MANAGER

APP MANAGER is a handy management application for integration of MSI applications and software interface. Providing easy shortcut entrance and real-time update information of all the MSI software and applications.

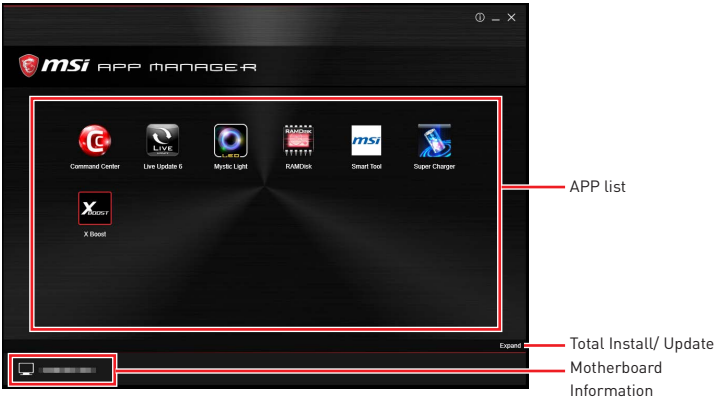

- **APP list** - shows all the applications and software be supported by this motherboard. An icon represents a entrance to the application rather than the application itself.
  - **Colorful icon** - a colorful icon means that the application had have been installed successfully and is available. Double click on desired icon to access the application. A refresh icon shows to inform you that the application has a update version.
  - **Gray icon** - the icon with gray painting means that the application is not available and you have to install it if needed. Double click on the gray icon and the update information will show. Click on the **INSTALL** button to install the application.
- **Motherboard Information** - shows the model name of motherboard.
- **Total Install/ Update** - click on this tab to update/ install all the applications.

Important

Please note that, once you uninstall the APP MANAGER, all the MSI applications and software will be uninstalled simultaneously.

LIVE UPDATE 6

LIVE UPDATE 6 is an application for the MSI® system to scan and download the latest drivers, BIOS and utilities. With LIVE UPDATE 6, you don't need to search the drivers on websites, and don't need to know the models of motherboard and graphics cards. LIVE UPDATE 6 will download the appropriate drivers automatically.

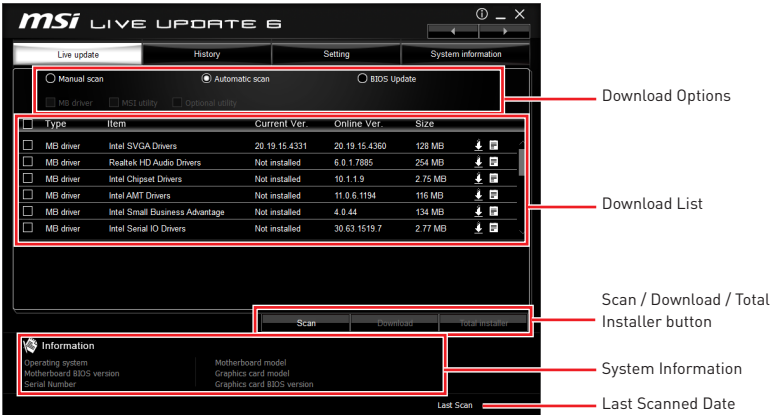

There are **Live Update, History, Setting** and **System Information** tabs at the top. You can click the tab to switch the control panel.

- **Live Update** - When you launch LIVE UPDATE 6, you will see the Live update tab at first. This tab allows you to select files to download. You can also read the relevant information by clicking the information icon on the right of the item listed.
- **History** - shows the downloading history.
- **Setting** - allows you to specify the frequency that LIVE UPDATE 6 remind you to update.
- **System Information** - displays the information of the system.
- **FAQ** - shows Frequently Asked Questions.
- **Online Help** - shows Online Help information.

Updating The System

This section describes how to update your system with LIVE UPDATE 6. Please follow the steps below:

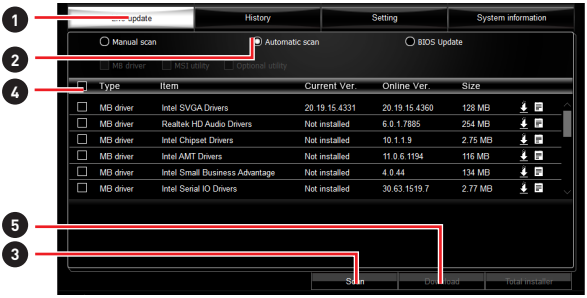

1. Select the **Live Update** tab.
2. Choose **Automatic scan**, system will automatically scan all the items and search for the latest update files. Or you can choose **Manual scan** and select the items you wish to scan.
3. Click the **Scan** button at the bottom. It may take several moments to complete the process.
4. When the download list appears, please select the items you intend to update.
5. Click **Download** button at the bottom.
6. When **Save Path** prompt, you can specify a download directory.

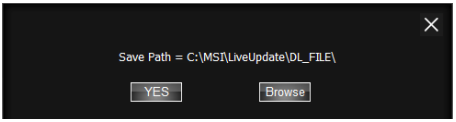

7. When downloading you will see the screen below. It may take several moments to complete the process.

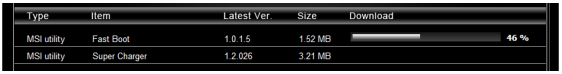

8. To install the applications, simply unpack the packages and install.

Total Installer

Total Installer is a convenient feature to simplify frequent installing procedure. To use Total Installer:

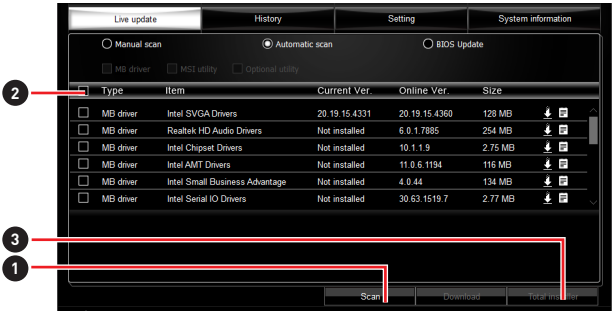

1. **Scan** updates in **Live Update** tab.
2. Check the **Select All** check-box you intend to update.
3. Click the **Total Installer** button. LIVE UPDATE 6 will automatically install them.
4. When prompted, click **OK** to complete the Total Installer procedure
5. Reboot your system.

COMMAND CENTER

COMMAND CENTER is an user-friendly software and exclusively developed by MSI, helping users to adjust system settings and monitor status under OS. With the help of COMMAND CENTER, making it possible to achieve easier and efficient monitoring process and adjustments than that under BIOS. In addition, the COMMAND CENTER can be a server for mobile remote control application.

Profile Buttons

- **Default** - load the default values for the current feature.
- **Apply** - apply your changes.
- **Save** - store values in the file with individual file extension.
- **Load** - load the values from the file.

Important

*Every time you shut down the system, the configured setting will be restored to the factory default. If you want to use the saved settings, you have to load it every time by clicking the **Load** and **Apply** buttons.*

CPU Frequency

CPU Frequency control panel allows you to change CPU Ratio and Base clock. You can see the current frequency of each CPU core on the top of the panel.

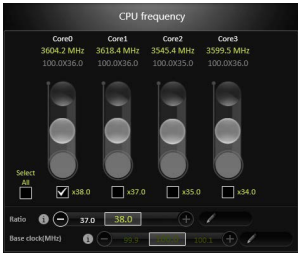

CPU Fan

CPU Fan control panel provides **Smart mode** and **Manual Mode**. You can switch the control mode by clicking the **Smart Mode** and **Manual Mode** buttons on the top of the CPU Fan control panel.

- **Manual Mode** - allows you to manually control the CPU fan speed by percentage.
- **Smart Mode** - a linear fan speed control feature. The control panel contains 4 dots allows you to drag and adjust the Smart Speed slopes. The fan speed will be changed along these lines with CPU temperature. The white dot will create strip chart in real time.
- **System Fan Button** - to open the system fan control panel in new window.
- **Fan Tune Button** - to automatically optimize the smart fan setting.

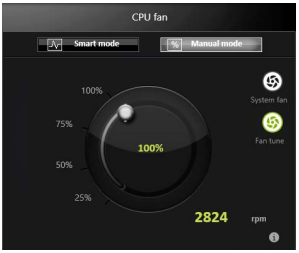

Manual Mode

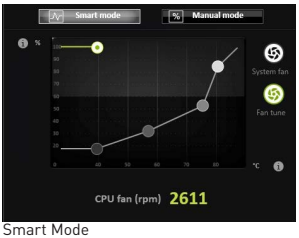

Smart Mode

CPU Voltage

CPU Voltage control panel allows you to control the CPU voltage.

DRAM Frequency & DRAM Voltage

- **DRAM Frequency** - Shows the DRAM clock, ratio and frequency.
- **DRAM Voltage** - Allows you to adjust the DRAM voltage. The risky values are displayed in red.

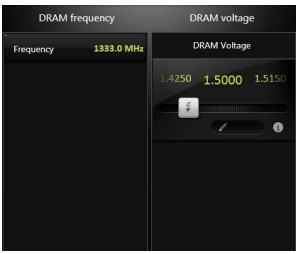

IGP Frequency & GT Voltage

- **IGP Frequency** - Allows you to adjust the IGP ratio, and shows the IGP clock, ratio and frequency.
- **GT Voltage** - Allows you to adjust the GT voltage. The risky values are displayed in red.

OC GENIE 4

OC GENIE 4 provides a specified CPU frequency for overclocking the CPU.

Option Buttons - Advanced

When click the **Advanced** button, The **Voltage**, **Fan** and **DRAM** icons will appear.

- **Voltage** - allows you to adjust advanced voltage values of CPU and chipset.
- **Fan** - allows you to control the system fans speed.
- **DRAM** - shows the current Advanced DRAM parameters, and allows you to change the settings by selecting values from the drop-down menu on the right hand side.
- **Sensor** - allows you to monitor your motherboard temperature and fan speed with the virtual thermal image. You can drag and drop the fan icons to new locations. When you press the **Cooling** button, all fans will run at full speed.

Option Buttons - Setting

When click the **Setting** button, The **Record**, **Warning** and **Mobile Control** icons will appear.

- **Record** - allows you to monitor the status of voltage, fan speed and temperature in real time.
  - To filter record charts, select the check box next to the items.
  - When click the **Play** button, the chart pane will start to show the recording chart. If you want to check the value of a specific spot on chart, please move the orange vertical line to the spot.
  - History Record stores the data and names with date and time.
  - To make a history record: Select items and click the **Record** button. When finished, click the **Record** button again. The data will be stored in the drop-down menu.
  - To load a record, click the drop-down menu and select one from the list.
  - To delete a record, select the record that you want to delete, and click the **Trash Can** icon.

• **Warning** - contains fields of voltage, fan speed and temperature for you to set the threshold values. When system detects the status over your settings, a warning message will pop-up.

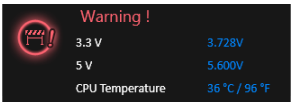

• **Mobile Control** - is only available for the motherboard with the built-in WiFi module. It allows you to enable/disable the COMMAND CENTER Remote Server. Please refer to the instruction on the Mobile Control control panel.

• **To start remote control: (optional)**

1. Download and install **MSI® COMMAND CENTER** APP to your mobile device.
2. Enable **COMMAND CENTER Remote Server** on the **Mobile Control** panel.
3. Enable **SoftAP Management**.
4. Enter **SSID** and **Password**, and then click the **Apply** button.
5. Activate Wi-Fi® on your mobile device and connect to SoftAP with the SSID.
6. Run **MSI® COMMAND CENTER** APP on your mobile device.
7. Find the IP address on the **SoftAP Management Setting** area, and enter the IP address on your **MSI® COMMAND CENTER** APP to link your system.
8. Press **Refresh** on the **MSI® COMMAND CENTER** APP to verify that monitoring and OC functions are working properly.

Option Buttons - Information

When click the **Information** button, The **Motherboard**, **CPU**, **Memory** and **HW monitor** icons will appear.

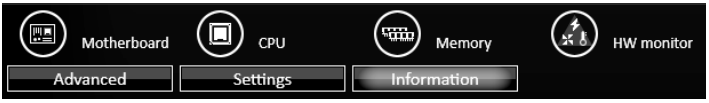

You can click the icons to open the related information.

Gadget Mode

COMMAND CENTER provides a gadget mode to monitor the system status. You can switch between gadget mode and full mode by clicking the arrow icon on the top left.

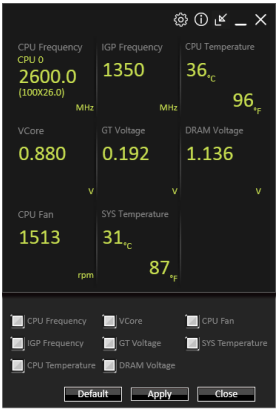

• **To arrange gadgets:**

1. Click the Spanner icon on the Gadget mode, a configuration panel will slide out.
2. Select the check box next to the items.
3. Click the **Close** button.

X-BOOST

The MSI **X-BOOST** allows you to select the system performance mode to meet your current system environment or support faster storage access speed for your external storage or memory cards.

Easy

In **Easy** page, you can select one system performance mode to meet the current system environment.

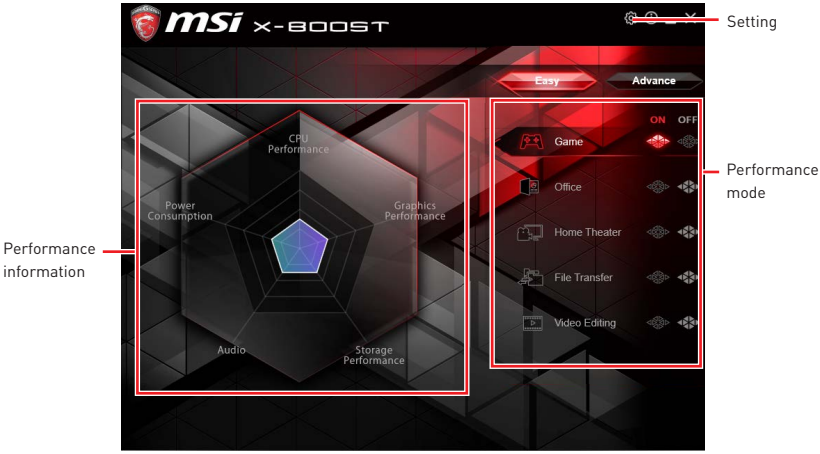

• **Performance mode** - moves over the mouse to any one of performance mode and click on the **ON** button to enable it.

Important

*The **Customize** mode is the default of system performance.*

• **Performance information** - displays the system performance diagram of enabled mode.

• **Setting** - enables or disables **Run X-BOOST when windows starts**.

Advance

In **Advance** page, you can enable the **USB SPEED UP,** the **STORAGE BOOST** and **VR BOOST**.

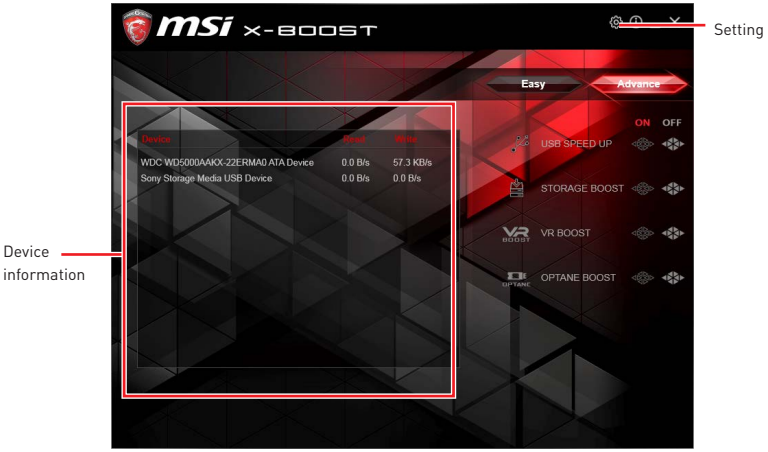

- **Device information** - displays the information and current transfer rates/ access speeds of USB/ storage devices.
- **Setting** - enables or disables **Run X-BOOST when windows starts**.
- **USB SPEED UP** - supports faster data transfer rates of the USB storage devices.
- **STORAGE BOOST** - supports faster access speed of storage device.
- **VR BOOST** - provides the optimized settings to boost the system for better VR experience.
- **OPTANE BOOST** - supports faster access speed of Intel Optane memory (require a reboot).

Important

- *Please note that you can only select one mode at a time from Easy or Advance page as MSI **X-BOOST** function.*
- *The improved transfer rate/ access speed will vary with the USB/ storage device.*

MYSTICLIGHT

MYSTICLIGHT is an application allows you to control LED lights of MSI products.

Main Screen

The Main screen is used to configure what devices need to be synchronized and LED light effect options.

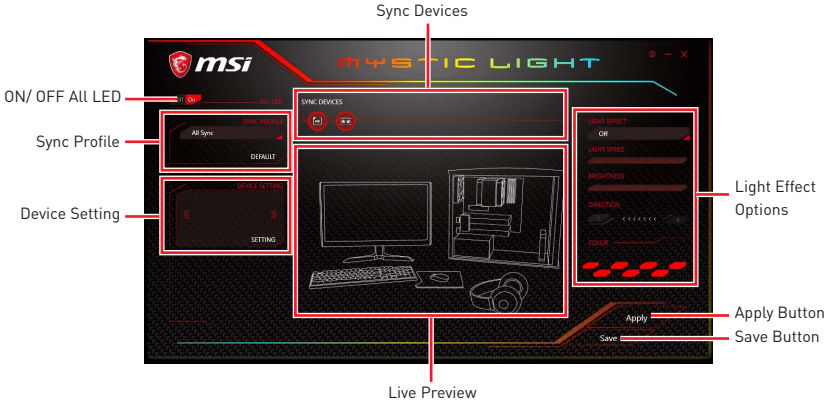

- **ON/OFF All LED** - allows you to turn ON/ OFF all LED lights of sync devices.
- **Sync Devices** - allows you to select devices to sync by clicking the device's icon on the Sync Device bar. The lighting effect of the sync devices will be controlled by the main screen.
- **Live Preview** - gives you the full experience of your configuration' s look, feel while you are editing it.
- **Light Effect Options** - allow you to customize lighting effect of the sync devices.
- **Apply Button** - applies lighting effect settings.
- **Sync Profile** - manages sets of sync device lighting effect settings.
  - **All Sync** - all devices are synchronized to the main lighting effect settings.
  - **Individual** - all devices lighting effects are applied to their respective settings.
  - **Profile01~03** - selected sync devices lighting effects are synchronized to the main lighting effect settings.
- **Save Button** - saves sync device settings and lighting effect settings to the current Sync Profile.
- **Device Setting** - switches to the other supported products.

Motherboard Screen

The motherboard screen is used to configure the LED light effect of the motherboard.

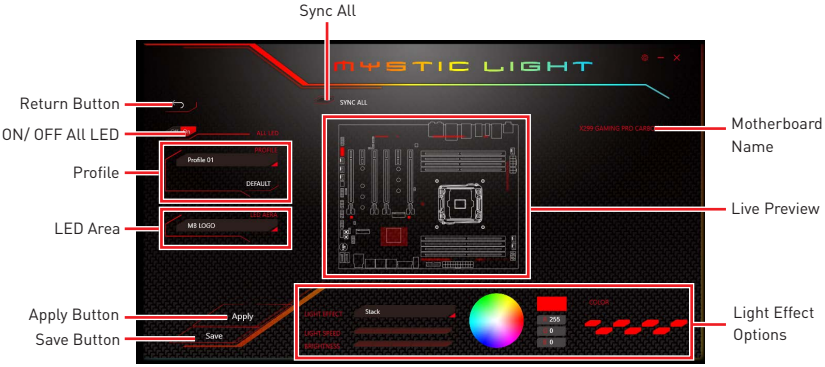

Note: *The motherboard picture and name may vary according to different models.*

- **Return Button** - returns to the main screen.
- **ON/OFF All LED** - allows you to turn ON/ OFF all LED lights of the motherboard.
- **Sync All** - allows you to synchronize all LED light effect of the motherboard.
- **Motherboard Name** - shows the name of the motherboard.
- **Live Preview** - gives you the full experience of your configuration' s look, feel while you are editing it.
- **Light Effect Options** - allow you to customize lighting effect of the sync devices.
- **Apply Button** - applies lighting effect settings.
- **Profile** - manages sets of motherboard LED light effect settings.
- **Save Button** - saves sync device settings and lighting effect settings to the current profile.
- **LED Area** - switches to the other LED area on the motherboard.

MSI SMART TOOL

MSI SMART TOOL is a convenient tool that can help you to create your Windows installation USB flash drive with USB 3.0 drivers, and it can also create a software RAID.

Main menu

After installing and activating MSI SMART TOOL, it will display a main menu for you to choose **Win7 Smart Tool** or **Software RAID**. Note that the Software RAID is only available when your system equipped with at least 3 hard-disk drives (1 system disk and 2 data disks).

WIN7 SMART TOOL

Before you can create your Windows installation USB flash drive, you' ll need to have your Windows Installation DVD or ISO file, and also have a minimum of a 8GB USB flash drive to create your installer. Be sure to backup files on the USB drive, this process will erase it.

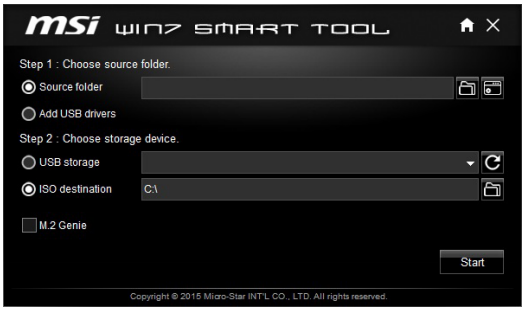

To create the Windows installation USB drive:

Step1. Choose source folder

• In the **Source folder** box, type the name and path of your Windows ISO file, or click **Browse** button and select the file from the dialog box. (This option will copy all Windows installation files and USB 3.0 drivers)

• If you already have the Windows Installation USB flash drive and just want to add USB 3.0 drivers on it, you can choose **Add USB drivers.**

Step2. Choose Storage device

• Choose **USB storage** and select your USB flash drive in the drop-down list. In case the USB flash drive is not listed, click the **Refresh Drive** button.

• If you want to install Windows on the PCIe M.2 RAID that was created by **BIOS > M.2 Genie** (please refer to BIOS Setup Section for details), check the **M.2 Genie** checkbox to copy iRST drivers to the USB flash drive.

• Click **Start**.

Important

*You can also create an installer ISO image file by selecting the **ISO destination** in Step2, and then burn it onto the DVD. However, this method does not support **M.2 Genie**.*

SOFTWARE RAID

This utility allows you to create a software RAID in Windows system.

To create a software RAID:

1. Use checkboxs to select the disks you want included in your RAID.
2. Choose **Speed Up** or **Backup** for RAID type.
   - Speed Up = RAID0
   - Backup = RAID1
3. Click **Start**.
4. When prompt **Finish!,** click **OK**.

Important

Software RAID can't includ the system disk.

RAMDISK

RAMDISK creates a virtual RAM drive using the available memory in your computer, the performance of the RAMDISK is faster than an SSD and hard drive. RAMDISK allows you to store any temporary information on it. Furthermore, using the RAMDISK will extend your SSD' s life by sparing it from excessive reading and writing.

Creating a RAM Disk

When **RAMDISK** is started, it will create a default RAM disk. If you want to change settings, refer to following instructions.

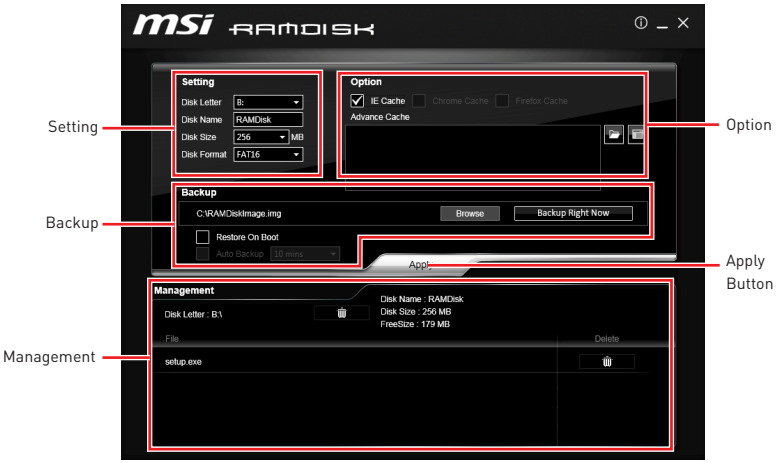

- **Setting** - specify **Letter**, **Name**, **Size** and **Format** of the RAM disk.
- **Option** - select browser temporary files to save/load on the RAM disk. You can also add software files to improve reading speed.
- **Backup** - specify backup and restore settings to prevent data loss. All files will be lost each time the RAMDISK is stopped if you do not backup.
  - **Browse Button** - set the path to the image file.
  - **Backup Right Now Button** - manually backup files.
  - **Restore On Boot** - check this box to have the image file loaded automatically when RAMDISK starts.
  - **Auto Backup** - check this box to backup automatically over a period of time.
- **Apply Button** - allows you to apply changes.
- **Management** - shows RAMDISK information and allows you to delete files.

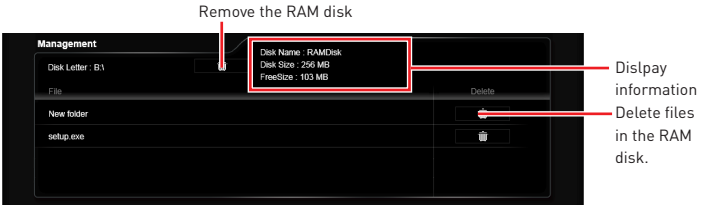

NETWORK MANAGER

NETWORK MANAGER is an utility for traffic shaping for the Windows 10. It can keep your internet fast during heavy upload/ download and improve your ping for online games. If your motherboard has a Wi-Fi module, NETWORK MANAGER provides virtual access point function for traffic shaping for your mobile devices.

- **Applications** - displays currently using network bandwidth applications. You can prioritize Games, Medias or File sharing programs as high as possible.
- **Performance** - shows top 5 applications by total traffic, allows you to monitor network bandwidth usage.
- **Network Test** - allows you to setup bandwidth control.
- **Advanced Setting** - allows you to expand RWIN to accelerate download speed. You can also block IP address and setup virtual access point.
- **Information** - shows version information.

Configuring Bandwidth

This section describes how to configure Internet Provider Speed. You can configure default internet upload and download bandwidth from the Network Test tab on the NETWORK MANAGER window.

Important

*Before using the NETWORK MANAGER for the first time, you should use the **Test Network Speed** button which runs a speed test of your current total Internet bandwidth delivered through your Internet service provider.*

Speed Testing

The speed testing is used to optimize bandwidth usage. To test the Upload and Download speed, please follow the steps below:

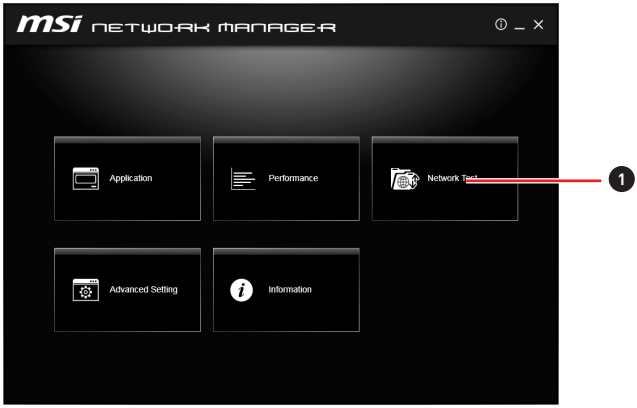

1. Click the **Network Test** block in NETWORK MANAGER.

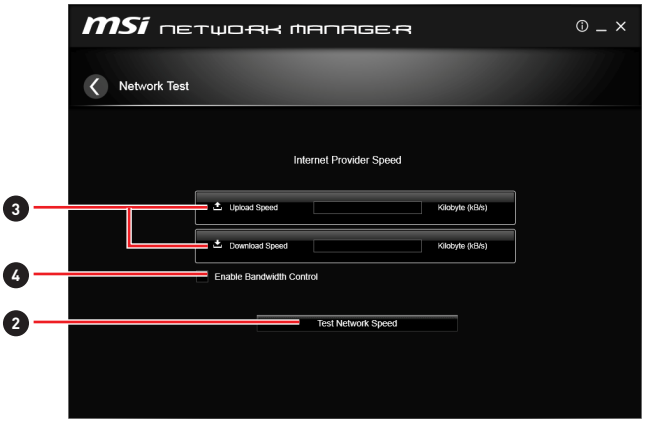

2. Click **Test Network Speed** button. The test takes several minutes to test your network speed.
3. Enter the testing results into **Upload Speed** and **Download Speed** fields.
4. Check the **Enable Bandwidth Control** to allow the NETWORK MANAGER to manage the bandwidth.

Intel® Extreme Tuning Utility

Intel® Extreme Tuning Utility (Intel XTU) is a simple overclocking software for you to tune, test and monitor your system.

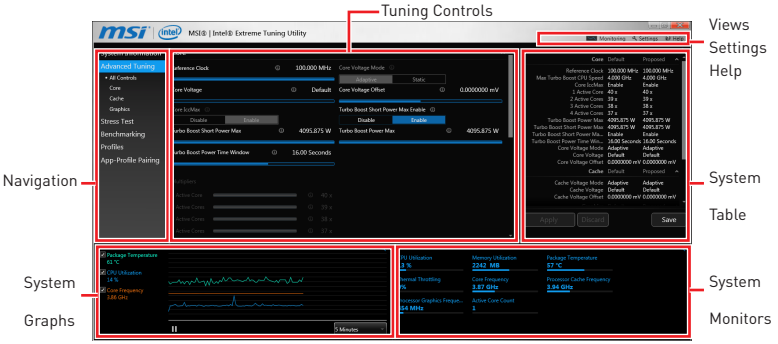

- **Views Settings Help**

  - **Views** - toggles to switche between **Monitoring** and **Show All** view.
  - **Settings** - opens the **General Settings** window.
  - **Help** - displays the help content for Intel XTU in a separate window.

- **Navigation** - lists all of the major functions of Intel XTU.
  - **System Information** - shows the details about your system.
  - **App-Profile Pairing** - tunes automatically based on active application.
  - **Manual Tuning** - changes system settings in a free form.
  - **Stress Test** - tests the stability of your system.
  - **Benchmarking** - analyzes and compares your system's performance against other system profiles.
  - **Profiles** - manages sets of system settings.

- **Tuning Controls** - displays the controls for changing the system settings in manual tuning. For stress tests and profiles, this area displays the settings for these features.

- **System Table** - displays information about the current system settings and a summary of your changes.

- **System Graphs** - shows measured system values over a period of time. The system graphs update live as changes are detected in the system. You can customize the system graphs to show the data you need for your overclocking strategy in the system graphs preferences.

- **System Monitors** - shows the range of the value, averages, and the current value. The monitors change color if the monitored values fall into warning or critical zones.

CPU-Z

CPU-Z is an utility that gathers information on some of the main devices of your system.

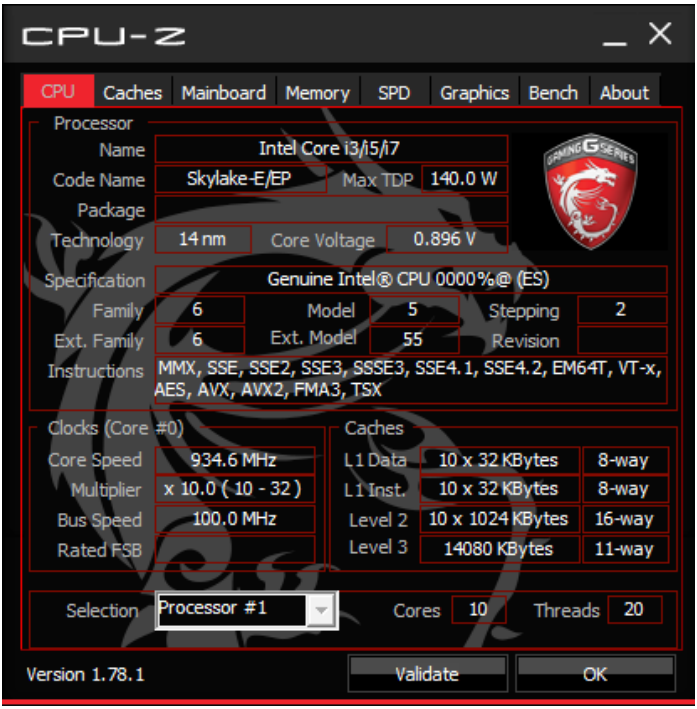

- **CPU Tab** - shows processor name, code name, package, specification, instructions sets, core speed and cache levels.
- **Caches Tab** - shows extended information related to the cache capabilities.
- **Mainboard Tab** - shows motherboard manufacturer, model name, chipset, BIOS version and graphic interface.
- **Memory Tab** - shows memory type, memory size, channels, memory frequency.
- **SPD Tab** - shows specifications relating to each memory module connected to the motherboard, including the size, type and frequency.
- **Graphics Tab** - shows GPU name, code name, core speed, memory size, and memory type.
- **Bench Tab** - allows you to run either a benchmark or a stress test on your processor.
- **About Tab** - shows the CPU-Z version, Windows version, DirectX version and allows you to save the report file.

RAID Configuration

Below are the different types of a RAID.

RAID 0 breaks the data into blocks which are written to separate hard drives. Spreading the hard drive I/O load across independent channels greatly improves I/O performance.

RAID 1 provides data redundancy by mirroring data between the hard drives and provides enhanced read performance.

RAID 5 provides data striping at the byte level and also stripe error correction information. This results in excellent performance and good fault tolerance.

RAID 10 uses four hard drives to create a combination of RAID 0 and 1 by forming a RAID 0 array from two RAID 1 arrays.

RAID level comparison

	RAID 0	RAID 1	RAID 5	RAID 10
Minimum # drives	2	2	3	4
Data protection	None	Excellent	Excellent	Excellent
Read performance	Excellent	OK	Good	OK
Write performance	Excellent	Good	OK	Good
Capacity utilization	100%	50%	67%~(1-1/n)	50%

Using Intel® Rapid Storage Technology Option ROM

First, you need to set the **SATA mode** to **RAID** in BIOS to create, delete and reset RAID volumes. To enter the IRST Option ROM, reboot and press **Ctrl + I** keys to enter the IRST Option ROM during the POST, the following window will appear.

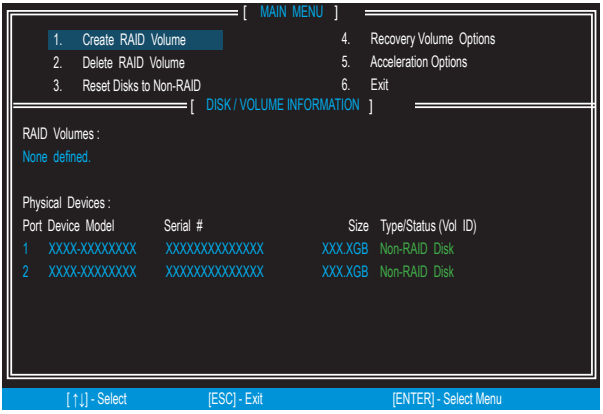

Important

The following procedure is only available with a newly-built system or if you are reinstalling your OS. It should not be used to migrate an existing system to RAID.

Creating s RAID Volume

1. Select option **Create RAID Volume** and press **Enter** key. The following screen appears.

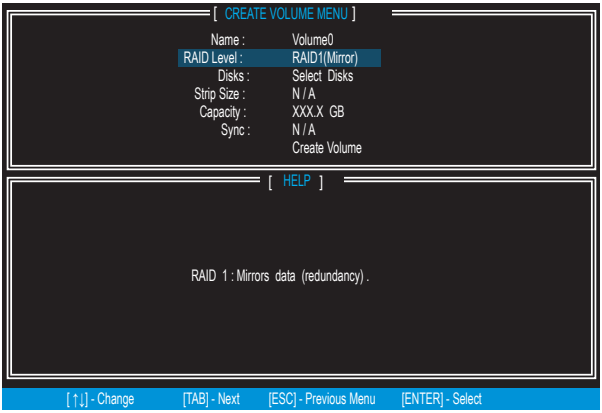

2. Specify a RAID Volume name and then press the **Tab** or **Enter** key to go to the next field

3. Use the ↑ ↓ ←→ **arrow keys** to select the RAID level best suited to your usage model in RAID Level.

4. In the Disk field, press **Enter** key and use **Space** key to select the disks you want to create for the RAID volume, then click **Enter** key to finish selection. This field will become available according to the selected RAID level.

5. Select the strip size for the RAID array by using the ↑ **upper arrow** or ↓ **down arrow** keys to scroll through the available values, and pressing the **Enter** key to select and advance to the next field. The available values range from 4KB to 128 KB in power of 2 increments. The strip size should be chosen based on the planned drive usage. Here are some typical values:
RAID0 -128KB / RAID10 - 64KB / RAID5 - 64KB.

6. Select the capacity of the volume in the **Capacity** field. The default value is the maximum volume capacity of the selected disks.

Important

Since you want to create two volumes, this default size (maximum) needs to be reduced. Type in a new size for the first volume. As an example: if you want the first volume to span the first half of the two disks, re-type the size to be half of what is shown by default. The second volume, when created, will automatically span the remainder of two hard drives.

7. Go to the **Create Volume** field and press **Enter**, a WARNING message will appear for you to confirm if you are sure to create the RAID volume. Press **Y** to continue.

Removing a RAID Volume

Here you can delete the RAID volume, but please be noted that all data on RAID drives will be lost.

Important

If your system currently boots to RAID and you delete the RAID volume in the IRST Option ROM, your system will become unbootable.

Select option **Delete RAID Volume** from the main menu screen and press **Enter** key to select a RAID volume for deletion. Then press **Delete** key to delete the selected RAID volume. The following screen appears.

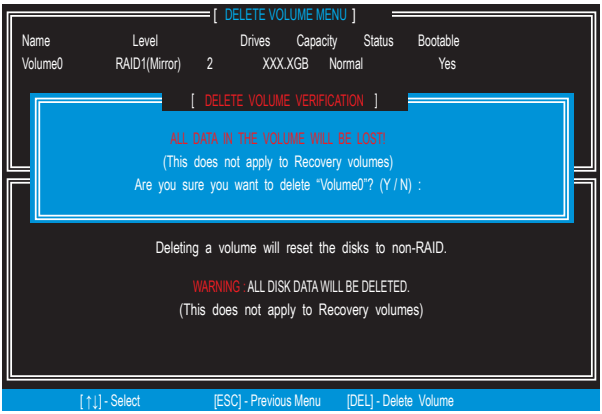

Press **Y** key to accept the volume deletion.

Resetting Disks to Non-RAID

Select option **Reset Disks to Non-RAID** from the main menu screen and press **Enter** to delete the RAID volume and remove any RAID structures from the drives. Use the **Space** key to select the disks and press **Enter** key. A confirmation sentence will appear below, and then press **Y** key to accept the selection

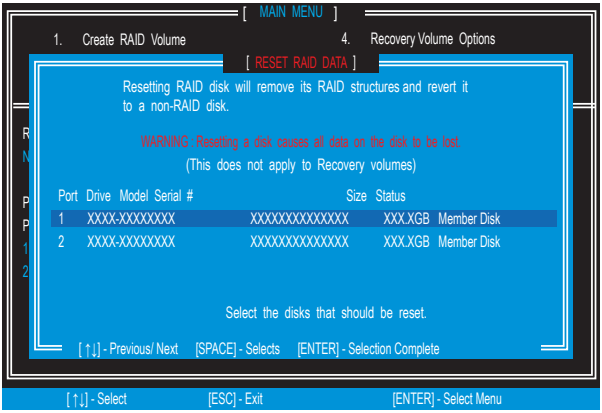

Important

- *You will lose all data on the RAID drives and any internal RAID structures when you perform this operation.*
- *Possible reasons to **Reset Disks to Non-RAID** could include issues such as incompatible RAID configurations or a failed volume or failed disk.*

Recovery Volume Options

Select option **Recovery Volume Options** from the main menu screen and press **Enter** to change recovery volume mode. The following screen appears:

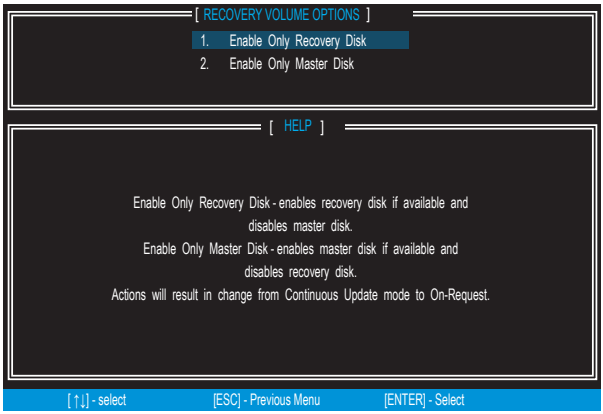

Recovery mode will change from Continuous Update to On-Request after you enable **Only Recovery Disk** or **Only Master Disk**.

Degraded RAID Array

A RAID 1, RAID 5 or RAID 10 volume is reported as degraded when one of its hard drive members fails or is temporarily disconnected, and data mirroring is lost. As a result, the system can only utilize the remaining functional hard drive member. To re-establish data mirroring and restore data redundancy, refer to the procedure below that corresponds to the current situation.

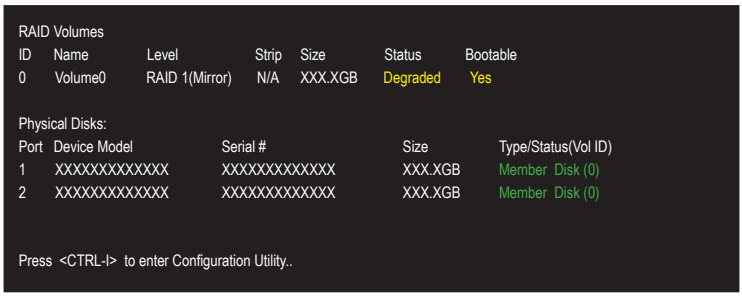

Missing Hard Drive Member

1. Power off.

2. Reconnect the hard drive.
3. Reboot to Windows®; the rebuild will occur automatically.

Failed Hard Drive Member

1. Power off.
2. Replace the failed hard drive with a new one that is of equal or greater capacity.
3. Reboot the system to IRST Option ROM by press **Ctrl + I** keys during the POST.
4. Select the port of the destination disk for rebuilding, and then press **Enter**.

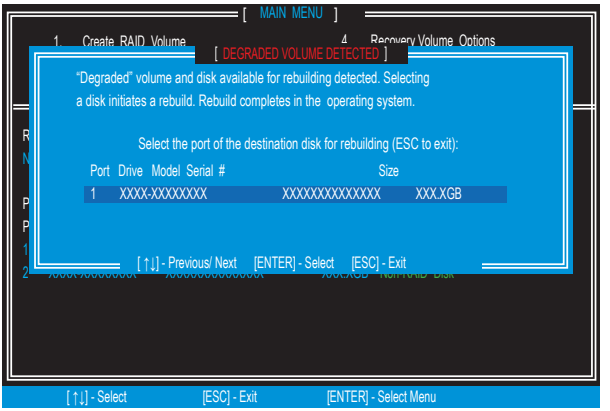

5. Exit IRST Option ROM, reboot to Windows®.
6. When prompted to rebuild the RAID volume, click **Yes**.
7. The **Intel® Rapid Storage Technology** application will be launched. Right-click the new hard drive and select **Rebuild to this Disk**. The **Rebuild Wizard** will be launched which will guide you through the process of rebuilding to the new hard drive.

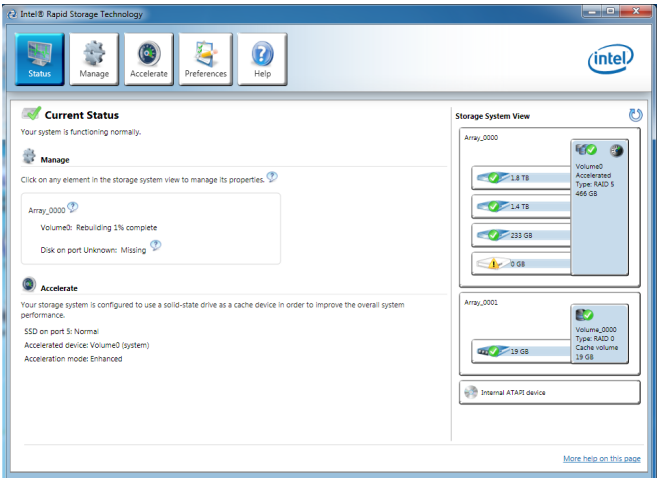

M.2 PCIe SSD RAID

You can create a M.2 PCIe SSD RAID volume with M.2/Optane Genie or UEFI BIOS.

Important

- *Please note that you must install M.2 SSDs of the **same model** and **type** in the M.2 slots to create the RAID 0 volume.*
- *During windows setup, the RAID driver may be required and you can find the RAID driver in MSI Driver Disc.*
- *You can use **MSI SMART TOOL** to build the Windows® 7/ 8.1/ 10 installation drive that includes RAID driver.*
- *If your system currently boots to M.2 PCIe SSD RAID and you delete the RAID volume, your system will become unbootable.*
- *When you delete the M.2 PCIe SSD RAID volume, please be noted that all data on M.2 PCIe SSDs will be lost.*

Creating a M.2 PCIe SSD RAID with M.2/Optane Genie

1. Access the BIOS setup.
2. Enable M.2/Optane Genie by clicking the **M.2/Optane Genie** item.
3. Click **Ok** in the dialog.
4. Press **F10** to save configuration and exit.

Creating a M.2 PCIe SSD RAID with UEFI BIOS

1. Access the BIOS setup
2. Switch to **Advanced Mode** by pressing **F7** key.
3. Go to **Settings > Advanced > Windows OS Configuration.**
4. Set **Windows 8.1/10 WHQL Support** to **Enabled**.
5. Go to **Settings > Advanced > Integrated Peripherals.**

6. Set **SATA Mode** to **RAID Mode**.
7. Set both **M2_1 Pcie Storage Remapping** and **M2_2 Pcie Storage Remapping** to **Enabled.**
8. Press **F10** to save and exit and then press the **Enter** key to select **Yes**.
9. Reboot the system and access the BIOS setup again.
10. Switch to **Advanced Mode** by pressing **F7** key.
11. Go to **Settings > Advanced > Intel(R) Rapid Storage Technology.**

12. Select **Create RAID Volume** and press **Enter** key.

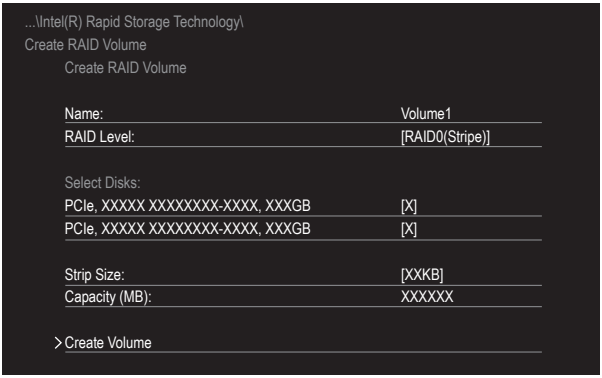

13. Enter in a volume name.
14. Select the RAID level.
15. Use **Space** key to select the both PCIe SSDs.
16. If creating RAID 0, select the Strip Size; it is recommended that it be left at the default value.
17. Go to the **Create Volume** field and press **Enter**.

Removing a M.2 PCIe SSD RAID Volume with M.2/Optane Genie

1. Access the BIOS setup.
2. Disable M.2/Optane Genie by clicking **M.2/Optane Genie** item.
3. Click **Ok** in the dialog.
4. Press **F10** to save configuration and exit.

Removing a M.2 PCIe SSD RAID Volume with UEFI BIOS

1. Access the BIOS setup.
2. Switch to **Advanced Mode** by pressing **F7** key.
3. Go to **Settings > Advanced > Intel(R) Rapid Storage Technology.**
4. Select a RAID volume and press **Enter** key.
5. Go to the **Delete** field and press **Enter**. The following screen appears

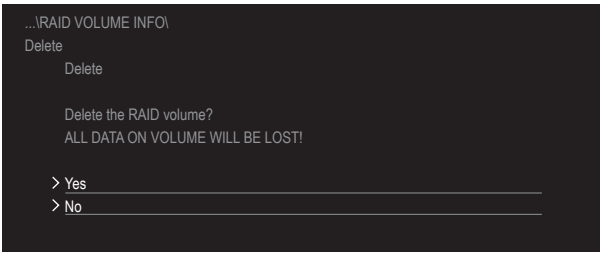

6. Go to the **Yes** field and press **Enter** key to accept the volume deletion.

Intel® Optane™ Memory Configuration

Intel® Optane™ memory can accelerate the Windows 10 64bit operating system. This section describes how to install and remove the Intel® Optane™ memory.

System Requirements

- Intel® Optane™ memory ready MSI® motherboards
- Supported 7th Gen, or later, Intel® Core™ - i Processor
- System BIOS that supports the Intel® Rapid Storage Technology (Intel® RST) 15.5 or later driver
- Operating system: Windows 10 64 bit (UEFI mode).
- Intel® Optane™ Memory Module

Installing the Intel® Optane™ memory

The Intel® Optane™ memory is pre-installed on this motherboard, just skip to step 4:

Install the Intel® Rapid Storage Technology 15.5.

1. Update BIOS (refer to the **Updating BIOS** section).
2. Install the Intel® Optane™ memory module.
   - Power off the system.
   - Refer to the **Specifications** for location to install your Intel® Optane™ memory module.
   - Install the Intel® Optane™ memory module into the M.2 slot.
3. Enable M.2/Optane Genie
   - Power on and press **Delete** key to enter BIOS Setup menu.
   - Enable M.2/Optane Genie by clicking the **M.2/Optane Genie** item.
   - Click **Ok** in the dialog.
   - Press **F10** to save configuration and exit.
4. Install the Intel® Rapid Storage Technology 15.5
   - Reboot to operating system.
   - Install the Intel® Rapid Storage Technology 15.5
   - Reboot System.

5. Enable Intel® Optane™ Memory.

- Enable Intel® Optane™ Memory via the Intel® Optane™ memory application (auto-launches upon reboot).
- Click **Yes** in the dialog.

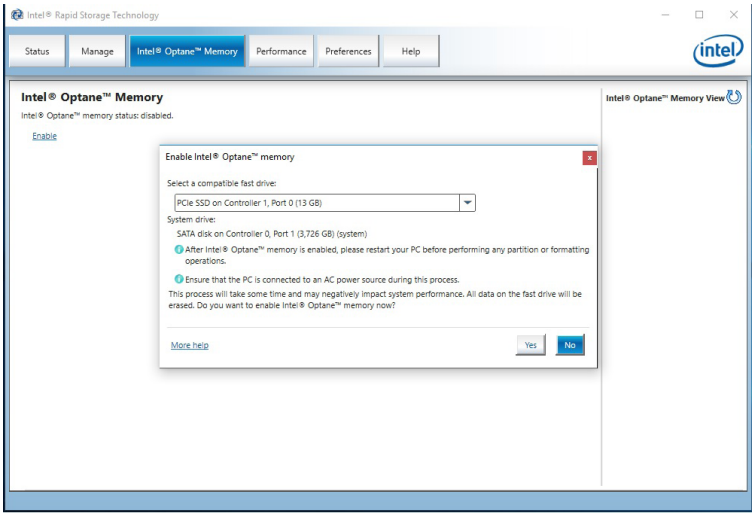

- Reboot System.

WARNING

Once you enable Intel® Optane™ memory, in order to prevent seriously damage your operating system, please follow the cautions listed below.

- ***DO NOT set the SATA mode back to AHCI in BIOS.***
- ***DO NOT revert back to older version of the BIOS.***
- ***DO NOT remove the Intel® Optane™ memory module.***
- ***DO NOT replace the CPU that is not supported by Intel® Optane™ Memory.***

Removing the Intel® Optane™ memory

If you no longer want to use Intel® Optane™ memory, you have to disable the Intel® Optane™ memory before removing the Intel® Optane™ memory module to avoid operating system damage. Please follow the steps below to remove the Intel® Optane™ memory.

1. Disable Intel® Optane™ Memory.
   - Disable Intel® Optane™ Memory via the Intel® Optane™ memory application (Intel® Rapid Storage Technology).
   - Click **Yes** in the dialog.

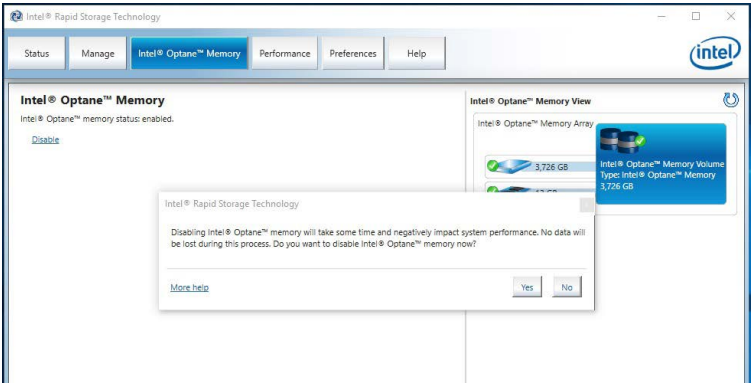

   - Reboot System.

2. Disable M.2/Optane Genie
   - Press **Delete** key to enter BIOS Setup menu during POST.
   - Disable M.2/Optane Genie by clicking **M.2/Optane Genie** item.
   - Click **Ok** in the dialog.
   - Press **F10** to save configuration and exit.
3. Remove the Intel® Optane™ memory module.
   - Power off the system.
   - Remove the Intel® Optane™ memory module.

Troubleshooting

When you installed the operating system in AHCI mode, the system will be changed to RAID/ Optane mode after enabling Intel® Optane™ Memory. If you want to disable Intel Optane Memory and switch BIOS setting from RAID/ Optane mode back to AHCI mode, that may cause operating system damage. MSI has developed a software assistance for this problem. You can disable Intel® Optane™ Memory and switch back to AHCI mode while keep the system bootable with MSI SMART TOOL.

Please follow the steps below to disable Intel® Optane™ Memory and set the SATA mode back to AHCI.

1. Run MSI SMART TOOL.

2. Click the **OPTANE** icon. (Note: the OPTANE icon is only available when Intel® Optane™ Memory has been enabled)
3. Click **Yes**.

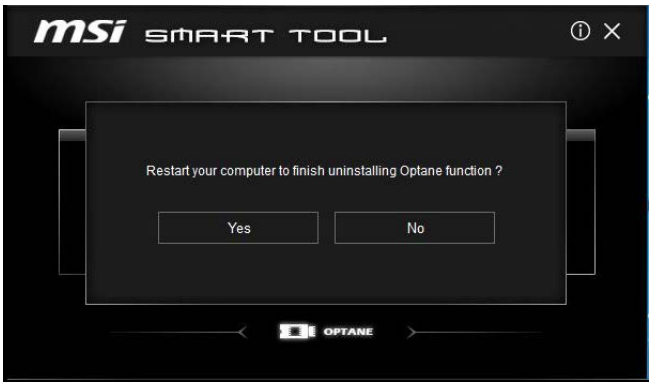

4. Reboot System.

Troubleshooting

Before sending the motherboard for RMA repair, try to go over troubleshooting guide first to see if your got similar symptoms as mentioned below.

The power is not on.

- Connect the AC power cord to an electrical outlet securely.
- Check if all ATX power connectors like **ATX_PWR1, CPU_PWR1** are connected from the power supply to the motherboard?
- Some power supply units have a power button on the rear side, make sure the button is turned on.
- Check if the power switch cable is connected to **JFP1** pin header properly.
- Verify the **Clear CMOS** jumper **JBAT1** is set to **Keep DATA**.
- Test with another known working power supply of equal or greater wattage.

The power is on, but no signal to monitor

- Connect the monitor power cord to a electrical outlet securely.
- Make sure the monitor is turned on.
- Select different inputs on the monitor.
- If 3 long beeps are heard, remove all memory modules and try to install only one memory module in the **DIMMC1** slot first and then restart the computer.
- If 1 long 2 short beeps are heard, remove and reinstall the graphics card and then restart the computer.
- Test with another known working graphics card.

The computer does not boot after updating the BIOS

- Clear the CMOS.
- Use the secondary BIOS to bootup the system (Only for motherboard with Dual BIOS)

Lost BIOS password

- Clear the CMOS, but that will cause you to lose all customized settings in the BIOS.

There is no audio

- Adjust the volume.
- Connect the speakers/headphones to audio ports on the motherboard rear IO panel.
- Remove secondary speakers/ headphones, HDMI cables, USB audio devices.
- Test with another known working speaker or headphone.

There is no network

- Make sure the network chipset driver has been installed.
- Verify if the network cable is properly connected and make sure the LAN port LEDs are properly illuminated.
- Verify your TCP/IP settings.
- Restart or reset your router.
- Test with another known working LAN cable.

The USB device is not working

- Make sure your USB drive driver has been installed.
- Verify if USB device is listed in Windows® Device Manager.
- Connect the USB device to other USB port on the motherboard rear IO panel.

Regulatory Notices

FCC Compliance Statement

Note: This equipment has been tested and found to comply with the limits for a Class B digital device, pursuant to part 15 of the FCC Rules. These limits are designed to provide reasonable protection against harmful interference in a residential installation. This equipment generates, uses and can radiate radio frequency energy and, if not installed and used in accordance with the instructions, may cause harmful interference to radio communications. However, there is no guarantee that interference will not occur in a particular installation. If this equipment does cause harmful interference to radio or television reception, which can be determined by turning the equipment off and on, the user is encouraged to try to correct the interference by one or more of the following measures:

- Reorient or relocate the receiving antenna.
- Increase the separation between the equipment and receiver.
- Connect the equipment into an outlet on a circuit different from that to which the receiver is connected.
- Consult the dealer or an experienced radio/TV technician for help.

Caution: Changes or modifications not expressly approved by the party responsible for compliance could void the user' s authority to operate the equipment.

Tested to comply with FCC standards
FOR HOME OR OFFICE USE

This device complies with part 15 of the FCC Rules. Operation is subject to the following two conditions:
(1) This device may not cause harmful interference, and
(2) this device must accept any interference received, including interference that may cause undesired operation.

CE Conformity

Products bearing the CE marking comply with one or more of the following EU Directives as may be applicable:
RED 2014/53/EU; Low Voltage Directive 2014/35/EU; EMC Directive 2014/30/EU; RoHS Directive 2011/65/EU. Compliance with these directives is assessed using applicable European Harmonized Standards.
The point of contact for regulatory matters is MSI, MSI-NL Eindhoven 5706 5692 ER Son.

B급 기기 (가정용 방송통신기자재)

이 기기는 가정용(B급) 전자파적합기기로서 주로 가정에서 사용하는 것을 목적으로 하며, 모든 지역에서 사용할 수 있습니다.

クラスB情報技術装置

この装置は、クラスB情報技術装置です。この装置は、家庭環境で使用することを目的としていますが、この装置がラジオやテレビジョン受信機に近接して使用されると、受信障害を引き起こすことがあります。取扱説明書に従って
正しい取り扱いをして下さい

VCCI-B

C-Tick Compliance

N1996

Battery Information

European Union:
Batteries, battery packs, and accumulators should not be disposed of as unsorted household waste. Please use the public collection system to return, recycle, or treat them in compliance with the local regulations.

Taiwan:
廢電池請回收
For better environmental protection, waste batteries should be collected separately for recycling or special disposal.

California, USA:
The button cell battery may contain perchlorate material and requires special handling when recycled or disposed of in California.
For further information please visit:
http://www.dtsc.ca.gov/hazardouswaste/perchlorate/

CAUTION: There is a risk of explosion, if battery is incorrectly replaced.
Replace only with the same or equivalent type recommended by the manufacturer.

Chemical Substances Information

In compliance with chemical substances regulations, such as the EU REACH Regulation (Regulation EC No. 1907/2006 of the European Parliament and the Council), MSI provides the information of chemical substances in products at:
http://www.msi.com/html/popup/csr/evmtprtt_pcm.html

Environmental Policy

- The product has been designed to enable proper reuse of parts and recycling and should not be thrown away at its end of life.
- Users should contact the local authorized point of collection for recycling and disposing of their end-of-life products.
- Visit the MSI website and locate a nearby distributor for further recycling information.
- Users may also reach us at gpcontdev@msi.com for information regarding proper Disposal, Take-back, Recycling, and Disassembly of MSI products.

WEEE (Waste Electrical and Electronic Equipment) Statement

ENGLISH
To protect the global environment and as an environmentalist, MSI must remind you that...
Under the European Union ("EU") Directive on Waste Electrical and Electronic Equipment, Directive 2002/96/EC, which takes effect on August 13, 2005, products of "electrical and electronic equipment" cannot

be discarded as municipal wastes anymore, and manufacturers of covered electronic equipment will be obligated to take back such products at the end of their useful life. MSI will comply with the product take back requirements at the end of life of MSI-branded products that are sold into the EU. You can return these products to local collection points.

DEUTSCH
Hinweis von MSI zur Erhaltung und Schutz unserer Umwelt
Gemäß der Richtlinie 2002/96/EG über Elektro- und Elektronik-Altgeräte dürfen Elektro- und Elektronik-Altgeräte nicht mehr als kommunale Abfälle entsorgt werden. MSI hat europaweit verschiedene Sammel- und Recyclingunternehmen beauftragt, die in die Europäische Union in Verkehr gebrachten Produkte, am Ende seines Lebenszyklus zurückzunehmen. Bitte entsorgen Sie dieses Produkt zum gegebenen Zeitpunkt ausschliesslich an einer lokalen Altgerätesammelstelle in Ihrer Nähe.

FRANÇAIS
En tant qu'écologiste et afin de protéger l'environnement, MSI tient à rappeler ceci...
Au sujet de la directive européenne (EU) relative aux déchets des équipement électriques et électroniques, directive 2002/96/EC, prenant effet le 13 août 2005, que les produits électriques et électroniques ne peuvent être déposés dans les décharges ou tout simplement mis à la poubelle. Les fabricants de ces équipements seront obligés de récupérer certains produits en fin de vie. MSI prendra en compte cette exigence relative au retour des produits en fin de vie au sein de la communauté européenne. Par conséquent vous pouvez retourner localement ces matériels dans les points de collecte.

РУССКИЙ
Компания MSI предпринимает активные действия по защите окружающей среды, поэтому напоминаем вам, что....
В соответствии с директивой Европейского Союза (ЕС) по предотвращению загрязнения окружающей среды использованным электрическим и электронным оборудованием (директива WEEE 2002/96/EC), вступающей в силу 13 августа 2005 года, изделия, относящиеся к электрическому и электронному оборудованию, не могут рассматриваться как бытовой мусор, поэтому производители вышеперечисленного электронного оборудования обязаны принимать его для переработки по окончании срока службы. MSI обязуется соблюдать требования по приему продукции, проданной под маркой MSI на территории ЕС, в переработку по окончании срока службы. Вы можете вернуть эти изделия в специализированные пункты приема.

ESPAÑOL
MSI como empresa comprometida con la protección del medio ambiente, recomienda:
Bajo la directiva 2002/96/EC de la Unión Europea en materia de desechos y/o equipos electrónicos, con fecha de rigor desde el 13 de agosto de 2005, los productos clasificados como "eléctricos y equipos electrónicos" no pueden ser depositados en los contenedores habituales de su municipio, los fabricantes de equipos electrónicos, están obligados a hacerse cargo de dichos productos al termino de su período de vida. MSI estará comprometido con los términos de recogida de sus productos vendidos en la Unión Europea al final de su periodo de vida. Usted debe depositar estos productos en el punto limpio establecido por el ayuntamiento de su localidad o entregar a una empresa autorizada para la recogida de estos residuos.

NEDERLANDS
Om het milieu te beschermen, wil MSI u eraan herinneren dat....
De richtlijn van de Europese Unie (EU) met betrekking tot Vervuiling van Electrische en Electronische producten (2002/96/EC), die op 13 Augustus 2005 in zal gaan kunnen niet meer beschouwd worden als vervuiling. Fabrikanten van dit soort producten worden verplicht om producten retour te nemen aan het eind van hun levenscyclus. MSI zal overeenkomstig de richtlijn handelen voor de producten die de merknaam MSI dragen en verkocht zijn in de EU. Deze goederen kunnen geretourneerd worden op lokale inzamelingspunten.

SRPSKI
Da bi zaštitili prirodnu sredinu, i kao preduzeće koje vodi računa o okolini i prirodnoj sredini, MSI mora da vas podesti da...
Po Direktivi Evropske unije ("EU") o odbačenoj ekektronskoj i električnoj opremi, Direktiva 2002/96/EC, koja stupa na snagu od 13. Avgusta 2005, proizvodi koji spadaju pod "elektronsku i električnu opremu" ne mogu više biti odbačeni kao običan otpad i proizvođači ove opreme biće prinuđeni da uzmu natrag ove proizvode na kraju njihovog uobičajenog veka trajanja. MSI će poštovati zahtev o preuzimanju ovakvih proizvoda kojima je istekao vek trajanja, koji imaju MSI oznaku i koji su prodati u EU. Ove proizvode možete vratiti na lokalnim mestima za prikupljanje.

POLSKI
Aby chronić nasze środowisko naturalne oraz jako firma dbająca o ekologię, MSI przypomina, że...
Zgodnie z Dyrektywą Unii Europejskiej ("UE") dotyczącą odpadów produktów elektrycznych i elektronicznych (Dyrektywa 2002/96/EC), która wchodzi w życie 13 sierpnia 2005, tzw. "produkty oraz wyposażenie elektryczne i elektroniczne " nie mogą być traktowane jako śmieci komunalne, tak więc producenci tych produktów będą zobowiązani do odbierania ich w momencie gdy produkt jest wycofywany z użycia. MSI wypełni wymagania UE, przyjmując produkty (sprzedawane na terenie Unii Europejskiej) wycofywane z użycia. Produkty MSI będzie można zwracać w wyznaczonych punktach zbiorczych.

TÜRKÇE
Çevreci özelliğiyle bilinen MSI dünyada çevreyi korumak için hatırlatır:
Avrupa Birliği (AB) Kararnamesi Elektrik ve Elektronik Malzeme Atığı, 2002/96/EC Kararnamesi altında 13 Ağustos 2005 tarihinden itibaren geçerli olmak üzere, elektrikli ve elektronik malzemeler diğer atıklar gibi çöpe atılamayacak ve bu elektonik cihazların üreticileri, cihazların kullanım süreleri bittikten sonra ürünleri geri toplamakla yükümlü olacaktır. Avrupa Birliği'ne satılan MSI markalı ürünlerin kullanım süreleri bittiğinde MSI ürünlerin geri alınması isteği ile işbirliği içerisinde olacaktır. Ürünlerinizi yerel toplama noktalarına bırakabilirsiniz.

ČESKY
Záleží nám na ochraně životního prostředí - společnost MSI upozorňuje...
Podle směrnice Evropské unie ("EU") o likvidaci elektrických a elektronických výrobků 2002/96/

EC platné od 13. srpna 2005 je zakázáno likvidovat "elektrické a elektronické výrobky" v běžném komunálním odpadu a výrobci elektronických výrobků, na které se tato směrnice vztahuje, budou povinni odebírat takové výrobky zpět po skončení jejich životnosti. Společnost MSI splní požadavky na odebírání výrobků značky MSI, prodávaných v zemích EU, po skončení jejich životnosti. Tyto výrobky můžete odevzdat v místních sběrnách.

MAGYAR
Annak érdekében, hogy környezetünket megvédjük, illetve környezetvédőként fellépve az MSI emlékezteti Önt, hogy ...
Az Európai Unió („EU") 2005. augusztus 13-án hatályba lépő, az elektromos és elektronikus berendezések hulladékairól szóló 2002/96/EK irányelve szerint az elektromos és elektronikus berendezések többé nem kezelhetőek lakossági hulladékként, és az ilyen elektronikus berendezések gyártói kötelessé válnak az ilyen termékek visszavételére azok hasznos élettartama végén. Az MSI betartja a termékvisszavétellel kapcsolatos követelményeket az MSI márkanév alatt az EU-n belül értékesített termékek esetében, azok élettartamának végén. Az ilyen termékeket a legközelebbi gyűjtőhelyre viheti.

ITALIANO
Per proteggere l'ambiente, MSI, da sempre amica della natura, ti ricorda che....
In base alla Direttiva dell'Unione Europea (EU) sullo Smaltimento dei Materiali Elettrici ed Elettronici, Direttiva 2002/96/EC in vigore dal 13 Agosto 2005, prodotti appartenenti alla categoria dei Materiali Elettrici ed Elettronici non possono più essere eliminati come rifiuti municipali: i produttori di detti materiali saranno obbligati a ritirare ogni prodotto alla fine del suo ciclo di vita. MSI si adeguerà a tale Direttiva ritirando tutti i prodotti marchiati MSI che sono stati venduti all'interno dell'Unione Europea alla fine del loro ciclo di vita. È possibile portare i prodotti nel più vicino punto di raccolta

日本JIS C 0950材質宣言

日本工業規格JIS C 0950により、2006年7月1日以降に販売される特定分野の電気および電子機器について、製造者による含有物質の表示が義務付けられます。
http://www.msi.com/html/popup/csr/cemm_jp.html
http://tw.msi.com/html/popup/csr_tw/cemm_jp.html

India RoHS

This product complies with the "India E-waste (Management and Handling) Rule 2011" and prohibits use of lead, mercury, hexavalent chromium, polybrominated biphenyls or polybrominated diphenyl ethers in concentrations exceeding 0.1 weight % and 0.01 weight % for cadmium, except for the exemptions set in Schedule 2 of the Rule.

Türkiye EEE yönetmeliği

Türkiye Cumhuriyeti: EEE Yönetmeliğine Uygundur

Україна обмеження на наявність небезпечних речовин

Обладнання відповідає вимогам Технічного регламенту щодо обмеження використання деяких небезпечних речовин в електричному та електронному обладнані, затвердженого постановою Кабінету Міністрів України від 3 грудня 2008 № 1057.

Việt Nam RoHS

Kể từ ngày 01/12/2012, tất cả các sản phẩm do công ty MSI sản xuất tuân thủ Thông tư số 30/2011/TT-BCT quy định tạm thời về giới hạn hàm lượng cho phép của một số hóa chất độc hại có trong các sản phẩm điện, điện tử"

产品中有害物质的名称及含量

部件名称	有害物质					
	铅 (Pb)	汞 (Hg)	镉 (Cd)	六价铬 (Cr(VI))	多溴联苯 (PBB)	多溴二苯醚 (PBDE)
印刷电路板组件*	╳	○	○	○	○	○
电池**	╳	○	○	○	○	○
外部信号连接头	╳	○	○	○	○	○
线材	╳	○	○	○	○	○

本表格依据 SJ/T 11364 的规定编制。

○: 表示该有害物质在该部件所有均质材料中的含量均在 GB/T 26572 规定的限量要求以下。

╳: 表示该有害物质至少在该部件的某一均质材料中的含量超出 GB/T 26572 规定的限量要求，但所有部件都符合欧盟RoHS要求。

* 印刷电路板组件: 包括印刷电路板及其构成的零部件。

** 电池本体上如有环保使用期限标识，以本体标识为主。

■ 上述有毒有害物质或元素清单会依型号之部件差异而有所增减。

■ 產品部件本体上如有环保使用期限标识，以本体标识为主。

限用物質含有情況標示聲明書

單元	限用物質及其化學符號					
	鉛 (Pb)	汞 (Hg)	鎘 (Cd)	六價鉻 (Cr^{+6})	多溴聯苯 (PBB)	多溴二苯醚 (PBDE)
電路板	○	○	○	○	○	○
電子元件	—	○	○	○	○	○
金屬機構件	—	○	○	○	○	○
塑膠機構件	○	○	○	○	○	○

備考1. “超出0.1 wt %” 及 “超出0.01 wt %” 係指限用物質之百分比含量超出百分比含量基準值。

備考2. “○” 係指該項限用物質之百分比含量未超出百分比含量基準值。

備考3. “—” 係指該項限用物質為排除項目。

Copyright

MSI Micro-Star Int' l Co.,Ltd.
Copyright © 2017 All rights reserved.

The material in this document is the intellectual property of Micro-Star Int' l Co.,Ltd. We take every care in the preparation of this document, but no guarantee is given as to the correctness of its contents. Our products are under continual improvement and we reserve the right to make changes without notice.

Technical Support

If a problem arises with your system and no solution can be obtained from the user guide, please contact your place of purchase or local distributor. Alternatively, please try the following help resources for further guidance.

- Visit the MSI website for technical guide, BIOS updates, driver updates, and other information: http://**www.msi.com**
- Register your product at: http://**register.msi.com**

Trademark Recognition

All product names used in this manual are the properties of their respective owners and are acknowledged.

Revision History

Version 1.0, 2017/06, First release.
Version 1.1, 2017/06, Update PCIe spec.