FeiyuTech

VLOG pocket

Foldable Smartphone Gimbal

Instructions

EN V 1.2

Catalogue

1. Overview ---------- 1

2. Start to Use ---------- 2

2.1 Fold and Unfold ---------- 2

2.2 Charging ---------- 3

2.3 Smartphone Installation ---------- 3

2.4 Power on / off ---------- 4

2.5 Landscape Switching ---------- 4

3. Function Operation ---------- 5

3.1 Function / Modes Introduction ---------- 5

3.2 Function Button Operation ---------- 6

3.3 Shutter Button Operation ---------- 7

3.4 Trigger Button Operation ---------- 8

3.5. Landscape and Portrait Shot Switching ---------- 8

3.6 Light Indicator ---------- 9

4. Gimbal Initialization ---------- 10

5. Download and Connect App ---------- 11

5.1 Download the App ---------- 11

5.2 Connect the App ---------- 11

5.3 Shooting / control interface ---------- 12

5.4 Firmware Upgrade ---------- 12

6. Specifications ---------- 13

VLOG pocket is a three-axis handheld gimbal suitable for mobile phones. It is small and foldable which can be folded into a pocket. The gimbal supports landscape and portrait shooting, which can also control phone shooting.

Suggestion

Vlog pocket includes below information, please read the information before using the gimbal

1. Quick start guide
2. Online instruction
3. Tutorial

The tutorial videos can be watched at FeiyuTech official website or scan the QR code as below: http://www.feiyu-tech.com/play/

Download the Feiyu ON App

Please download Feiyu ON at your smartphone app store or can the QR code below.

* Requires iOS 9.0 or later, Android 6.0 or later.

iOS Version

Android Version

1. Overview

*This product does not include the smartphone

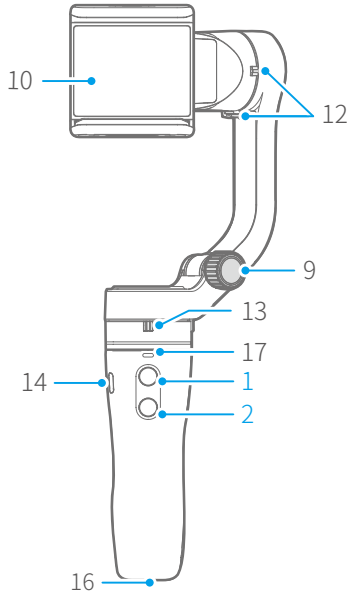

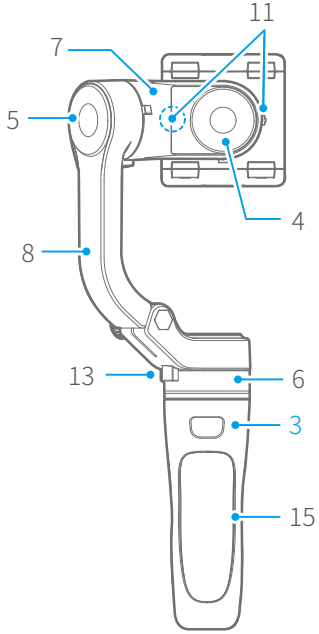

1. Function button
2. Shutter button
3. Trigger button
4. Roll axis
5. Tilt axis
6. Pan axis
7. Cross arm
8. Vertical arm
9. Folding knob
10. Smartphone holder
11. Roll axis clamp
12. Tilt axis clamp
13. Pan axis clamp
14. Micro-USB port
15. Handle
16. 1/4 inch thread hole
17. Status indicator

Accessories

X1

Micro-USB Cable

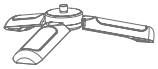
X1

Tripod

2. Start to Use

⚠ TIPS

(1) Please fully charge the battery before powering on the gimbal for the first time.

(2) If the power is too low, the red light will flash three times every five seconds that indicating you should charge it immediately.

(3) When not in use, power off the gimbal.

(4) Unlock the three axis clamp before powering on the gimbal.

(5) Landscape to mount smartphone.

2.1. Fold and Unfold

Unfold

(1) Loosen the folding knob and tighten the knob after unfolding the vertical arm.

(2) Unlock the three axis clamp.

Fold

(1) Lock the three axis clamp.

(2) Loosen the folding knob, and then tighten the knob after folding the vertical arm.

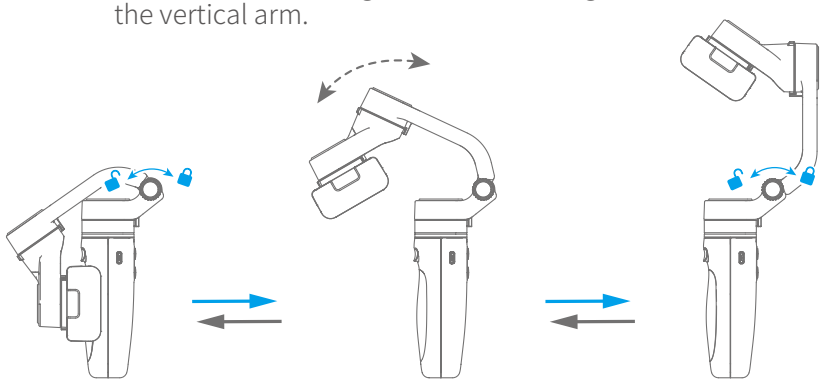

Folded status

Unfolded status

Unlock / Lock the clamp

Take the pan axis clamp for example.

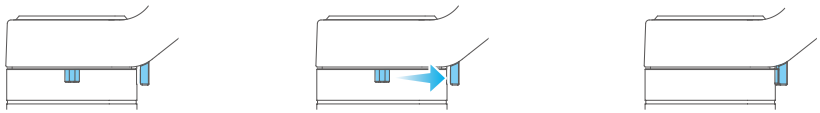

Unlock status

Lock status

2.2 Charging

Connect the USB cable to charge. The indicator light is red when charging, and green when fully charged.

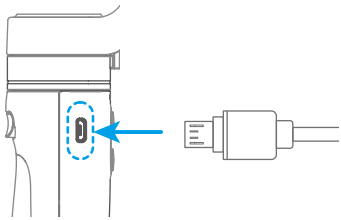

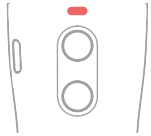

Charging

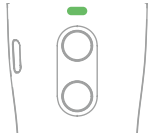

Charge complete

2.3 Smartphone Installation

It is recommended to remove the smartphone case before installation and keep the logo VLOG pocket of the smartphone holder upward.
Keep the smartphone holder in center.

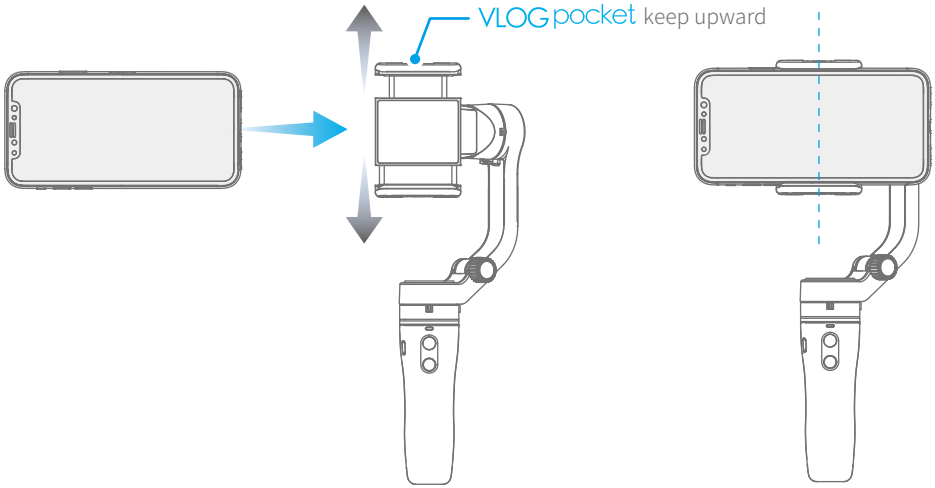

Installation complete

2.4 Power on / off

Unlock the three axis clamp before powering on the gimbal.
Turn on the smartphone only after it is installed securely.

Power on Long time press the function button and release it when you hear the tone. (Green light will change to blue)

Power off Long time press the function button and release it when you hear the tone. (The red light will turn off)

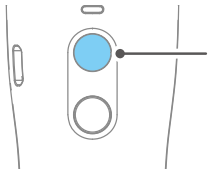

2.5 Landscape Switching

Holding the gimbal, **press and hold the trigger button**, turn the handle forward to the inverted holding, and release the trigger button after adjusting the phone to the appropriate angle. Upside-down handheld can be used to take low angle pictures.

Double click trigger button is recommended before operating the landscape mode.

Please do not rotate the gimbal from your right side to upside down position.

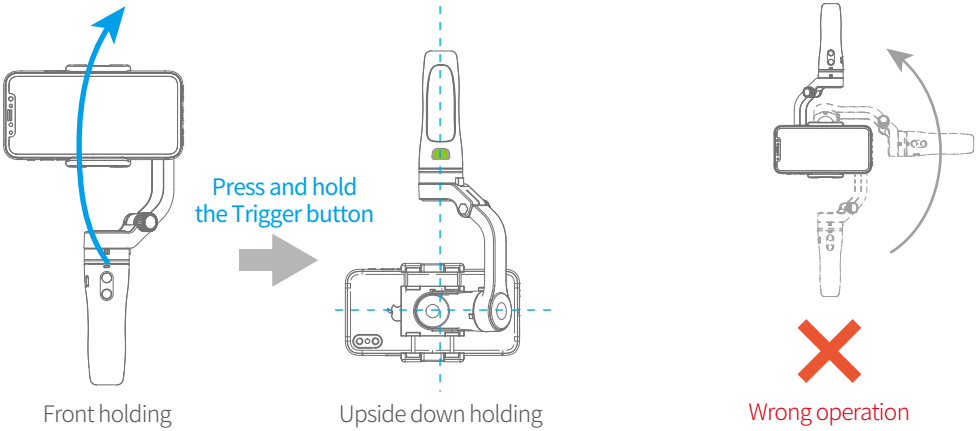

3. Function Operation

3.1 Function / Modes Introduction

Panning Mode（Default mode）

The roll and tilt direction are fixed, and the smartphone moves according to the left-right movements of the user's hand.

Lock Mode

The orientation of the camera is fixed.

Follow Mode

The roll direction is fixed, and the smartphone moves according to the left-right movements, up-down movements of the user's hand.

Reset

Return to panning mode, three axises return to default position.

Manual Lock

Slide the tilt axis to one position for shooting.

Landscape and Portrait Shot

Assist landscape or portrait shooting.

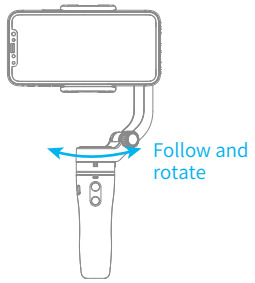

Panning Mode Default mode

Single click the function button

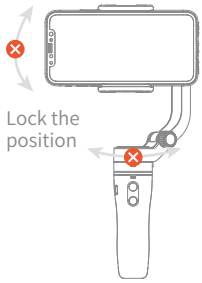

Lock Mode

Click again the function button

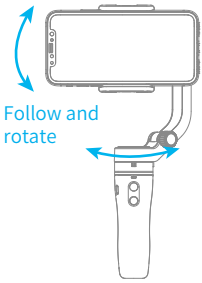

Follow Mode

Press and hold the Shortcut button

3.2 Function Button Operation

Function button	Function		Status Indicator
Single click	Click once	Panning Mode	
	Click again	Lock Mode	
Double click	Landscape and portrait shot switching		Keep current status
Five click	Gimbal Initialization (Single click the function button to wake up)		
Long time press	Power on / off	Power on	
		Power off	

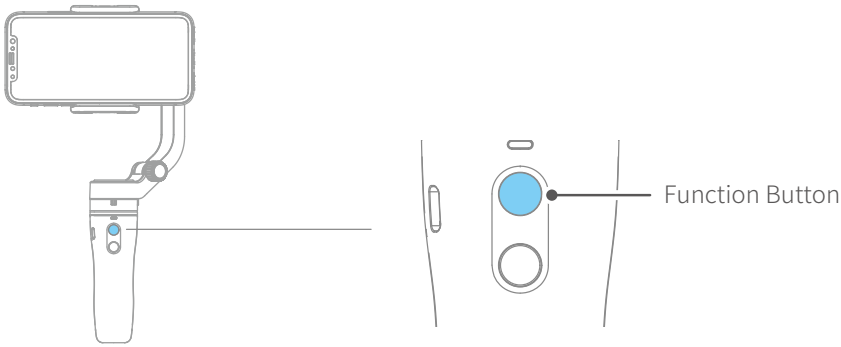

3.3 Shutter Button Operation

The gimbal can control the photography after only Bluetooth is connected with smartphone.

Connect Smartphone

Bluetooth connection

(1) Power on VLOG pocket, open smartphone bluetooth.

(2) Choose below Bluetooth connection way:
a. Choose VLOG pocket Bluetooth to connect like FY_PocketV_xx.
b. Open Feiyu ON app, logon or register via tips to connect.

(3) After Bluetooth connecting successful, the shutter button is activated.

The green light flashes once while other indicator status (About every 5 seconds flashes once)

Shutter Button	Function	Control the App Feiyu ON	Control smartphone camera * via bluetooth
Single click	Photography	✓	✓
	Video (Click again to finished the video)	✓	✓
Double click	Switch to photo / video mode	✓	×
Triple click	Switch front and rear camera	✓	×
Long time press	Video recording in shooting mode (Long press the shutter button again to end the recording)	✓	×

* We suggest close Feiyu ON App when you control smartphone camera.

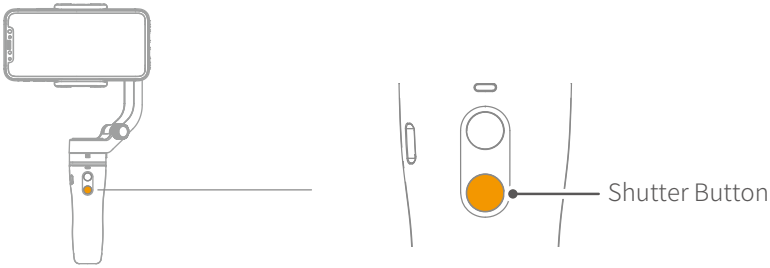

3.4 Trigger Button Operation

Trigger Button	Function	Status Indicator
Press and hold	Enter follow mode (Release trigger button enter into previous mode)	
Double click	Reset	

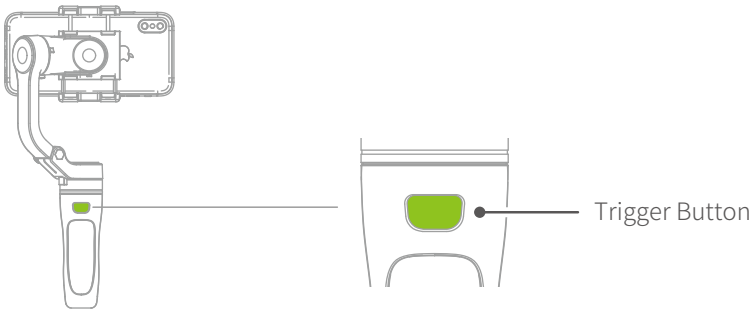

3.5 Landscape and Portrait Shot Switching

Double click the function button to switch modes between landscape and portrait.

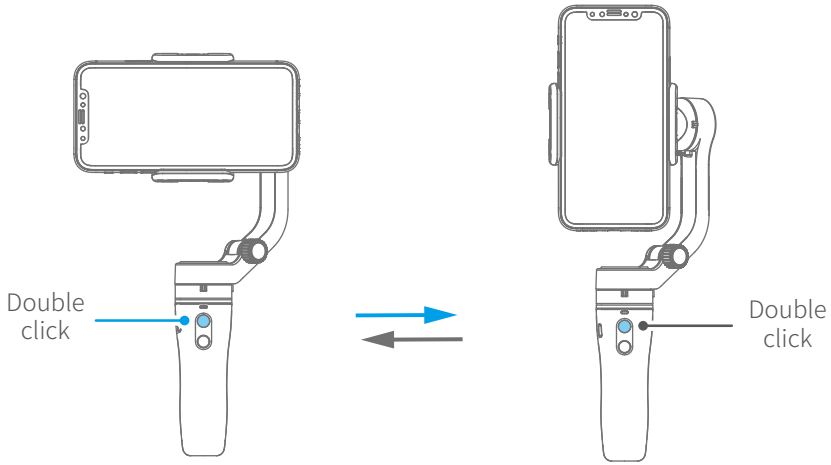

3.6 Light Indicator

Indicator	Instruction
Blue light flashes once	Panning mode / Reset
Constant blue light	Lock mode / Initialization
Blue light flash two times	Follow mode
Green light flashes once	Photo / Video
Green light flashed once in 5 seconds While other indicator status	Bluetooth connected
Green light change to blue	Power on
Red light turn off	Power off
Red light flashes three times	Low power
Red light keeps flashing	Gimbal powering off
Constant red light until turn off	Malfunction Power off with prompt sound

4. Gimbal Initialization

You can initialize your gimbal when:

- When smartphone is not level
- If not used for a long period of time
- In case of extreme temperature variations

Steps

(1) Click the function button five times. The motors will stop working. Status indicator turns solid blue.

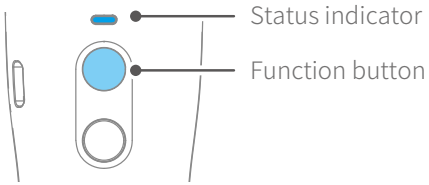

(2) Place the gimbal on a flat, horizontal surface. The gimbal will automatically reset after a few seconds detecting no movement. The blue light will flash three times to indicate end of the reset process.

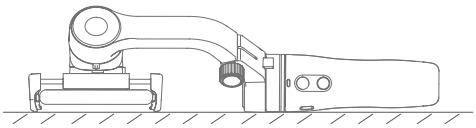

(3) After the initialization is successful, click the function button to wake up.

Note: if the initialization is not successful, click the function button to wake up. restart initialization process.

5. Connect and Use Feiyu ON App

5.1 Download the App

Feiyu ON

Photo/Video	Timer photography	Zooming	Path time-lapse
Object tracking	Face locking	Light tracking photography	Ultra-wide angle panorama
Slow motion	Filter	Beauty	Overlapping images
Video editing	Landscape and portrait switching	Firmware upgrade	.....

Please download Feiyu ON at your smartphone app store or can the QR code below.

* Requires iOS 9.0 or later, Android 6.0 or later.

iOS Version

Android Version

5.2 Connect the App

Open Feiyu ON app and connect the gimbal via tips.

Format Bluetooth of gimbal: FY_PocketV_XX

5.3 Shooting / control interface

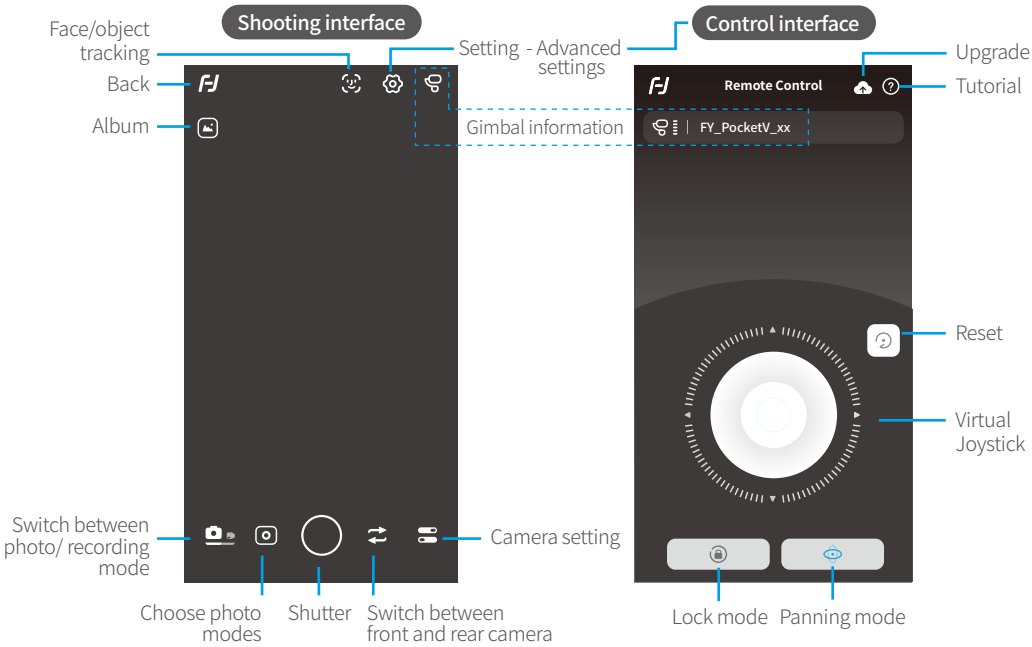

5.4 Firmware Upgrade

Upgrade the firmware through the App.

(1) Click the icon

(2) Select upgrade type.

(3) Follow the prompts to upgrade the firmware.

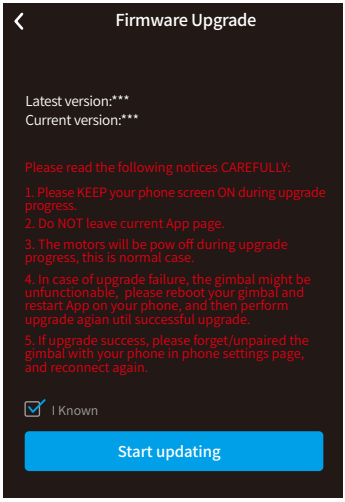

Upgrade type introductions:

Keyboard firmware update: Repair / update or newly add button/touch screen/interaction functions, update more compatibility cameras which can be controlled through WIFI, repair few bugs about camera control through WIFI, and etc.

Bluetooth firmware update: Repair / update or newly add Bluetooth functions, update more compatibility cameras, and etc.

6. Specifications

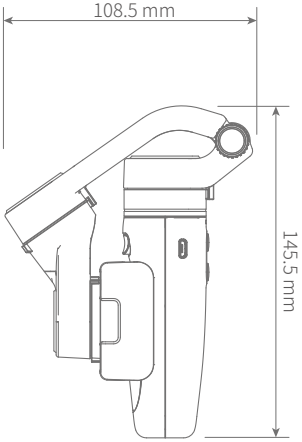

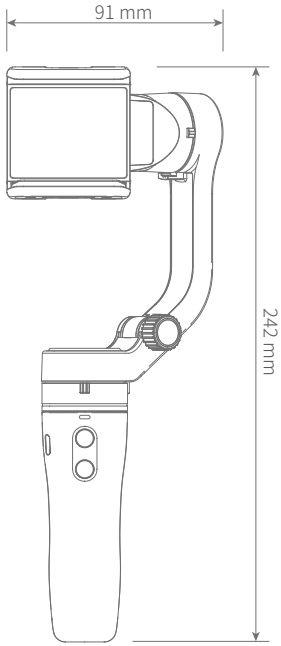

Product Name	VLOG pocket Foldable Smartphone Gimbal
Max. Tilting Range	165°
Max. Rolling Range	240°
Max. Panning Range	330°
Operation Time	8 Hours
Standby Time	14 Hours
Weight	272g (Not including the smartphone)
Payload	240g
Adapter smartphones	iPhone and Android phones (The width of the phone is between 42~88mm)

Disclaimer

Thanks for using Feiyu Gimbal. The information in this document affects your safety and your legal rights and responsibilities. Read the entire document carefully to ensure proper configuration before use, Failure to read and follow instructions and warnings in this document may result in serious injury to yourself or others, or damage to your products or damage to other objects in the vicinity.

By using this product, you hereby signify that you have read this disclaimer and warning carefully and that you understand and agree to abide by the terms and conditions herein. You agree that you are solely responsible for your own conduct while using this product, and for any consequences thereof. You agree to use this product only for purposes that are proper and in accordance with all applicable laws, rules, and regulations, and all terms, precautions, practices, policies and guideline FeiyuTech has made and may make available. FeiyuTech accepts no liability for damage, injury or any legal responsibility incurred directly or indirectly from the use of product.

FeiyuTech will not provide any service for any product obtained from abnormal channels.

Notice

1. Make sure motor spinning is not blocked by external force when gimbal is power on.
2. Gimbal DO NOT contact water or other liquid if the gimbal is not mark waterproof or splash-proof. Waterproof and splash-proof product DO NOT contact sea water or other corrosive liquid.
3. DO NOT disassembly the gimbal except marked detachable. It need send to FeiyuTech after-sales or authorized service center to fix it if you accidently disassembly and cause abnormal work. The relevant costs are borne by user.
4. Prolonged continuous operation may cause the motor surface temperature to rise, please operate carefully.
5. DO NOT drop or strike batteries. If the battery is abnormal, contact Feiyu After-sales support.

Storage and Maintenance

1. Keep the gimbal and battery out of the reach of children and pets.
2. DO NOT leave the gimbal and battery near heat sources such as a furnace or heater. DO NOT leave the gimbal and battery inside of a vehicle on hot days.
3. Please storage the battery in dry environment.
4. DO NOT overcharge or overuse the battery, otherwise it will cause damage to the battery core
5. Never use the gimbal and battery when the temperature is too high or too low.

Official Social Media

Website | Facebook | Youtube | Twitter | Instagram

Facebook: www.facebook.com/feiyutech
YouTube Channel: www.youtube.com/c/Feiyu-tech
Twitter: www.twitter.com/feiyutech
Instagram: www.instagram.com/FeiyuTech
YouTube Channel: www.youtube.com/c/Feiyu-tech
Online Store: store.feiyu-tech.com

Guilin Feiyu Technology Incorporated Company

For more information, please visit our official website www.feiyu-tech.com

E-mail: service@feiyu-tech.com Tel: +86 773 2320865

Due to software and hardware improvements, your actual product might differ from the descriptions and pictures in this user manual. You can get the latest user manual from the official website.