RTS

Innovating the Future of Global Communications

# *BTR-30N, TR-30N, TR-32N*
# *Professional Wireless Intercom System*

*Operating Instructions*

## Proprietary Notice

The product information and design disclosed herein were originated by and are the property of Bosch Security Systems, Inc. Bosch reserves all patent, proprietary design, manufacturing, reproduction, use and sales rights thereto, and to any article disclosed therein, except to the extent rights are expressly granted to others.

## Copyright Notice

Copyright 2019 by Bosch Security Systems, Inc. All rights reserved. Reproduction, in whole or in part, without prior written permission from Bosch is prohibited.

*All other trademarks are property of their respective owners.

## Warranty and Service Information

For warranty and service information, refer to the appropriate web site below:

RTS Intercoms ..... www.rtsintercoms.com/warranty
RTS Digital
RTSTW
AudioCom
RadioCom
Intercom Headsets

## Customer Support

Technical questions should be directed to:

Customer Service Department
Bosch Security Systems, Inc.
www.telex.com

## Technical Questions EMEA

Bosch Security Systems Technical Support EMEA
http://www.rtsintercoms.com/contact_main.php

## Disclaimer

The manufacturer of the equipment described herein makes no expressed or implied warranty with respect to anything contained in this manual and shall not be held liable for any implied warranties of fitness for a particular application or for any indirect, special, or consequential damages. The information contained herein is subject to change without prior notice and shall not be construed as an expressed or implied commitment on the part of the manufacturer.

| | | |
|---|---|---|
| THE LIGHTNING FLASH AND ARROWHEAD WITHIN THE TRIANGLE IS A WARNING SIGN ALERTING YOU OF “DANGEROUS VOLTAGE” INSIDE THE PRODUCT. | CAUTION<br>RISK OF ELECTRIC SHOCK DO NOT OPEN<br>CAUTION: TO REDUCE THE RISK OF ELECTRIC SHOCK, DO NOT REMOVE COVER. NO USER-SERVICABLE PARTS INSIDE. REFER SERVICING TO QUALIFIED SERVICE PERSONNEL. | THE EXCLAMATION POINT WITHIN THE TRIANGLE IS A WARNING SIGN ALERTING YOU OF IMPORTANT INSTRUCTIONS ACCOMPANYING THE PRODUCT. |
| MARKING DEFINTION IF ON PRODUCT. | | |

**WARNING**: APPARATUS SHALL NOT BE EXPOSED TO DRIPPING OR SPLASHING AND NO OBJECTS FILLED WITH LIQUIDS, SUCH AS VASES, SHALL BE PLACED ON THE APPARATUS.

**WARNING**: THE MAIN POWER PLUG MUST REMAIN READILY OPERABLE.

**CAUTION**: TO REDUCE THE RISK OF ELECTRIC SHOCK, GROUNDING OF THE CENTER PIN OF THIS PLUG MUST BE MAINTAINED.

**WARNING**: TO REDUCE THE RISK OF FIRE OR ELECTRIC SHOCK, DO NOT EXPOSE THIS APPRATUS TO RAIN OR MOISTURE.

**WARNING**: TO PREVENT INJURY, THIS APPARATUS MUST BE SECURELY ATTACHED TO THE FLOOR/WALL/RACK IN ACCORDANCE WITH THE INSTALLATION INSTRUCTIONS.

| | |
|---|---|
| ∿ ⎓ | This product is AC or DC powered. |
| CE | |

# *Important Safety Instructions*

1. Read these instructions.
2. Keep these instructions.
3. Heed all warnings.
4. Follow all instructions.
5. Do not use this apparatus near water.
6. Clean only with dry cloth.
7. Do not block any ventilation openings. Install in accordance with the manufacturer's instructions.
8. Do not install near any heat sources such as radiators, heat registers, stoves, or other apparatus (including amplifiers) that produce heat.
9. Do not defeat the safety purpose of the polarized or grounding-type plug. A polarized plug has two blades with one wider than the other. A grounding type plug has two blades and a third grounding prong. The wide blade or the third prong are provided for your safety. If the provided plug does not fit into your outlet, consult an electrician for replacement of the obsolete outlet.
10. Protect the power cord from being walked on or pinched particularly at plugs, convenience receptacles, and the point where they exit from the apparatus.
11. Only use attachments/accessories specified by the manufacturer.
12. Use only with the cart, stand, tripod, bracket, or table specified by the manufacturer, or sold with the apparatus. When a cart is used, use caution when moving the cart/apparatus combination to avoid injury from tip-over.
13. Unplug this apparatus during lightning storms or when unused for long periods of time.
14. Refer all servicing to qualified service personnel. Servicing is required if the apparatus is damaged in any way, such as: the power supply cord or plug is damaged, liquid is spilled or objects fall into the apparatus, the apparatus is exposed to rain or moisture, the apparatus is dropped, or the apparatus does not operate normally.

# Table of Contents


Important Safety Instructions ..... 3

***INTRODUCTION ..... 9***

General Description ..... 9
System Features ..... 9
Controls and Connections ..... 10
BTR-30N – Front Panel ..... 10
BTR-30N – Rear Panel ..... 11
Specifications ..... 12
TR-30N - Top Panel ..... 14
Specifications ..... 16
TR-32N – Top Panel ..... 18
Specifications ..... 20

***INSTALLATION ..... 19***

Unpacking ..... 19
Antenna Connection ..... 20
Antenna Polarization ..... 20
Distance between Antennas ..... 21
Antenna Placement ..... 21
Improving Reception and Increasing Range ..... 23

***OPERATION ..... 25***

BTR-30N ..... 25
Operation ..... 25
Basic Operational Description ..... 25
System Quick Start ..... 25
Transmit and Receive Antennas ..... 26
2-Wire Intercom Ports ..... 26
4-Wire Intercom Ports ..... 28
Auxiliary Input/Output ..... 28
Base Station Link ..... 29
Stage Announce (SA)/Relay ..... 29
Base Station Link Jack ..... 30
Program Jack ..... 30
Powering the Base Station ..... 31
Start Up Screen ..... 31
Status Screen ..... 31
RSSI Screen ..... 32
Group/Channel Select Screen ..... 32
Group/Channel Screen ..... 32
Group/Frequency Screen ..... 32
Frequency Edit (User-Defined Groups Only) ..... 33
Base Main Settings ..... 33
TALK Button ..... 33
Channel Select Button ..... 33
Local Headset Volume and Gain ..... 34
Base Transmitter Power ..... 34
Squelch Settings ..... 34
Stage Announce Level ..... 35
Antenna Power ..... 35
CAN Bus Number ..... 36
Intercom Settings ..... 36
2-Wire Intercom ..... 37
4-Wire Intercom ..... 37
Auxiliary Settings ..... 38
ClearScan ..... 38
Lockout ..... 39
Copy ..... 39
1st Use Defaults ..... 39
Factory Default ..... 39
Connection of Multiple Base Stations with the Link Cables ..... 40
Over-the-Air Data Links ..... 41
Master and Servant Base Stations ..... 43
CAN bus ..... 43
Base Station Link Configurations ..... 45
Wireless Talk-Around Audio Only ..... 46
Link Overview ..... 46
Setup ..... 47
WTA and a SINGLE CAN Bus Network ..... 47
Link Overview ..... 47
Setup ..... 48
WTA and Several CAN Bus Networks ..... 49
Link Overview ..... 49
Setup ..... 49
TR-30N/32N ..... 52
Basic Operational Description ..... 52
System Quick Start ..... 52
Battery Installation ..... 53
Headset Connection ..... 54
Sidetone ..... 54
Antenna Connection ..... 54
On/Off and Volume Control ..... 55
TALK Button ..... 55
Audio Channel Select Button ..... 55
Stage Announce (SA) ..... 56
Wireless Talk Around (WTA) ..... 56
Groups and Channels ..... 57
Transmit Frequency ..... 57
Receive Frequency ..... 58
Microphone Gain ..... 58
Battery Display ..... 58
Low Battery Alert Tone ..... 59
Transmit Power ..... 59
Changing the Transmit Power Setting ..... 59
Squelch Screen ..... 60
Transmit Mode Screen ..... 60
LEDs Off/On ..... 60
Software Version/Band ..... 61
ClearScan™ ..... 61
Lock Out ..... 61
First Use Default ..... 61
Factory Reset ..... 61

RF Monitor Screen ..... 62
Setting Beltpack ID ..... 62
On/Off and Volume Control ..... 63
TALK Button ..... 63
Stage Announce (SA) ..... 63
Wireless Talk-Around (WTA) ..... 64
Groups and Channels ..... 65
Transmit Frequency ..... 65
Receive Frequency ..... 66
Microphone Gain ..... 66
Battery Display ..... 66
Low Battery Alert Tone ..... 67
Transmit Power ..... 67
Squelch Screen ..... 68
Headphone Options: ..... 68
Auxiliary Input: ..... 68
Transmit Mode Screen ..... 68
LEDs Off/On ..... 69
Software Version/Band ..... 69
ClearScan™ ..... 69
Lock Out ..... 69
First Use Default ..... 69
Factory Reset ..... 70
RF Monitor Screen ..... 70
Setting Beltpack ID ..... 70
BTR-30N Menu Structure ..... 72
TR-30N Beltpack Screen Flowchart ..... 73
TR-32N Beltpack Screen Flowchart ..... 74
Frequency Bands ..... 75
Band Pairing for Systems ..... 75
Frequency Plan ..... 76
Troubleshooting ..... 77
Battery Information ..... 78
Battery Warnings ..... 78
Battery Life ..... 78
Cold Temperatures and Batteries ..... 78
2-Wire Systems Specification ..... 79
Certificate Information ..... 80
Accessories and Replacement Parts ..... 83

CHAPTER 1

# Introduction

## General Description

RTS Wireless BTR-30N UHF Synthesized Wireless Intercom system offers reliable, high-performance, high-fidelity full-duplex communications delivered with minimum spectrum usage.

The BTR-30N system includes the BTR-30N frequency agile base station and up to four (4) TR-30N or TR-32N frequency agile beltpacks operating in full-duplex communications. An almost unlimited number of beltpacks may be used with a base station if the beltpacks are in Push-To TX mode (half- duplex).

The BTR-30N system incorporates two (2) audio channel operation, permitting the beltpack operator to choose between two (2) separate audio channels of communication, with the base station tracking the beltpack selection. This allows the user the flexibility to create a party line and a private line within the same beltpack.

The BTR-30N system is perfectly suited for standalone operation and can also interface with other RTS wired intercom systems. In addition to the external intercom systems interfaces, the system provides connections for auxiliary balanced audio input and output, as well as wireless talk-around (WTA) and stage announce (SA) features.

The BTR-30N system has been designed for reliable, efficient operation. Operating in the VHF spectrum, 174 to 216 MHz, and the UHF spectrum 482 to 572 MHz range, the units perform reliable at line-of-sight distances of 300 feet. With available antenna systems from RTS, the effective operating range can be extended. The high-efficiency beltpacks provide between 8 and 11 hours of uninterrupted operation using NiMH rechargeable battery packs.

## System Features

- Base RX and Beltpack TX is in the VHF range, greatly reducing the system's footprint in the congested UHF spectrum.
- Frequency-agile base station and beltpacks. No external computer/device required to select frequencies.
- Backlit base-station LCD allows the user to easily monitor the beltpack's status and change base station frequencies.
- Squelch adjust on the BTR-30N, TR-30N, and TR-32N beltpacks.
- Beltpack's battery level displayed on the base station and in beltpack's menus.
- ClearScan function on base station and beltpack to automatically find the best channels on which to operate.
- Full-duplex (simultaneous talk and listen) or Push-to-Tx (half duplex) operation.
- Compatible with Audiocom (Telex), RTS TW and Clear-Com wired intercoms.
- Two (2) independent channels of intercom audio with the ability to operate party line and RTS matrix on the same intercom channel at the same time.
- WTA (Wireless Talk-Around) beltpack control. This feature allows beltpacks to talk to each other, but their audio is lifted from any wired system connected to the base station.
- SA (Stage Announce) beltpack control. Allows the user to direct their audio to a jack on the back of the base for P.A. systems or other external audio systems.
- Relay contact closure on the base when the SA button is pressed.
- TR-32N features two (2) audio channel binaural operation in either stereo or mono mode.
- TR-32N has a 1/8-inch (3.5mm) jack for auxiliary input from another audio source, such as an IFB, iPod, or other similar device.
- Beltpack units contained in a weather and shock resistant die cast magnesium case.
- Convenient IEC power connector on the base station so the unit can plug directly to outlets. No in-line or wall plug power supply.
- Dark mode configurable on TR-30N and TR-32N beltpacks. This shuts down all LEDs.

# *Controls and Connections*

## BTR-30N – Front Panel

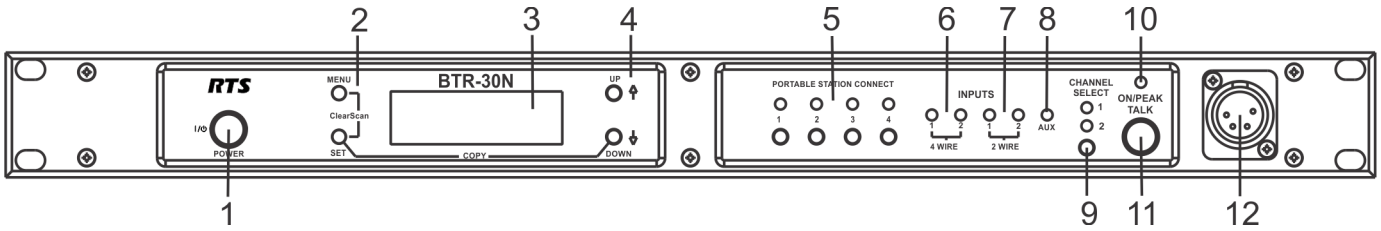


**FIGURE 1.** BTR-30N - Front Panel

1. **Power Switch** - Do not power up a base station within three (3) seconds of the unit being turned off. Voltages within the unit need to drop below a threshold before being repowered. If powered-up in less than three (3) seconds, the unit may boot as the wrong frequency band. Even with the unit powered down via the power switch, some circuits within the base remain energized. To completely remove power to the unit, disconnect the power cord.
2. **[MENU] and [SET] button**s - Use to select menus and set options on the LCD.
3. **Backlit Graphics LCD (Liquid Crystal Display)**
4. **[UP] and [DOWN] buttons** - Use to select base station options on the LCD.
5. **Portable Station Connect** - Use buttons to enable or disable the respective receiver's audio. GREEN LED - Audio enabled, LED OFF - Audio disabled.
6. **4-wire Selection/Peak Input Indicators** - Displays when 4-wire intercoms are active with green indication. A red indication means the intercom input level is too high.
7. **2-wire Selection/Peak Input Indicators** - Displays which 2-wire intercoms are active with a green indication. A red indication means the intercom input level is too high.
8. **Auxiliary Selection/Peak Input Indicator** - Displays if auxiliary input is on with a green indicator. A red indicator means the intercom input level is too high.
9. **Headset Intercom Select** - Controls the intercom to which the local headset is connected. Each press of the button changes the connection to channel 1, channel 2, or both.
10. **Talk/Peak Light** - LED is green when talk button #11 is active. A normal mic gain setting causes the LED to flash red on the loudest speech levels. If the gain is too high, the LED is red at normal speech volumes.
11. **Talk Button** - Press to enable the audio path from the local handset. LED #10 turns green when enabled. A quick press and release latches button on. If the talk function is latched on, pressing the talk button again turns it off.
12. **Local Headset Connector** - Male XLR connector or female XLR connector. A dynamic electret headset microphone is automatically detected. Microphone gain and volume are configured in the software menus.

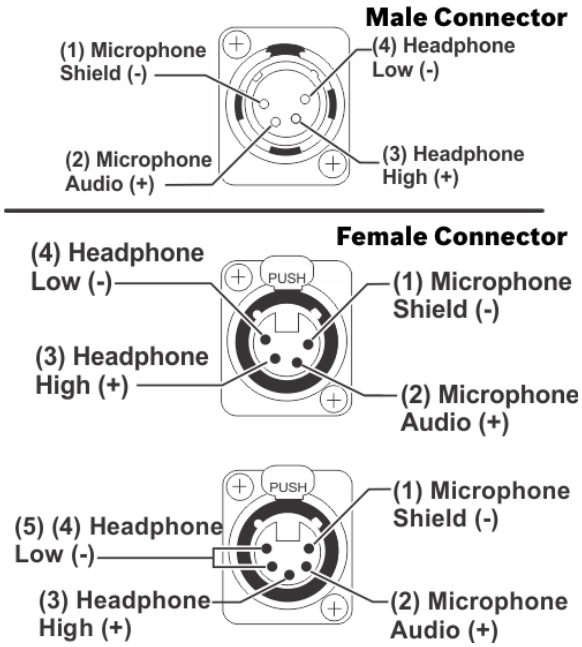


**FIGURE 2.** Local Headset Wiring

## BTR-30N – Rear Panel

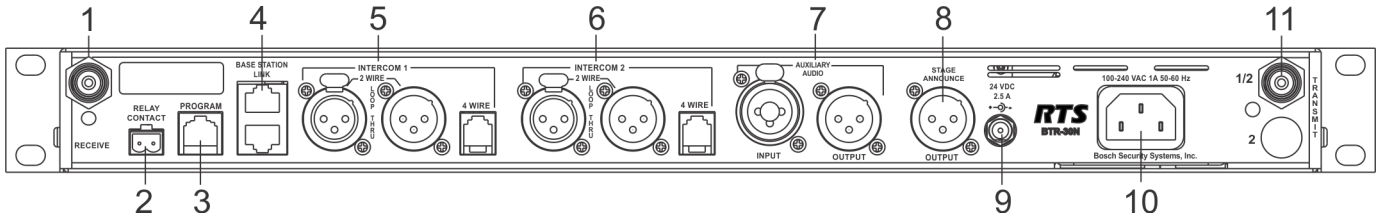


**FIGURE 3.** BTR-30N - Rear Panel

1. **VHF Receive Antenna** - Female “TNC” Connector. Color band on antenna must match color dot on base station.
2. **Relay Contact** - A dry contact closure which activates when a beltpack user presses the stage announce (SA) button. Normally Open (NO). The rating is one amp at 24V maximum.
3. **Program Connector** - Used to update software in unit.
4. **Base Station Link Jacks** - When multiple base stations are connected through this jack, it allows wireless talk around (WTA) audio from the beltpacks to be routed from system to system. Also allows CAN bus data to be passed between base stations.
5. **Intercom 1** - Interface to wired intercom channel 1.

   **2-Wire** - Male and female 3-pin XLR connectors wired in parallel. The connectors are switched to the appropriate intercom configuration via software.

   **4-Wire** - An RJ-45 type jack compatible with Matrix type intercom systems.
6. **Intercom 2** - Interface to wired intercom channel 2.

   **2-Wire** - Male and female 3-pin XLR connectors wired in parallel. The connectors are switched to the appropriate intercom configuration via software.

   **4-Wire** - An RJ-45 type jack compatible with Matrix type intercom systems.
7. **Auxiliary Input/Output** - One 3-pin female XLR / 1/4-inch combination input connector and one 3-pin male XLR output connector.
8. **Stage Announce Output** - Passes the audio from any of the base station’s beltpacks that have selected Stage Announce (SA).
9. **DC Input Jack** - Accepts 24 VDC (5.5mm by 2.5mm screw on plug), 2.5 Amps to power the base station from a DC source. Base may be connected to DC and AC source at the same time. If AC source fails the base automatically switches to DC power. Inside the base there is a user replaceable fuse in-line with the DC input jack. This fuse is a 5A, 250V, 5x20mm, fast acting ceramic cartridge.
10. **Power** - IEC receptacle. Accepts 100–240 VAC, 1A maximum, 50–60Hz.
11. **UHF Transmit Antenna** - Female TNC Connector. Color band on antenna must match color dot on base station.

## Specifications

### *Overall*

RF Frequency

TX Range

482 - 572 MHz in 18 MHz TX bands

RX Range

174 - 216 MHz in two 24 MHz RX bands

Power Requirements

100 - 240 VAC, 50 - 60 Hz 1 Amp Max,, IEC receptacle

DC Only

24 VDC, 2.5 Amps

Temperature Range

-4° F to 130° F (-20° C to 55° C)

Dimensions

19.00” W x 1.72” H x 14.00” D (48.3cm x 4.4cm x 35.6cm)

Weight

7lbs 2oz (3.24kg)

TX UHF Antenna

1/2 Wave (supplied), TNC Male Connector

RX VHF Antenna

End-fed 1/2 Wave (supplied), TNC Male Connector

Frequency Response

200Hz–4kHz

Four Wire Input

Level Adjustable (2Vrms typical)

Two Wire Input

Level Adjustable (2Vrms typical)

Telex Intercom

Input/Output Level Adjustable (1Vrms typical), Line Impedance 300Ω

RTS Intercom

Input/Output Level Adjustable (0.775Vrms typical), Line Impedance 200Ω

Clear-Com

Input/Output Level Adjustable (1Vrms typical), Line Impedance 200Ω

Auxiliary Input

Adjustable (2Vrms typical)

Auxiliary Output

Adjustable (2Vrms typical into 600Ω)

Stage Announce Output

Internally Adjustable (2Vrms typical at rated deviation into 600Ω)

Stage Announce Relay

Dry contact, rated at 1 Amp, 24V Max

Microphone Input Sensitivity

9mV

Local Headset Output

40mW output into 600Ω (1% Distortion)

***Transmitter***

Type

Two Synthesized Transmitters

Transmit Power (each transmitter)

Selectable: off, 10mW, 50mW, 100mW, 249mW

Modulation Type

FM

Deviation

4kHz

RF Frequency Stability

2.5PPM

Modulation Limiter

Peak-Responding Compressor

Radiated Harmonics & Spurious

Exceeds FCC specifications

***Receiver***

Type

Triple Conversion Superheterodyne, four Independent IFs, FM

RF Sensitivity

<0.6µV for 12dB SINAD

Squelch Threshold

adjustable - 12/20/24dB SINAD

IF Selectivity

6dB at 30kHz bandwidth

Image Rejection

70dB or better

Squelch Quieting

90 dB

RF Frequency Stability

2.5 PPM

## TR-30N - Top Panel

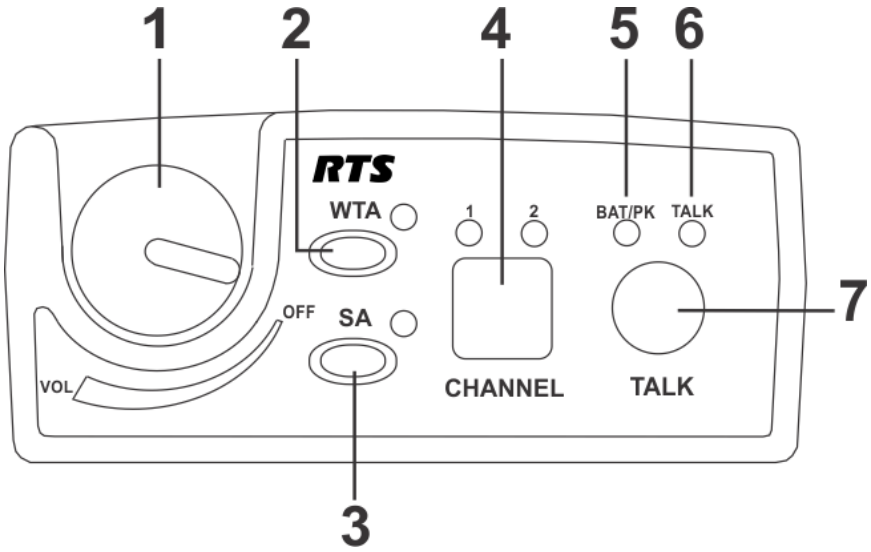


**FIGURE 4.** TR-30N Top Panel

1. **On/Off Volume Control** - Turns the beltpack power on.
2. **Wireless Talk-Around (WTA)** - When pressed, the user's audio disconnects from the wired intercom, auxiliary input/output and the base station's local headset. Other beltpack users on the audio channel can hear the user as normal. The button activates the nearby red LED and the TALK button.
3. **Stage Announce (SA)** - When pressed, the user's audio routes to the stage announce connector on the back of the base station. The user also loses their sidetone, indicating that stage announce is active. The other wireless beltpacks and wired users do not hear the user's audio. The button is non-latching and activates the nearby red LED and TALK button.
4. **Audio Channel Select Button** - Allows user to select either audio channel 1 or audio channel 2.
5. **Bat/Peak Light (BAT/PK)** Light flashes once when unit turns on if the battery is good. If the light stays on, the battery is low. If the light does not flash, the battery is dead. A normal microphone gain setting causes the LED to flash for some of the words at normal speech levels. If the gain is too high, the LED displays a continuous red during all words at normal speech levels.
6. **Talk Light** - LED is on when the talk button, SA, or WTA is active.
7. **Talk Button** - Press to enable the audio path from the local headset microphone. The "TALK" LED, #6, turns red when enabled. A quick press and release latches the talk function, unless latching has been disabled. Holding the button for over a half-second causes the audio path to be enabled only for as long as the button is held. If the talk function is latched on, pressing the talk button again turns it off.

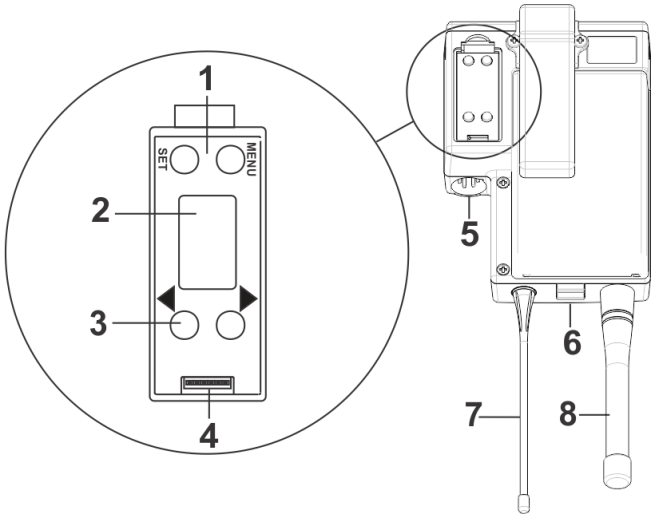


**FIGURE 5.** TR-30N Rear Panel/Connector/Antennas

1. **MENU and SET buttons**- Use to select menus and set options on the LCD.
2. **LCD (Liquid Crystal Display)**
3. **UP and DOWN buttons** - Use to select beltpack options on the LCD.
4. **Programming Connector** - Use to update software in unit.
5. **Headset Connector** - Male XLR or female XLR connector. A dynamic or electret headset microphone is automatically detected by the beltpack and a bias voltage supplied, if needed.
6. **Battery Latch** - Press down to release the battery pack. While holding the latch down, slide the battery pack about 1/8 inch back toward the latch until it stops, then lift it out.
7. **Receive Antenna** - Screw type 1/4-wave replaceable antenna. The color dot on the screw end of the antenna must match color dot on the antenna receptacle.
8. **Transmit Antenna** - Screw type rubber duck replaceable antenna. Color bands near the screw end of the antenna must match color dot on antenna receptacle.

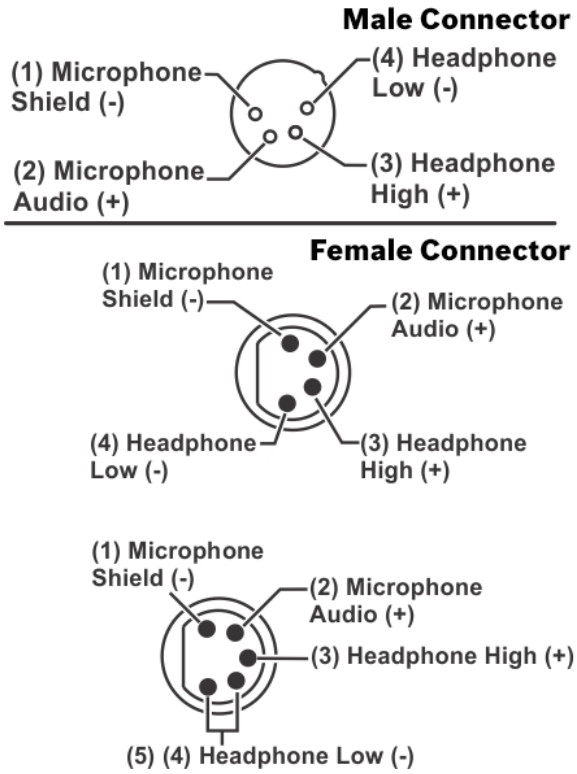


**FIGURE 6.** Headset Jack Wiring

**IMPORTANT:** Microphone gain and transmit mode is set via software menus.

## Specifications

***Overall***

RF Frequency

TX Range

174 - 216 MHz in two 24 MHz TX bands

RX Range

482 - 572 MHz in 18 MHz RX bands

Power Requirements

6 “AA” Cells Alkaline (NiHM Optional)

Current Draw

200mA (Push-To-Talk, Talk On)

Temperature Range

-4°F to 130°F (-20°C to 55°C)

Dimensions

3.75” W x 5.05” H x 1.65” D (9.5cm x 12.8cm x 4.2cm)

Weight

16oz (454g)with alkaline batteries

TX Antenna

Rubber duck (supplied), Screw Type, Replaceable

RX Antenna

1/4 Wave (supplied), Screw Type, Replaceable

Frequency Response

200Hz–4kHz

Microphone input sensitivity

7mV

Local Headset Output

40mW output into 600Ω (1% Distortion)

***Transmitter***

Type

Synthesized

Transmit Power

Selectable: auto (10 or 50 mW), 10 mW, or 50 mW

Modulation Type

FM

Deviation

4kHz

RF Frequency Stability

2.5PPM

Modulation Limiter

Peak-Responding Compressor

Radiated Harmonics &Spurious

Exceeds FCC specifications

***Receiver***

Type

Triple Conversion Superheterodyne, Synthesized FM

RF Sensitivity

<0.6µV for 12dB SINAD

Squelch Threshold

adjustable - 12/20/24dB SINAD (about 1.0 $\mu$V)

IF Selectivity

6dB at 30kHz bandwidth

Image Rejection

70dB or better

Squelch Quieting

90dB

RF Frequency Stability

2.5 PPM

## TR-32N – Top Panel

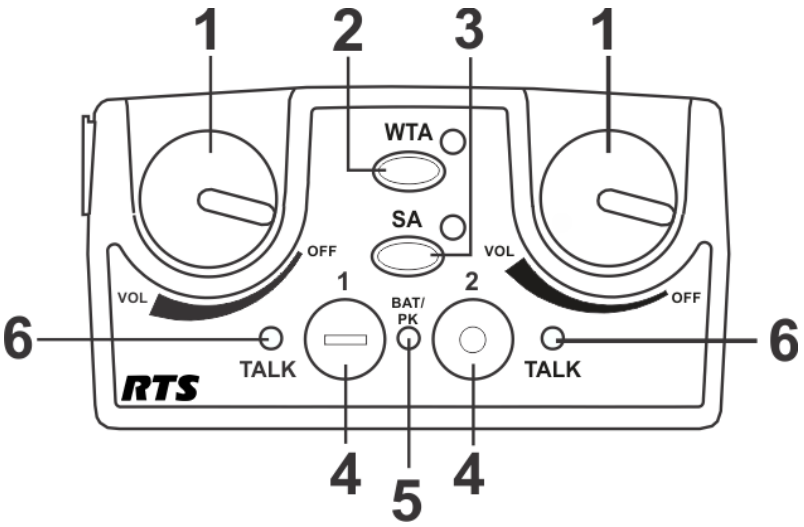


**FIGURE 7.** TR-32N Top Panel

1. **On/Off and Volume Control** - Turns beltpack power on and controls headset volume for intercom channels “1” and “2”. Either knob, “1” or “2”, turns the beltpack on. Both knobs must be off to turn the beltpack off. If only one knob is on, the intercom channel “1” or “2” is on for both transmit and receive.
2. **Wireless Talk-Around (WTA)** - When pressed, the user’s audio disconnects from the wired intercom, auxiliary input/output, and the base station’s local headset. Other beltpack users on that audio channel can hear the user as normal. The software can select which intercom channel(s)—1, 2, 1+2, or the currently selected channel—is activated with the WTA button. The WTA button activates the nearby red LED as well as the software-selected intercom channels TALK LED if not already active.
3. **Stage Announce (SA)** - When pressed, the user’s audio routes to the stage announce connector on the back of the base station. The user also loses their sidetone, indicating stage announce is active. The other wireless beltpacks and wired users do not hear the user’s audio. The button is non-latching and activates the nearby red LED and TALK button.
4. **Talk Button** - Press to enable the audio path to intercom channels 1, 2, or 1+2, from the local headset microphone. The associated TALK LED #6 turns red when enabled. A quick press and release latches the talk function, unless latching has been disabled., Holding the button for over 1/2 second causes the audio path to be enabled only for as long as the button is held. If the talk function is latched on, pressing the talk button again and it turns off.
5. **Low Battery/Peak (BAT/PK) Light** - Light flashes once when unit is turned on if the battery is good. If the light stays on, the battery is low. If the light does not flash, the battery is dead. A normal microphone gain setting causes the LED to flash for some words at normal speech levels. If the gain is too high, the LED displays red during all words at normal speech levels.
6. **Talk Light** - Turns red when enabled by associated TALK or WTA button.

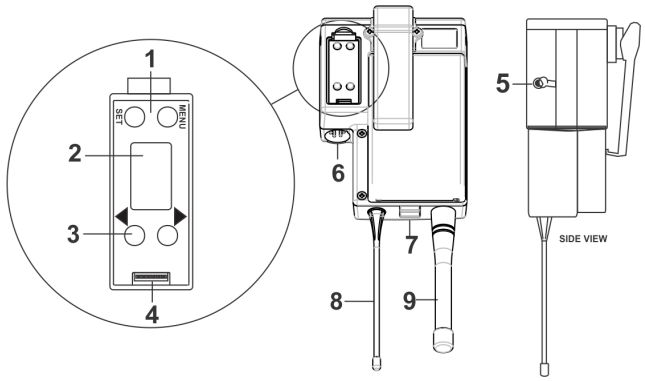


**FIGURE 8.** TR-32N Rear Panel/ Connector/Antennas

1. **MENU and SET buttons** - Used to select menus and set options on the LCD.
2. **LCD (Liquid Crystal Display)**
3. **UP and DOWN buttons** - Used to select beltpack options on the LCD.
4. **Programming Connector** - Used to update software in unit.
5. **Auxiliary Input Audio Jack** - 1/85” (3.5mm) mono input jack. Local only to beltpack.
6. **Headset Connector** - Male XLR connector or female XLR. A dynamic or electret headset microphone is automatically detected by the beltpack and a bias voltage supplied, if needed. 4-pin RTS units are monaural. 5-pin RTS units have a software setup to select if XLR pin 3 or 5 is the channel 2 output and if pin 3 is ground.
7. **Battery Latch** - Press down to release the battery pack. While the latch is held down, slide the battery pack about 1/8 inch back, toward the latch, until it stops, then lift it out.
8. **Receive Antenna** - Screw type 1/4-wave replaceable antenna. The color dot on the screw end of the antenna must match color dot on the antenna receptacle.
9. **Transmit Antenna** - Screw type rubber duck replaceable antenna. The color bands near the screw end of the antenna must match color dot on the antenna receptacle.

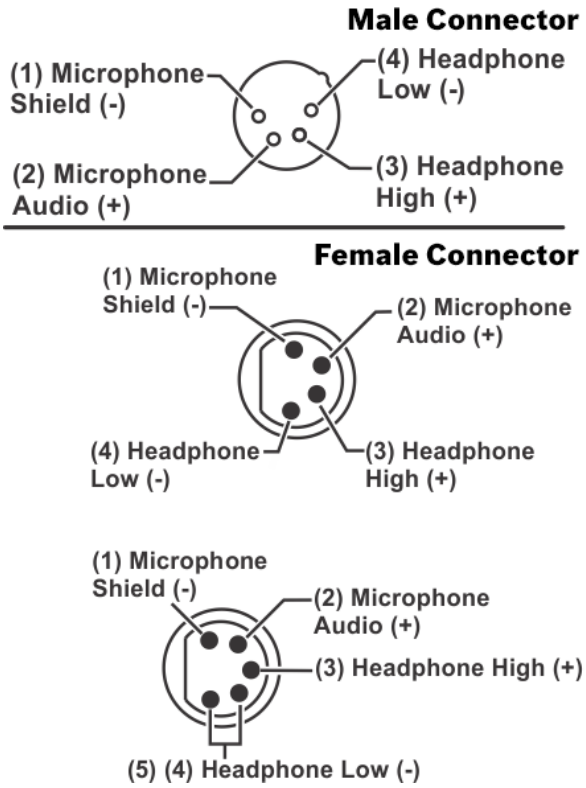


**FIGURE 9.** Handset Jack Wiring

**IMPORTANT:** Microphone gain and transmit mode is set via software menus.

## Specifications

### *Overall*

RF Frequency

TX Range

174 - 216 MHz in two 24 MHz TX bands

RX Range

482 - 572 MHz in 18 MHz RX bands

Power Requirements

6 “AA” Cells Alkaline (NiHM Optional)

Temperature Range

-4° F to 130° F (-20° C to 55° C)

Dimensions

3.75” W x 5.35” H x 2.02” D (9.5cm x 13.5cm x 5.1cm)

Weight

21 oz (595 g) with alkaline batteries

TX Antenna

Rubber duck (supplied), Screw Type, Replaceable

RX Antenna

1/4 Wave (supplied), Screw Type, Replaceable

Frequency Response

200 Hz–4 kHz

Microphone input sensitivity

7 mV

Local Headset Output

40 mW output into 600 Ω (1% Distortion)

### *Transmitted*

Type

Synthesized

Transmit Power

Selectable: auto (10 to 50 mW), 10 mW, 50 mW

Modulation Type

FM

Deviation

4kHz

RF Frequency Stability

2.5 PPM

Modulation Limiter

Peak-Responding Compressor

Radiated Harmonics &Spurious

Exceeds FCC specifications

### *Receiver*

Type

Two, Triple Conversion Superheterodyne Receivers, Synthesized, FM

RF Sensitivity

<0.6 µV for 12 dB SINAD

Squelch Threshold

adjustable - 12/20/24 dB SINAD

IF Selectivity

6 dB at 30 kHz bandwidth

Image Rejection

70 dB or better

Squelch Quieting

90 dB

RF Frequency Stability

2.5 PPM

CHAPTER 2

# Installation

## Unpacking

Unpack your RTS System. Below are the items that should come with your base station and each beltpack.

Contact the shipper or your dealer immediately if anything is damaged or missing.

**BTR-30 N**

| Quantity | Description |
|---|---|
| 1 | BTR-30N Base Station |
| 1 | Power Cord |
| 2 | Antennas (one Transmit and one Receive) |
| 1 | Warranty and Website Information Card |
| 1 | 2 terminal plug (for SA Relay) |
| 4 | Rubber feet |
| 1 | Packaging Checklist |
| 1 | Simplified Declaration of Conformity |

**TR-30N, TR-32N**

| Quantity | Description |
|---|---|
| 1 | TR-30N or TR-32N with Antennas |
| 1 | Battery Pack |
| 1 | Quick Start Card |
| 1 | Warranty and Website Information Card |
| 1 | Belt Clip |
| 1 | LCD Cover |
| 1 | Packaging Checklist |
| 1 | Simplified Declaration of Conformity |

## *Antenna Connection*

The base station is supplied with two (2) antennas. One 1/2-wave antenna for UHF transmit and one end-fed 1/2-wave for VHF receive. The antennas have TNC male connectors.

The frequency range of the antennas should match the receiver and transmitter of the base station. Match the color code on the antenna with the color code on the base station.

Attach the transmit 1/2-wave antenna to the antenna input receptacle labeled Transmit on the right side of the rear panel. The antenna should be vertically aligned.

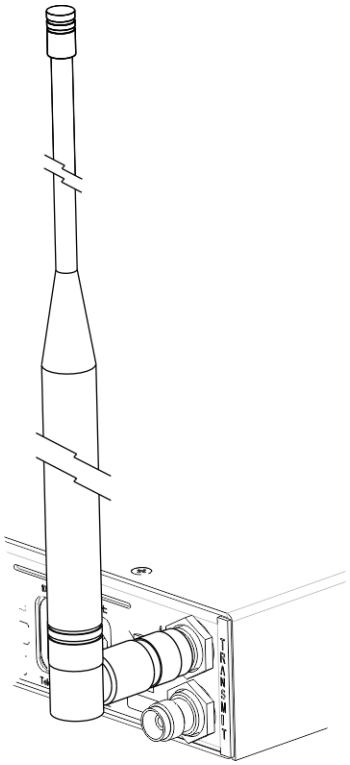


**FIGURE 10.** Attaching Transmit 1/2-Wave Antenna

Screw the two VHF antenna halves together. Attach the receive end-fed 1/2-wave antenna to the antenna input receptacle labeled Receive on the left side of the rear panel. The antenna should be vertically aligned.

**NOTE:** If needed, adjust the set screw that is near the 90 degree elbow of the antenna to keep the antenna upright.

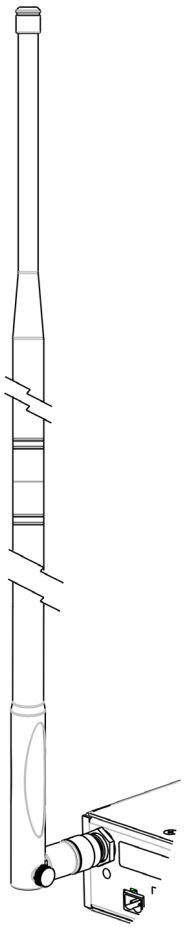

**FIGURE 11.** Attaching Receive End-fed 1/2-Wave Antenna

## *Antenna Polarization*

The RTS Wireless Intercom System is vertically polarized. This means both the transmitting and receiving antennas should operate in the vertical position.

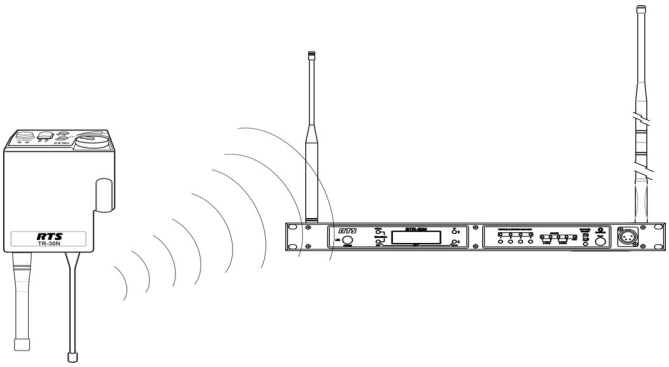


**FIGURE 12.** Vertically Polarized Antennas

## *Distance between Antennas*

The distance between the base station's receive and transmit antennas is not adjustable when the antennas are connected directly on the back of the unit.

The antennas can be remotely mounted for a better signal path. An RTS coax assembly with remote antennas may be required. See "Accessory" section for ordering information.

**NOTE:** If your base station is to be located in a shielded rack mount enclosure or other poor RF locations, you must remotely mount the antennas with coax assemblies. See "Accessories and Replacement Parts, for remote mounting hardware.

## *Antenna Placement*

Proper antenna placement probably has the most effect on your RTS Wireless Intercom System's overall performance. The following suggestions result in optimum performance.

Proper placement of the beltpack can be critical. The antennas should be in the open. Bending the antennas up and placing the beltpack in a pocket, etc., reduces the system's distance. The unit should be worn on the belt with both antennas vertical for best operating range and performance.

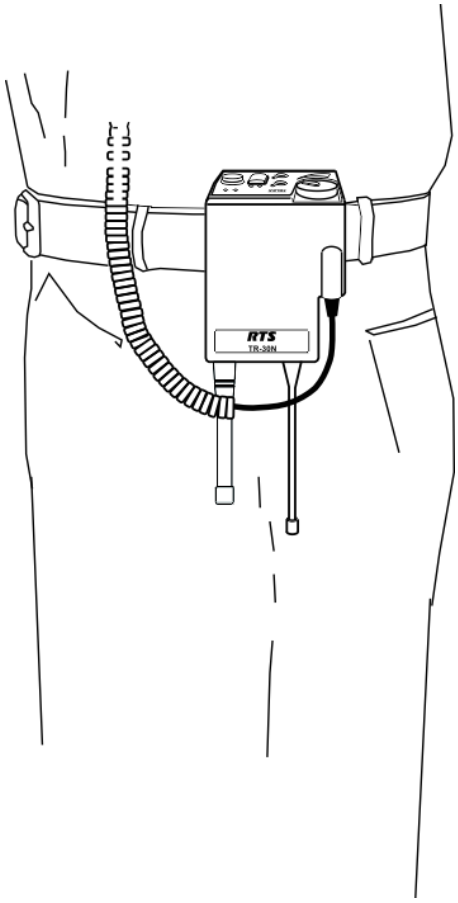


**FIGURE 13.** Proper Dressing of the Antenna

Keep the distance between the base station and the beltpacks as short as possible. The greater the distance, the weaker the signal. Make sure the "signal paths" between the base station and beltpacks are unobstructed. You should be able to visibly locate the base station antennas at all times for best performance.

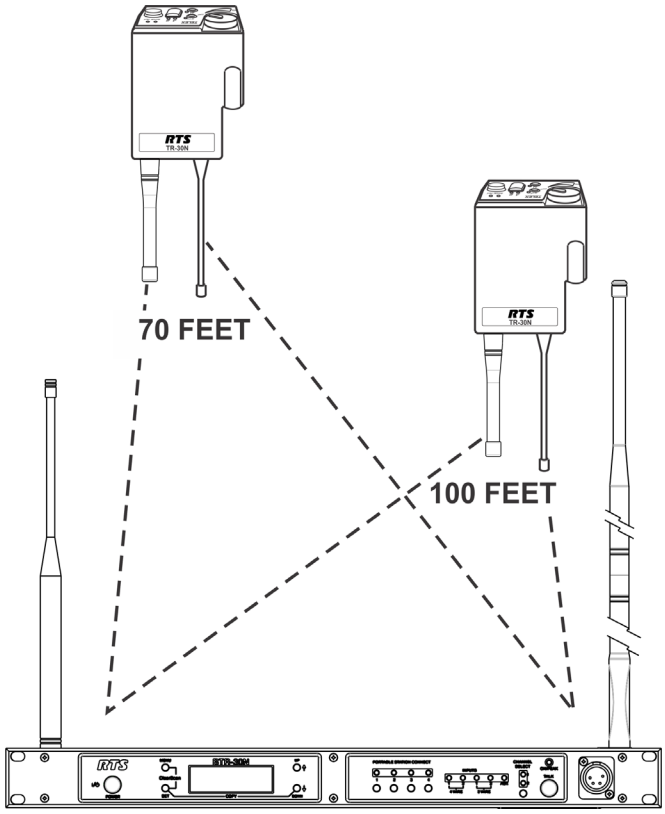


**FIGURE 14.** Distance Between Base Station and Beltpack

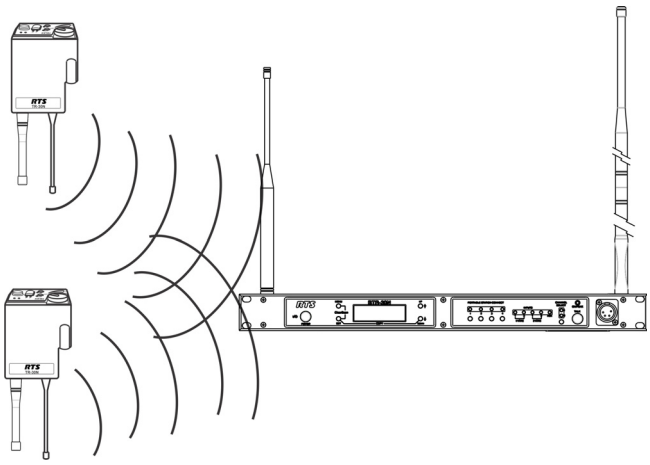

**FIGURE 15.** Keeping Site Clear to Antenna

Attempting to operate the wireless intercom system through or around walls, ceilings, metal objects, etc. reduces system range and performance.

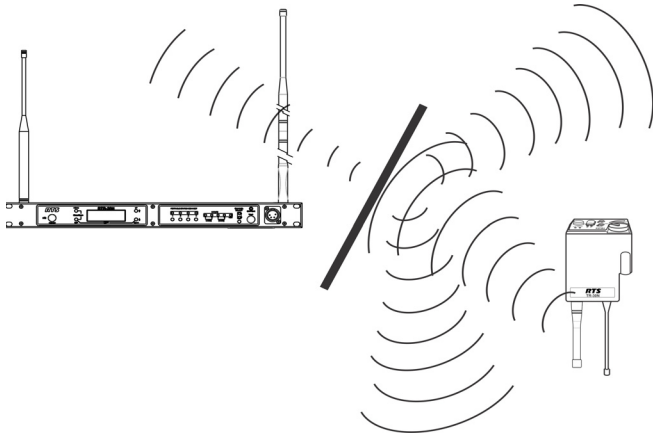

**FIGURE 16.** Operating System Near Obstructions

| | |
|---|---|
| **IMPORTANT:** | DO NOT mount the base station antennas on or next to: metal, such as beams; walls with metal studs; or equipment racks, etc. This also applies to antennas assembled directly to the Base Station. Mounting antennas near metal detunes the antennas, which can result in noise or loss of RF signal at the Base Station. See Figure 17. |

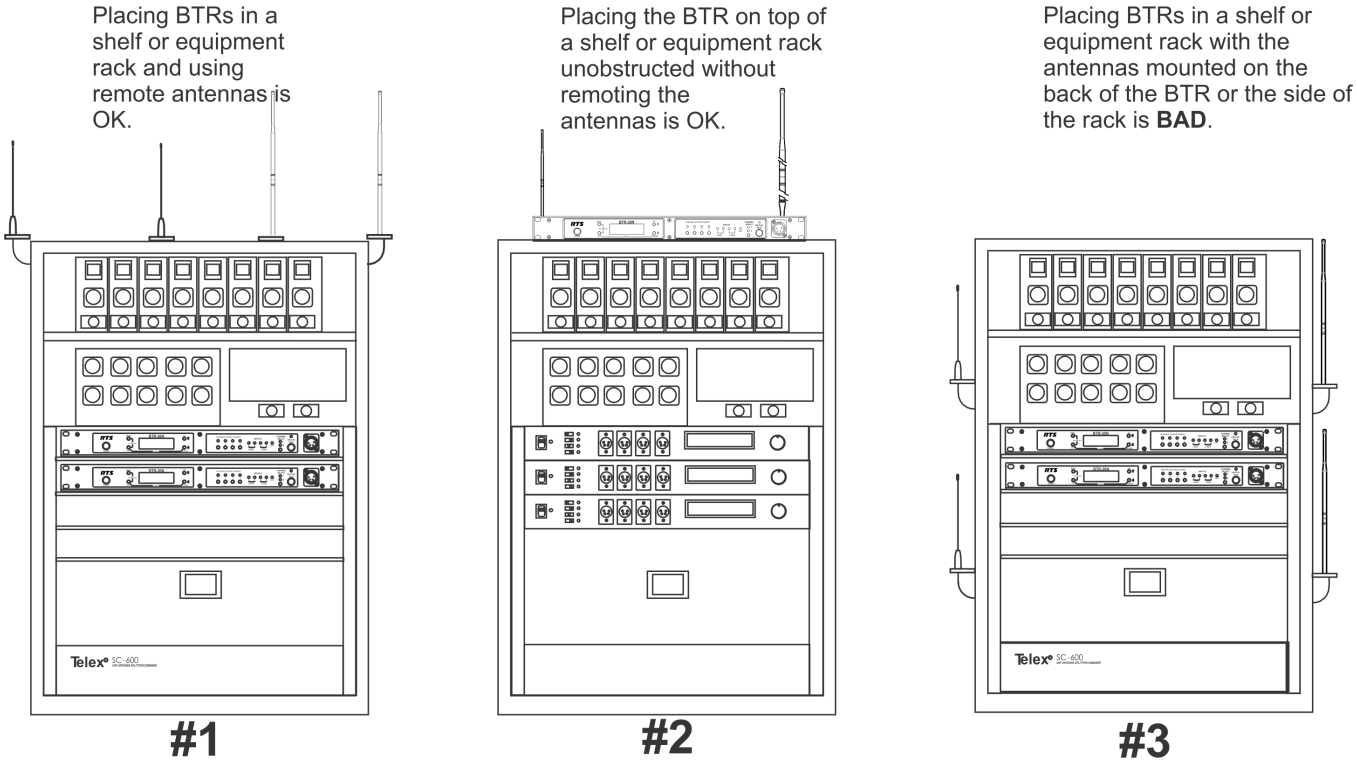


**FIGURE 17.** Antenna Placement

## *Improving Reception and Increasing Range*

Keeping the distance from the base station and beltpack as short and unobstructed as possible produces the most reliable antenna performance.

The base station is supplied with two (2) antennas. This provides satisfactory system performance in most applications. System range can be enhanced by remotely mounting the antennas. The antennas are ground plane independent, so a ground plane is not required for good performance.

CHAPTER 3

# Operation

## *BTR-30N*

### Operation

This section discusses the operation and features of the BTR-30N base station, opening with base operation and quick system setup. It then discusses basic interfacing and setup of a base station, then ends with the connection of multiple base stations and discussion of the links between them.

### Basic Operational Description

The BTR-30N narrow band wireless intercom system offers the most comprehensive, user-friendly, and versatile set of features available in wireless intercom systems anywhere in the world.

The base station accommodates up to four (4) full-duplex TR-30N or TR-32N beltpacks, and can be used with an unlimited number of beltpacks in push-to-TX (half-duplex) operation. In push-to-TX mode, the unit provides a First On Latch Out feature which allows only one beltpack transmitter to be active at a time when multiple users are on a single base receive channel.

The base station, via the beltpacks or it's local headset, allows communications with other wireless or wired users. The 2-wire and 4-wire intercoms may even be used at the same time. The wired audio interfaces to the base are:

- 2-Wire (Telex, RTS, Clear-Com) - 2 intercom channels
- 4-Wire - 2 audio channels
- Auxiliary (both input and output)
- SA (Stage Announce) (output)
- WTA (Wireless Talk-Around)/ 2 channels of private 2-wire intercom among TR-30N and TR-32N beltpacks
- Local base station headset

The base station also features:

- A relay closure activated when the SA button is pressed at any beltpack
- Four (4) easily accessible portable connect buttons on the front panel. Use the buttons to turn off the audio from any of the four (4) base receivers while at the same time killing the talk/transmitter at the associated beltpack
- 36 engineering selected, intermodulation avoiding, factory-defined groups
- The ability for users to enter frequencies of their own via 12 user-defined groups

### System Quick Start

The following is a list to quickly get a base station and beltpacks operating.

1. Unpack **the base**.
2. Connect the **power cord and antennas**.
3. Connect **the base** to audio interfaces, such as: 2-wire, 4-wire, SA, Auxiliary, or local headset.
4. Press and hold **MENU** while powering up the base station.
5. When the base station displays FACTORY SETUP, release **MENU.**
6. Unpack **the beltpacks**.
7. Press **MENU** while powering up the beltpack(s).
8. Using the UP and DOWN arrow buttons, change the **beltpack channel** to an unoccupied receive channel on the base station.
9. Press **SET** twice to set channel and group.
   *The base should now display the audio channel of the beltpack and a battery symbol appears shortly.*
10. Plug a **headset** into each beltpack.
11. Adjust the **microphone gain** in the software menu so the overmodulation light flashes only on some of the words at normal speech levels.

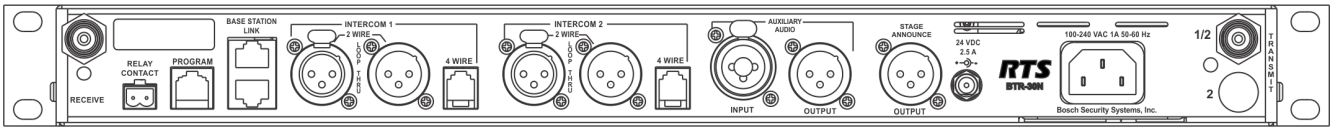


**FIGURE 18.** BTR-30N Rear View

## Transmit and Receive Antennas

The TNC transmit jack and receiver jack are both labeled on the rear of the unit. The base station comes with two (2) antennas. Always match the color dot on the rear panel of the base station with the colored band on the antenna.

## 2-Wire Intercom Ports

The base station has the ability to interface with two (2) 2-wire external audio intercom systems. These XLR jacks are designated intercom 1 and 2 on the rear panel.

They accept Telex, RTS, and Clear-Com types of intercom systems. The pinouts of these standard types of intercom are shown in Figure 19.

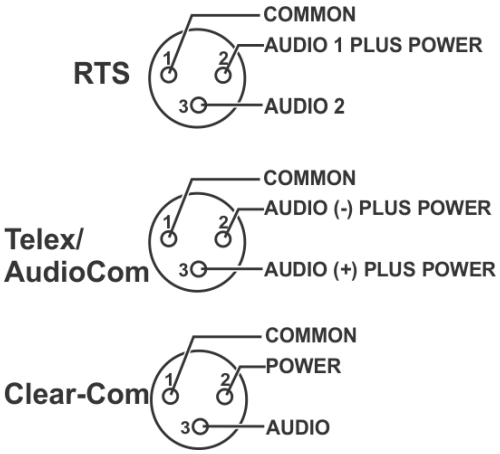


**FIGURE 19.** Pinouts of RTS, Telex, and Clear-Com Intercoms

The base station does not require wet intercom lines for operation. Wet intercom lines are those with D.C. voltages on them for powering 2-wire devices. The base loops through wet intercom lines with currents up to two (2) Amps.

**WARNING:** Do not loop through more than two (2) Amps of current. Damage to the base station may result.

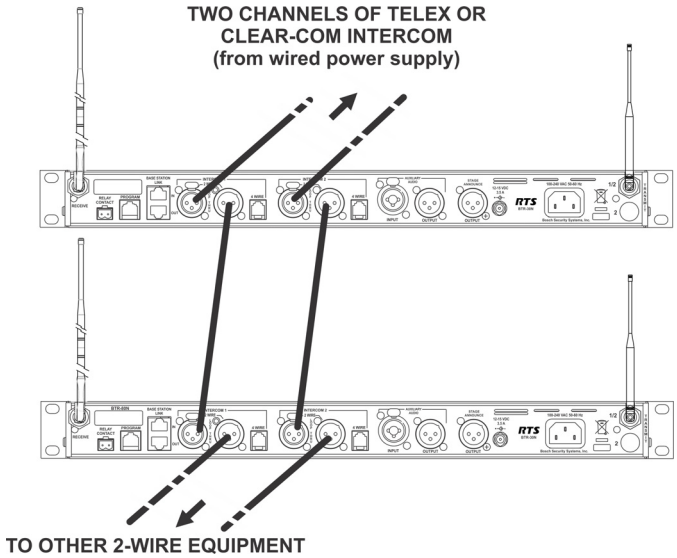


**FIGURE 20.** Loop-through of two base stations connected with Telex/Audiocom or Clear-Com Intercoms

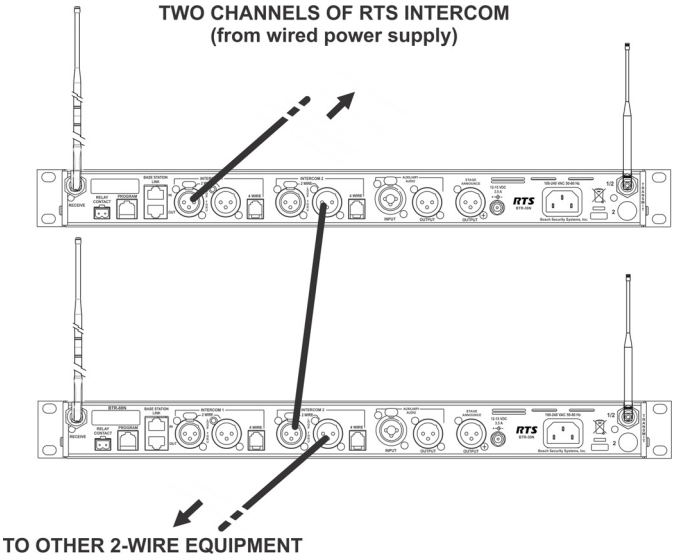


**FIGURE 21.** Loop-through of two base stations connected with RTS Intercoms

If multiple base stations are connected via 2 -wire intercom and no 2-wire power supply is involved to terminate the 2-wire, then termination plugs for the type of 2-wire system used must be at one end of each intercom line.

Since RTS-TW carries both channels of audio on one (1) cable, the four (4) intercom **XLR connectors are connected in parallel** when RTS is selected. Thus any one (1) of the four (4) intercom XLRs may be used for RTS input. Looping through of the audio, shown in Figure 21, may also be accomplished via any of the rear panel XLRs when in FTS mode. For a description of how to set up the 2-wire ports, refer to Intercom Settings in this section. The 2-wire intercom may be used at the same time as the 4-wire intercom.

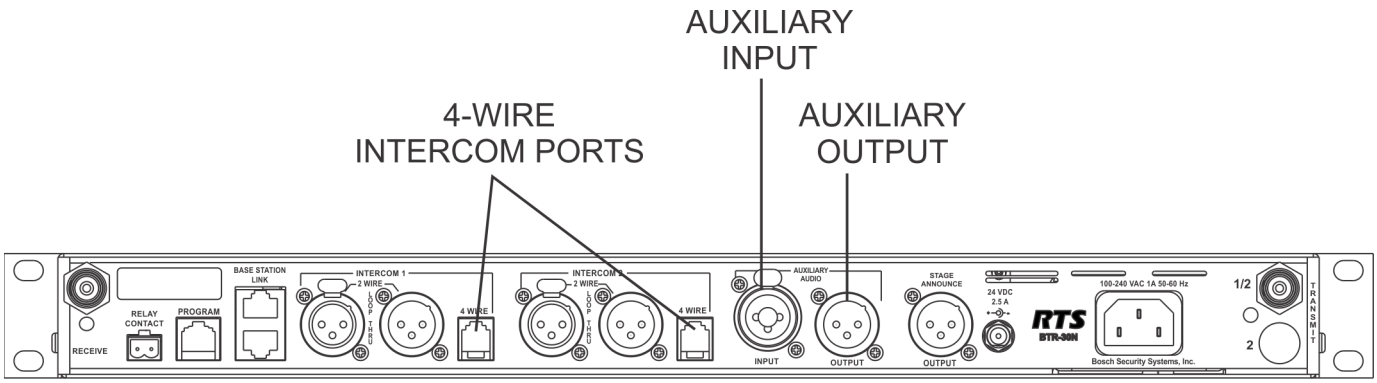


**FIGURE 22.** BTR-30N Rear View

## 4-Wire Intercom Ports

The BTR-30N can connect to two (2) 4-wire audio intercom systems. These 8-pin modular jacks (RJ-45) are designated 4-wire under intercom 1 and 2 titles on the rear panel. (See Figure 22). The jack's pinout is shown in Figure 23.

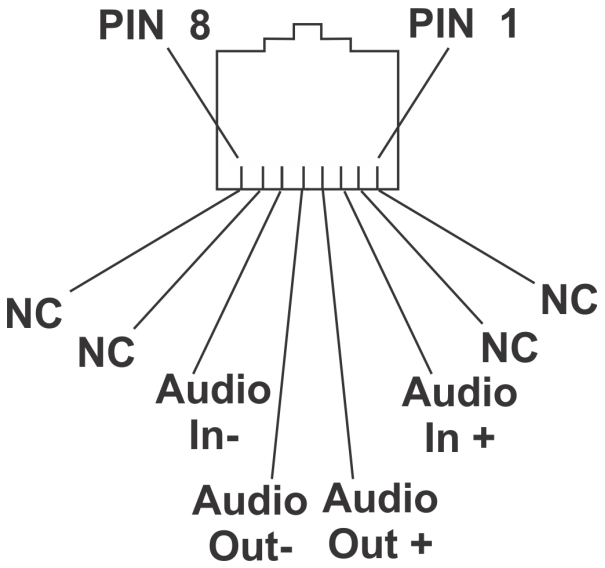


**FIGURE 23.** Pinout of the 4-Wire Jack

The 4-wire intercom may be used at the same time as the 2-wire intercom.

## Auxiliary Input/Output

The auxiliary input jack is a combination jack. It accepts either a 3-pin XLR or a 1/4" (6.3mm) plug. The expected input is a balanced line level input. Shown in Figure 24, the XLR plug and 1/4" plug are wired in parallel

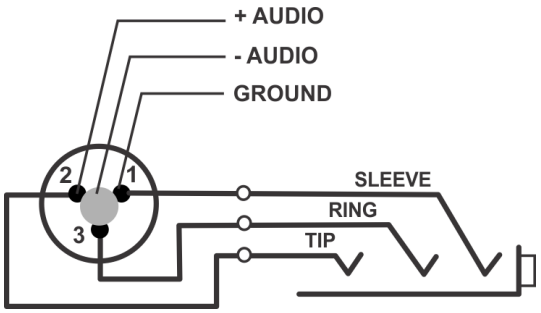


**FIGURE 24.** Auxiliary Input XLR and 6.3mm Jack Pinouts

The auxiliary output jack is a 3-pin XLR jack. It produces a line level balanced output. Please refer to Figure 25.

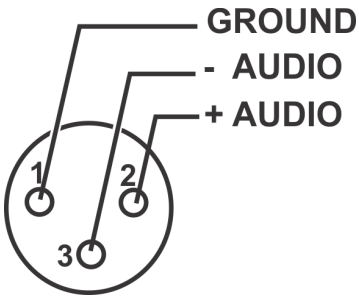


**FIGURE 25.** Pinout of the Auxiliary Output Jack

The auxiliary input/output can be set to local, global, or off. (See the Aux Settings menu in the base). The output level is configured in the software.

- Local Aux Input - The input audio is only heard at the base station's local headset and beltpacks.
- Local Aux Output - The output audio is only heard at the base station's local headset and beltpacks.
- Global Aux Input - The input audio is heard at the base station's local headset and beltpacks and is placed on the 2-wire/4-wire intercom.
- Global Aux Output - The output audio is heard at the base station's local headset and beltpacks and is placed on the 2-wire/4-wire intercom.
- Off - the auxiliary input and output is off.

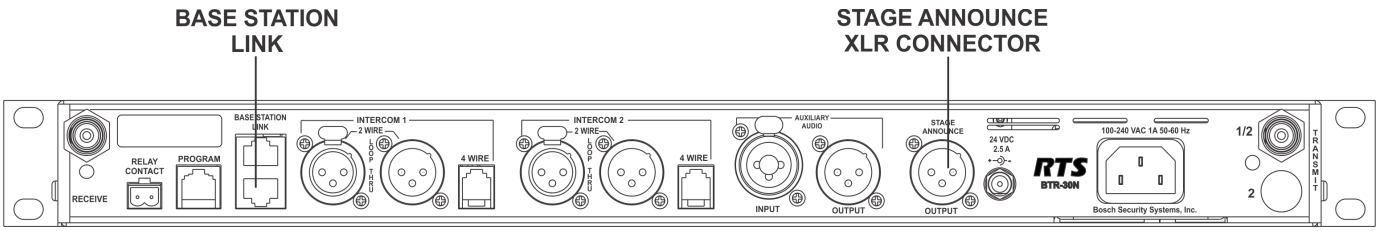


**FIGURE 26.** BTR-30N Rear View

## Base Station Link

This pair of RJ-45 jacks allow the passage of WTA, WTA termination control voltage, and CAN bus data between multiple base stations. Up to eight (8) base stations may be connected with the base station link. If just using WTA between bases, up to 16 base stations can be connected together. The pinout of the IN jack and OUT jack may be seen in Figure 27 and Figure 28

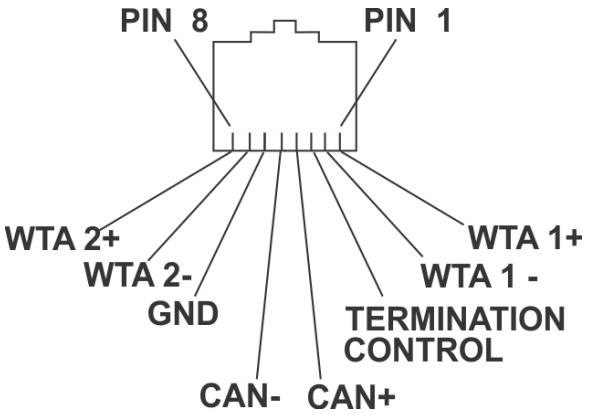


**FIGURE 27.** Base Station Link IN RJ-45 Jack Pinout

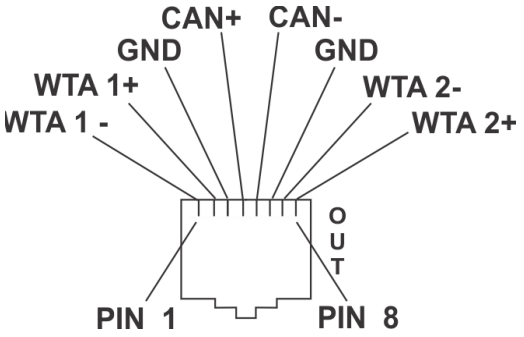


**FIGURE 28.** Base Station Link OUT RJ-45 Jack Pinout

## Stage Announce (SA)/Relay

The Stage Announce 3-pin XLR connector (see Figure 26) is where audio exits the base when a beltpack user presses the SA button. The pinout of the plug connector is shown in Figure 29.

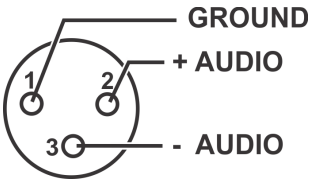


**FIGURE 29.** Stage Announce Pinouts

The stage announce output is balanced audio at line level. The output level is configured in the software.

A relay contact closure also activates when a beltpack user presses the SA button. The contacts are normally open (N.O.). The relay schematic is shown in Figure 30. The rating of the relay is 1 Amp at 24 volts AC or DC maximum.

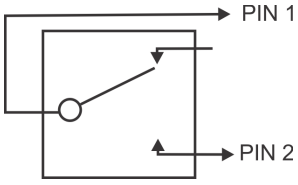


**FIGURE 30.** Relay Output Schematic (Normally Open)

A **Phoenix** type connector (supplied) plugs into the relay contact port on the rear of the base station. This connector provides a screw-type closure for an easy connection to wires. See Figure 31.

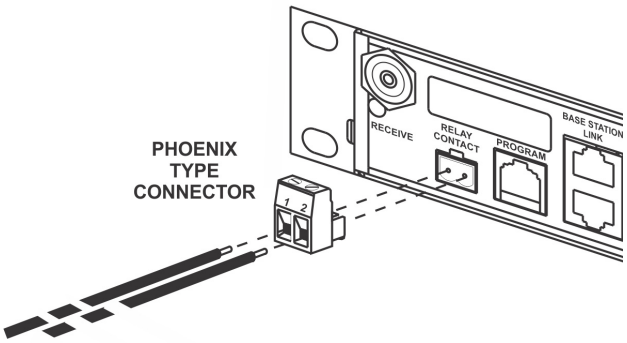


**FIGURE 31.** Screw Terminal Adapter

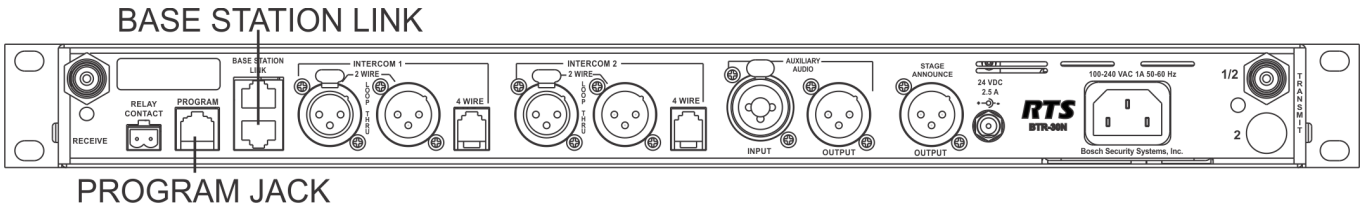


**FIGURE 32.** BTR-30N Base Station Link Jack and Program Jack

## Base Station Link Jack

WTA 1 and WTA 2 in the BTR-30N are two (2) independent 2-wire intercom channels. Up to 16 base stations may be connected together to share WTA audio. Do not confuse WTA audio with CAN bus data, as only eight (8) bases may be connected to share CAN bus data. Not only does the WTA Link cable pass both channels of WTA audio, it passes a logic level so the 1st base station in the chain is the only one providing a termination of the WTA intercom channels. Care must be taken to connect cables between base stations from the OUT of base one (1) to the IN of base two (2) and so forth. If the WTA link cable is passed from OUT to OUT or IN to IN, the WTA audio may terminate in multiple places and cause the WTA audio level to be greatly reduced.

The base station link jacks can interface with other base stations via two (2) different types of cables:

- Base Link Cable (BLC)
  - Straight through cable. Passes CAN data, WTA audio, and WTA termination signal.
- CAN Bus Termination Cable (CTC)
  - Passes WTA audio and WTA termination signal, but does not pass CAN data. Acts as a termination of the CAN networks on either side of it.

Detailed information on the pinout and operation of these cables can be found in “Connection of Multiple Base Stations with the Link Cables” on page 40.

## Program Jack

This jack is only used for updating the internal software of the base station. It is typically used only by the manufacturer and service centers.

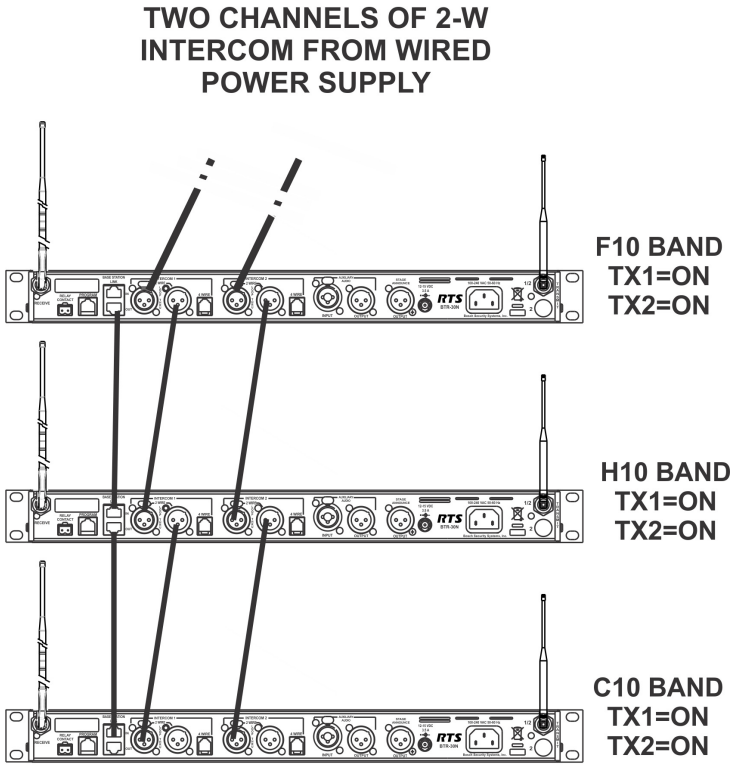


**FIGURE 33.** Multiple Base Stations Connected via 2-Wire Cables Sharing WTA Audio

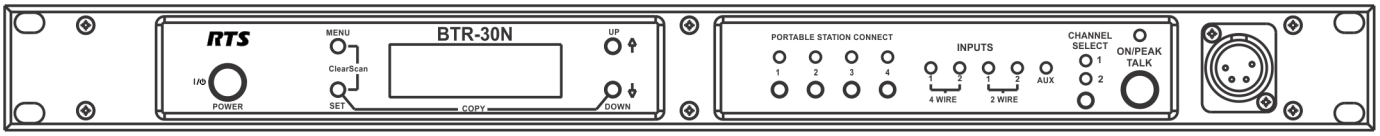


**FIGURE 34.** BTR-30N - Front Panel

## Powering the Base Station

The base station may be powered two (2) different ways:

- Line power at the IEC receptacle. Accepts 100–240VAC, 1A max., 50 or 60Hz.
- 24 VDC Power. Accepts a 5.5mm by 2.5mm screw on plug. Source must supply at least 2.5 Amps.

To **power on the base station**, do the following:

> Press the **POWER button** located on the far left of the base station front panel.

To **power off the base station**, do the following:

> Press and hold the **POWER button**.

Both line power and DC power can connect to the base station at the same time. If AC line voltage drops, the base draws power from the DC input automatically. When the AC line power is restored, the base automatically switches back to AC power. There is no interruption in the base operation during these transitions.

**CAUTION:** Do not power up a base station within three (3) seconds of the unit being turned off. Voltages within the unit need time to drop below a threshold. If powered up within the above time, the unit may boot as the wrong frequency band.

**WARNING:** Even with the unit powered down via the power switch, some circuits within the base remain energized. To completely remove power to the unit, disconnect the power cord.

## Start Up Screen

When the BTR-30N powers up, the first screen displayed is the **Start Up** splash screen. It displays for about three (3) seconds. This screen contains both the software version number and band ID of the base. Figure 35 shows a screen indicating software version sb2145L and a F10 band unit.

**FIGURE 35.** Start Up Screen

After three (3) seconds the status screen appears.

**NOTE:** A complete screen flowchart of the base station is available in *Additional Resources*.

## Status Screen

The **Status** screen is the main information screen of the base station. It displays a number of system items:

- Frequency Group
- Band of Base Station
- Mode of Base Station
- Transmitter 1 Power Setting
- Transmitter 2 Power Setting
- Beltpack Current Activity
- Battery Life
- Base Receiver Status

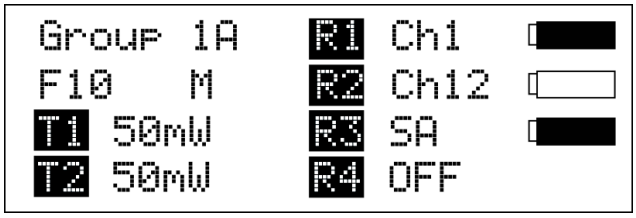


**FIGURE 36.** Status Screen

## RSSI Screen

**RSSI** stands for Received Signal Strength Indicator. This screen displays the detected signal strength of each of the four (4) receivers in the base.

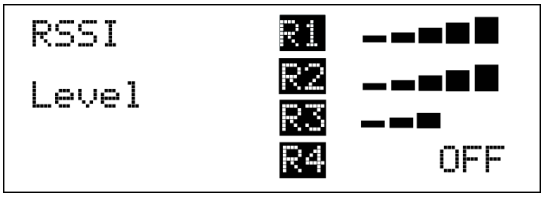


**FIGURE 37.** RSSI Screen

The following are the approximate receive levels indicated by the bars after each receiver.

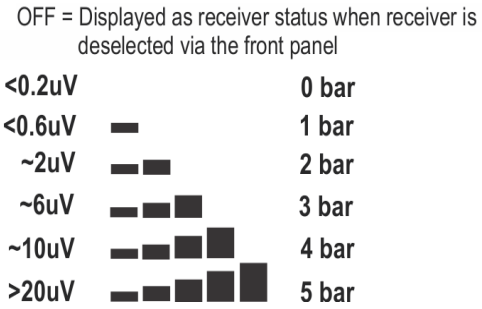


**FIGURE 38.** Receive levels indicated by bars.

If no beltpacks are operating, an RSSI level of two (2) bars or above may indicate interference on that frequency. A different receive channel should be selected.

To **access the RSSI screen**, do the following:

> From the status screen, press and hold **MENU** for two (2) seconds.

To **exit the RSSI screen**, do the following:

> press **MENU** to arrive back at the status screen.

## Group/Channel Select Screen

The group/channel, group/frequency, and frequency edit screens allow the user to set the frequencies of the base station. Each screen has a slightly different way to set frequencies.

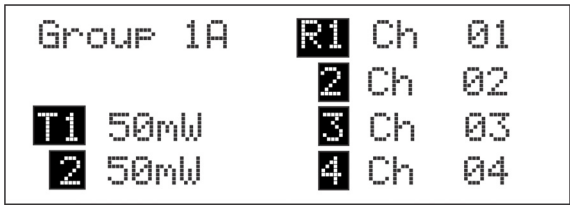


**FIGURE 39.** Group/Channel Screen

The **Group/Channel** screen displays the group number and the channel assigned to each of the four (4) receivers. Each channel is a unique base receive frequency. The frequencies of factory - defined groups 1A to 18 can only be selected from a set number of predetermined channels.

User-defined groups 18u to 30u may be changed by the user to any frequency within range of the base.

### *Group/Channel Screen*

To **select the group and channel**, do the following:

1. From the status screen, press **MENU**.
   *GP_CH select, Base Main, Intercom Settings, and Aux Settings appear in the main selection screen.*
2. Using the UP/DOWN arrow buttons, select **GP_CH Select**.
3. Press **SET**.
   *The Group/Channel Select screen appears. The Group flashes.*
4. Using the UP/DOWN arrows, select a **group**.
5. Press **SET**.
   *The change is accepted and Channel starts to flash.*
6. Using the UP/DOWN arrows, select a **channel**.
7. Press **SET**.
   *The change is accepted and the focus moves to the next receiver. After the last receiver channel is set, the unit changes to the group and channels selected, and then returns to the main screen.*

### *Group/Frequency Screen*

The **Group Frequency** screen displays the group number and frequencies assigned to each of the four (4) receivers. It is just like the Group/Channel screen except the receive channels are displayed as frequencies. Also, the transmit frequencies are displayed.

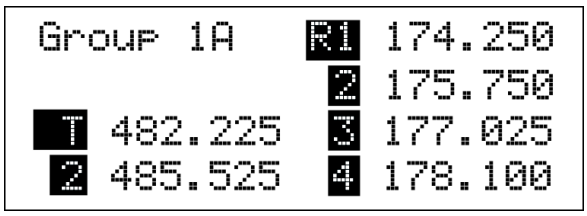


**FIGURE 40.** Group/Frequencies Screen

To **select the group and frequency**, do the following:

1. From the status screen, press **MENU**.
   *GP_CH select, Base Main, Intercom Settings, and Aux Settings appear in the main selection screen.*
2. Using the UP/DOWN arrow buttons, select **GP_CH Select**.
3. Press **MENU** again in the Group/Channel screen.
   *The Group/Frequency Select screen appears. The Group flashes.*
4. Using the UP/DOWN arrows, select a **group**.
5. Press **SET**.
   *The change is accepted and Frequency starts to flash.*
6. Using the UP/DOWN arrows, select a **frequency for the channel**.
7. Press **SET**.
   *The change is accepted and the focus moves to the next frequency. After the last receive frequency is set, the unit displays the group and frequencies selected, and then returns to the main screen.*

### *Frequency Edit (User-Defined Groups Only)*

The **Frequency Edit** screen is similar to the Group Frequency Select screen, but allows the complete editing of each transmit and receive frequency.

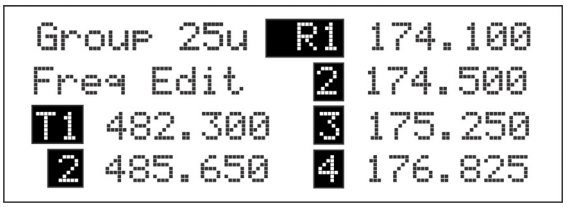


**FIGURE 41.** Frequency Edit Screen

To **edit the frequency screen**, do the following:

1. From the status screen, press **MENU**.
   *GP_CH select, Base Main, Intercom Settings, and Aux Settings appear in the main selection screen.*
2. Using the UP/DOWN arrow buttons, select **GP_CH Select**.
3. Press the **MENU button** twice.
   *The Frequency Edit screen appears. The Group flashes*.
4. Using the UP/DOWN arrow buttons, select a **frequency**.
5. Press **SET**.
   *The changes are accepted and the focus moves to the next transmitter. After transmitter 2 is set, the channel 1 receiver frequency begins to flash*.
6. Using the UP/DOWN arrow buttons, select a **frequency**.
7. Press **SET**.
   *The change is accepted and the focus moves to the next channel. After the last receive channel frequency is set, the unit sets itself to the frequencies and returns to the main selection screen.*

   **NOTE:** Press MENU at anytime and the unit changes to the group and frequencies selected.

## Base Main Settings

Settings contained in the base main menu are the following:

- Local headset microphone gain
- Local headset volume
- Transmit power level
- Squelch setting for each receiver
- Stage Announce (SA) audio level setting
- Receive antenna bias T power
- Base Number...Master or Servant

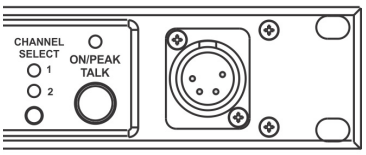


**FIGURE 42.** Local Headset Area of Front Panel

### *TALK Button*

To **enable the audio path from the headset microphone**, do the following:

> Press the **TALK button**.
> *The talk light activates when the TALK button is active.*

This light has two (2) functions:

*Green* - Indicates activation of the TALK button.

*Red or flashing red* - Indicates input audio too strong (Peak)

| Peak Light | Microphone Gain |
|---|---|
| Light flashes on loudest speech | Okay |
| Light flashes on all speech | Too high |
| Light never flashes on normal speech | Too low |

### *Channel Select Button*

The **Channel Select** button selects the intercom channel for the local headset. Each press of the button cycles through the options: intercom one, intercom two, or both, and then back to intercom one (1). The LEDs above the button indicate what channel is currently connected to the local headset.

### *Local Headset Volume and Gain*

The **Local Headset Volume and Microphone Gain** are set in the following software screen.

```
Mic Gain: ▬▬▬▬▬▬
Volume  : ▬▬▬▬▬▬
```

**FIGURE 43.** Microphone Gain/Volume

To **access the microphone gain and volume level**, do the following:

1. From the status screen, press **MENU**.
2. Using the UP/DOWN arrow buttons, select **Base Main**.
3. Using the UP/DOWN arrow buttons, select **Local Headset**.
4. Press **SET**.
   *The microphone gain flashes*.
5. Using the UP/DOWN arrow buttons, adjust the **gain**.

   **NOTE:** Each press of the button is about a 3dB step increase or decrease in gain.

6. Press **SET**.
   *The volume flashes.*
7. Using the UP/DOWN arrows, adjust the **volume**.

   **NOTE:** Each press of the button is about a 3dB step increase or decrease in volume.

8. Press **SET**.
   *The base menu selection menu screen appears.*
9. Press **MENU** twice to go back to the status screen.

   **NOTE:** The base defaults back to the status screen if no action is taken after five (5) minutes.

### *Base Transmitter Power*

The base station has the following transmit power settings for both transmitters:

- Off
- 10mW
- 50mW (Default)
- 100mW
- 249mW

The user may also set which transmitter is on or off. The default is both transmitters on

```
Tx Power:        50mW
   T1: ON  T2: ON
```

**FIGURE 44.** TX Power

To **access the transmit power settings**, do the following:

1. From the main status screen, press **MENU**.
2. Using the UP/DOWN arrow buttons, select **Base Main**.
3. Press **SET**.
4. Using the UP/DOWN arrow buttons, select **TX-Power**.
5. Press **SET**.
   *The transmit power level starts flashing.*
6. Using the UP/DOWN arrow buttons, adjust **the leve**l.
7. When finished, press **SET**.
   *The transmitter's on/off indicators flash.*
8. Using the UP/DOWN arrows buttons, select **ON** or **OFF**.
9. When finished, press **SET**.
   *The Base Main select menu screen appears.*
10. Press **MENU** twice.
    *The base menu select menu screen appears.*

    **NOTE:** The base defaults back to the status screen if no action is taken after five (5) minutes.

### *Squelch Settings*

Each of the four (4) receivers of the base station has four (4) adjustable squelch levels. These levels are equivalent to a SINAD level to open squelch for a receiver. The higher the squelch level number, the quieter the receiver is before it squelches; however, the RF range is slightly less than a receiver with a lower number.

*00 = OPEN (for testing only, do not use)*

*01 = 12dB SINAD*

*02 = 20dB SINAD (Default)*

*03 = 24dB SINAD*

**CAUTION: Do not use Squelch Setting 00!** A squelch level of 00 turns off all squelch gating. This can allow loud white noise into the audio of a base station if no transmitter is on the RF frequency or the portable select button is on. This setting is for test purposes only.

```
Squelch  R1 02
 Level   R2 02
         R3 02
         R4 02
```

**FIGURE 45.** Squelch Setting

To **set the squelch setting**, do the following:

1. From the status screen, press **MENU**.
2. Using the UP/DOWN arrow buttons, select **Base Main**.
3. Press **SET**.
4. Using the UP/DOWN arrow butts, select **Squelch Settings**.

5. Press **SET**.
   *The receiver 1 squelch setting starts flashing.*
6. Using the UP/DOWN arrow buttons, adjust **the setting**.
7. When finished, press **SET**.
8. Repeat **steps six (6) and seven (7)** to set the remaining receivers.
9. When finished, press **SET**.
   *The Base Main selection menu appears.*
10. Press **MENU** twice.
    *The base menu select menu screen appears.*

    **NOTE:** The base defaults back to the status screen if no action is taken after five (5) minutes.

The base employs two (2) different types of squelches. A fast acting noise type squelch and a slower data squelch. For audio to be received by the base, both a good signal-to-noise audio signal (with a noise threshold set via the user squelch settings above) and a valid data stream must be detected.

### *Stage Announce Level*

The **Stage Announce** software option allows the user to adjust the audio output level of the rear panel stage announce jack.

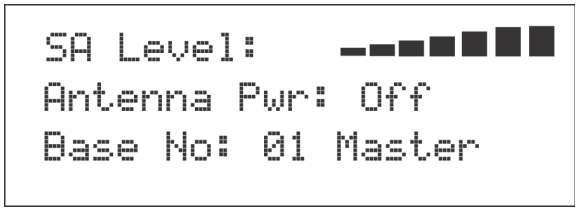


**FIGURE 46.** Stage Announce

To **set the stage announce level**, do the following:

1. From the status screen, press **MENU**.
2. Using the UP/DOWN arrow buttons, select **Base Main**.
3. Press **SET**.
4. Using the UP/DOWN arrow buttons, select **MORE...** .
5. Press the **DOWN arrow button**.
   *The stage announce level flashes.*
6. Using the UP/DOWN arrow buttons, adjust **the setting**.

   **NOTE:** Each press of the button is a 6dB step increase or decrease of volume.
7. When finished, press **SET**.
8. Step through the other settings in the screen by pressing **SET**.
   *After the last option on the screen, the base main selection menu appears.*
9. Press **MENU** twice to go back to the status screen.

   **NOTE:** The base defaults back to the status screen if no action is taken after five (5) minutes.

### *Antenna Power*

**Antenna Power** can be enabled or disabled. If antenna power is enabled, 9VDC is placed on the center pin of the receive antenna. The purpose of this voltage is to power in-line low noise amplifiers on the receive coaxial cable in order to compensate for excessive RF signal loss due to long cable runs.

Specifications of the power on the antenna jack:

| | |
|---|---|
| Options: | On/Off (Off=Default) |
| Voltage: | 9VDC |
| Current: | 100mA max. |
| Protection: | Current is limited to 100mA<br>Base can withstand a continuous short to ground without damage. |

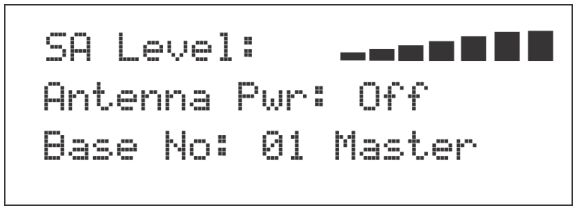


**FIGURE 47.** Antenna Power

To **enable or disable the antenna power**, do the following:

1. From the status screen, press **MENU**.
2. Using the UP/DOWN arrow buttons, select **Base Main**.
3. Press **SET**.
4. Using the UP/DOWN arrow buttons, select **MORE...** .
5. Press the **DOWN arrow button**.
   *The stage announce level starts flashing.*
6. Press **SET** until Antenna Power flashes.
7. Using the UP/DOWN arrows, adjust **the setting**.
8. When finished, press **SET**.
9. Step through the other settings in the screen by pressing **SET**.
   *After the last option on the screen, the base main selection menu appears.*
10. Press **MENU** twice to go back to the status screen.

**NOTE:** The base defaults back to the status screen if no action is taken after five (5) minutes.

### *CAN Bus Number*

The **CAN Bus Number** for a base station must be set only in multiple base station configuration and only if the operator wishes to have the following features shared among multiple base stations:

- First-On-Latch – Out of receiver channels (Push to transmit)
- Automatic beltpack TX power control
- Automatic beltpack user ID assignment
- Beltpack TX and Talk shutdown via the base front panel

Table 1 lists valid base number settings. Please see “Connection of Multiple Base Stations with the Link Cables” on page 40.

**TABLE 1.** Valid Base Number Settings

| Base Number | Function |
|---|---|
| 01 | Master |
| 02 | Servant |
| 03 | Servant |
| 04 | Servant |
| 05 | Servant |
| 06 | Servant |
| 07 | Servant |
| 08 | Servant |
| 09 | Unassigned (Default) |

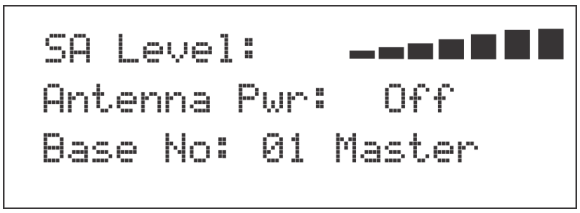


**FIGURE 48.** Base Number

To **set the CAN bus number**, do the following:

1. From the status screen press **MENU**.
2. Using the UP/DOWN arrow buttons select **More...**
3. Press the **DOWN arrow button**.
4. Press **SET** until the Base Number option flashes.
5. Using the UP/DOWN arrow buttons, set **the number**.
6. When finished, press **SET**.
7. Step through the other settings in the screen by pressing **SET**.
   *After the last option on the screen, the base main selection menu appears.*
8. Press **MENU** twice to go back to the status screen.

**NOTE:** The base defaults back to the status screen if no action is taken after five (5) minutes.

### *Intercom Settings*

There are multiple parameters to set in the Intercom Setting menu:

- 2-wire intercom type: Telex, RTS, Clear-Com, Off
- Only intercom 1 active, only intercom 2 active, both
- 2-wire intercom input/output levels
- 4-wire intercom on/off
- 4-wire intercom input/output levels

### *2-Wire Intercom*

The screens below show the progression of setting 2-wire parameters.

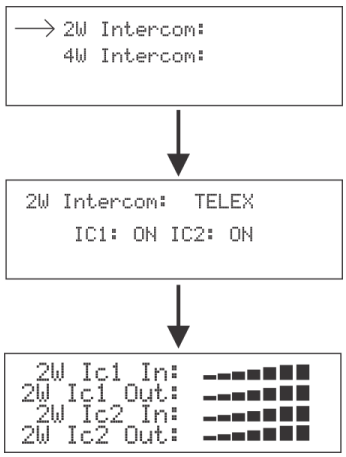


**FIGURE 49.** 2-Wire Intercoms

To **adjust the 2-wire intercom settings**, do the following:

1. From the status screen, press the **MENU** button.
2. Using the UP/DOWN arrow buttons, select **Intercom Settings**.
3. Press **SET**.
4. Using the UP /DOWN arrow buttons, select **2-W**.
5. Press **SET**.
   *The 2-wire intercom type flashes.*
6. Using the UP/DOWN arrow buttons, set the **intercom type**.
7. When finished, press **SET**.
   *The intercom channel flashes.*

   **NOTE:** If off is selected, the 2-W/4-W menu options appear.
8. Using the UP/DOWN arrow buttons, select the **intercom setup**–intercom 1, intercom 2, or both.
9. Press **SET**.
   *The intercom input level flashes.*
10. Using the UP/DOWN arrow buttons, select the **input level**.
11. When finished, press **SET**.
12. Proceed through the **intercom settings**.
    *Once finished, the screen display returns to the 2-W/4-W selection menu.*
13. Press **MENU** twice to go back to the status screen.

    **NOTE:** The base defaults back to the status screen if no action is taken after five (5) minutes.

### *4-Wire Intercom*

The screens below show the progression of setting 4-wire parameters.

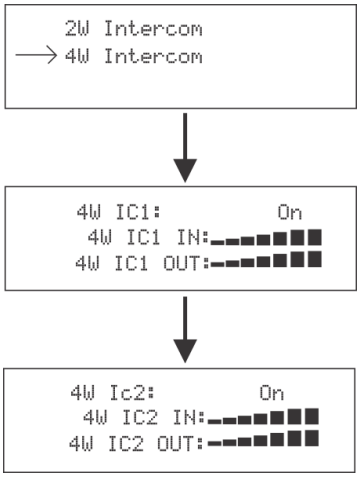


**FIGURE 50.** 4-Wire Intercoms

To **adjust the 4-wire intercom settings**, do the following:

1. From the status screen, press the **MENU** button.
2. Using the UP/DOWN arrow buttons, select **Intercom Settings**.
3. Press **SET**.
4. Using the UP /DOWN arrow buttons, select **4-W**.
5. Press **SET**.
   *The intercom one 4-wire on/off selection flashes.*
6. Using the UP/DOWN arrow buttons, select **on or off**.
7. When finished, press **SET**.
   *The intercom input level flashes.*

   **NOTE:** If off is selected, the screen skips to the intercom two screen.
8. Using the UP/DOWN arrow buttons, select the **intercom setup**–intercom 1, intercom 2, or both.
9. Press **SET**.
   *The intercom input level flashes.*
10. Using the UP/DOWN arrow buttons, select the **input level**.
11. When finished, press **SET**.
12. Proceed through the **intercom output settings** in a similar manner.
    *Once finished, the intercom two 4-wire on/off selection flashes.*
13. Repeat **steps 6-12** for intercom two.
    *Once finished, the screen display returns to the 2-W/4-W selection menu.*
14. Press **MENU** twice to return to the status screen.

    **NOTE:** The base defaults back to the status screen if no action is taken after five (5) minutes.

### *Auxiliary Settings*

The parameters to configure in the auxiliary setting menu are as follows:

- Intercom 1 Auxiliary mode: *Local, Global,* or *Off*
- Intercom 2 Auxiliary mode: *Local, Global,* or *Off*
- Auxiliary input/output levels

The auxiliary setting for Local, Global, and Off are defined as the following:

*Local* Any audio placed into the auxiliary input port is routed only to the base's local headset and beltpack(s). Any audio heard out of the auxiliary output port is only from the base's local headset and beltpack(s).

*Global* Any audio placed into the auxiliary input port is routed not only to the base's local headset and beltpack, but also to any wired 2-wire or 4-wire system connected to the base station. Any audio heard from the auxiliary output is not only from the base's local headset and beltpack, but also from any wired 2-wire or 4-wire system connected to the base station.

*Off* The auxiliary input and output for the intercom channels is disabled.

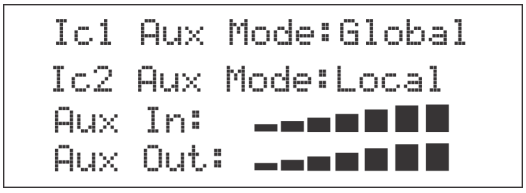


**FIGURE 51.** Auxiliary Input/Output

To **configure the auxiliary settings**, do the following:

1. From the status screen, press the **MENU** button.
2. Using the UP/DOWN arrow buttons, select **Aux Settings**.
3. Press **SET**.
   *The Intercom 1 auxiliary local, global, or off selections start flashing.*
4. Using the UP/DOWN arrow buttons, select **the option** you desire.
5. When finished, press **SET**.
6. Repeat **steps 1 through 5** for Intercom 2.
7. When finished, press **SET**.
   *The auxiliary input level flashes.This level is applied to both intercom channels.*
8. Using the UP/DOWN arrow buttons, set the **input level**.
9. When finished, press **SET**.
   *The auxiliary output level flashes.*
10. Using the UP/DOWN arrow buttons, set the **output level.**
11. When finished, press **SET**.
12. Press **MENU** twice to go back to the status screen.

**NOTE:** The base defaults back to the status screen if no action is taken after five (5) minutes.

### *ClearScan*

When **ClearScan** activates, the base shuts down its transmitters and begins scanning receive frequencies. The frequencies scanned are those in its factory-defined groups and any user-defined groups with at least one (1) frequency defined. The result is a screen like the one shown in Figure 52. The scan groups appear in order from the highest number of clear receive channels available to the least number of clear channels available.

To **start ClearScan**, do the following:

> Press and hold **MENU + SET** for three (3) seconds.

**NOTE:** This process can take up to 24 seconds to complete. It depends on how many user-defined groups are configured. The more groups, the longer the scan takes.

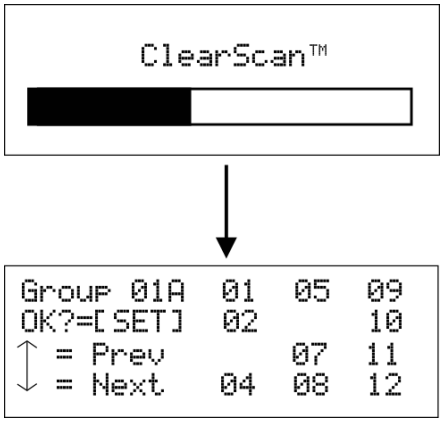


**FIGURE 52.** Clear Scan Results Screen

**NOTE:** The base is not set to the displayed ClearScan result if the user presses the MENU button to abort.

### *Lockout*

**Lockout** is used to keep a user from changing any options at the base station, except local headset microphone gain and volume.

To **enable Lockout**, do the following:

> Press and hold **UP+DOWN** for two (2) seconds to lock or unlock the base station.
> *A padlock appears on the status screen if the base is locked out.*

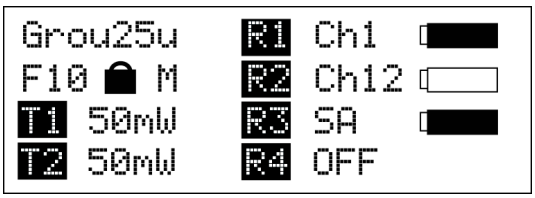


**FIGURE 53.** Status Screen with Lockout Active

### *Copy*

**Copy** allows the user to select a factory-defined group and copy it to a user-programmed group. This allows a user to edit the group if desired.

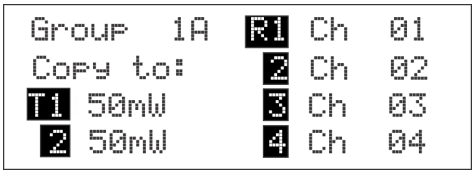


**FIGURE 54.** Copy Screen

To **use Copy**, do the following:

> Press and hold the **SET+DOWN** buttons for 2 seconds in the group/channel select screen (see Figure 54).

### *1st Use Defaults*

**1st Use Default**s is used to set the base station to Group 01A, channels 1, 2, 3, 4, and RETAIN any user-defined groups in memory. It sets the unit to factory-defined parameters.

To **set the base station to 1st Use Defaults**, do the following:

1. Press and hold the **MENU** button while turning on the base station.
2. When Factory Setup displays on the screen, release **MENU**.

### *Factory Default*

**Factory Default** is used to set the base station to Group 01A, channels 1, 2, 3, 4, and ERASES any user-defined groups in memory. it sets the unit to factory-defined parameters.

To **set the base station to Factory Default**, do the following:

> Press and hold **MENU + SET + UP+ DOWN** for two (2) seconds.
> *The screen in Figure 55 displays before the unit reboots*.

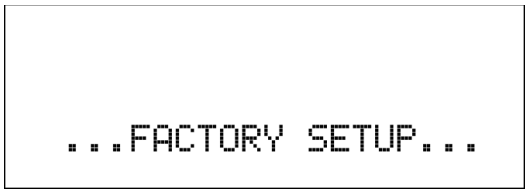


**FIGURE 55.** FACTORY SETUP Display

## Connection of Multiple Base Stations with the Link Cables

This section discusses various configurations of multiple base stations using link cables. Multiple base stations may be connected via standard 2-wire and 4-wire intercoms without additional link cables between them. They still transmit and receive intercom 1 and intercom 2 audio normally from the beltpacks.

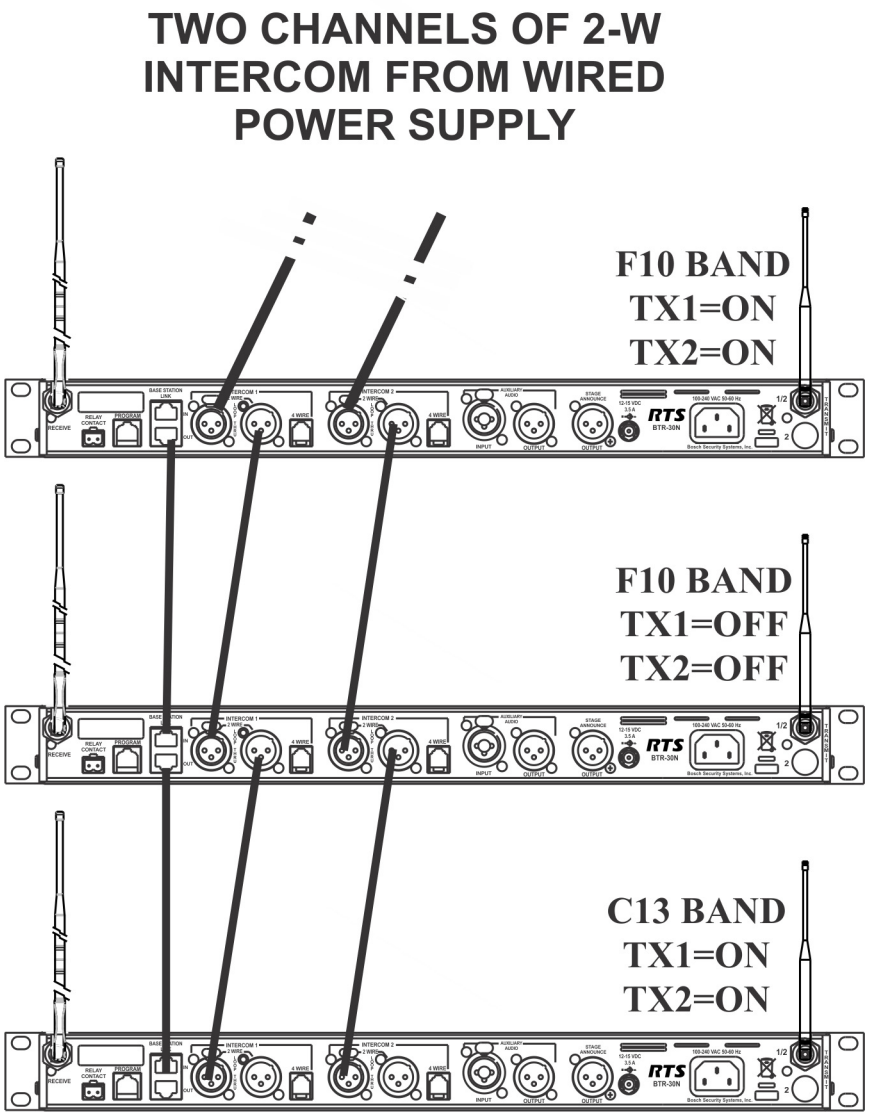


**FIGURE 56.** Multiple base stations with only 2-wire intercom channels 1 and 2 connected between them

However, by connecting multiple bases together via link cables, in addition to any 2-wire or 4-wire audio connections in use, the feature set of a single base becomes available to the whole system. This feature set also includes base stations that have their transmitters off in order to conserve RF spectrum.

These features are:

- (WTA) Wireless talk-around channels 1 and 2 shared between base stations.
- First-On-Latch-Out of beltpacks extended to base stations with their TXs off (when beltpacks are in push-to-transmit mode).
- Automatic beltpack TX power control extended to base station with their TXs off.
- Automatic beltpack user ID assignment extending to base stations with their TXs off.
- Beltpack TX and Talk shutdown via the base front panel extended to base stations with their TXs off (when beltpacks are in push-to-transmit mode).
- Beltpack Talk shutdown via the base front panel extended to base stations with their TXs off (when beltpacks are in push-to-talk mode).

Before presenting the configurations, we believe an explanation of RF data links plus master and servant base stations helps in understanding the multiple base arrangements.

## Over-the-Air Data Links

There are two (2) RF data communication links within a BTR-30N system.

- Beltpack-to-base conveys:
  - Current button(s) selected
  - Battery level
  - Beltpack ID set confirmation
- Base-to-beltpack conveys
  - Beltpack User ID
  - Beltpack TX power level
  - Beltpack TX and/or Talk Shutdown
  - First-On-Latch-Out

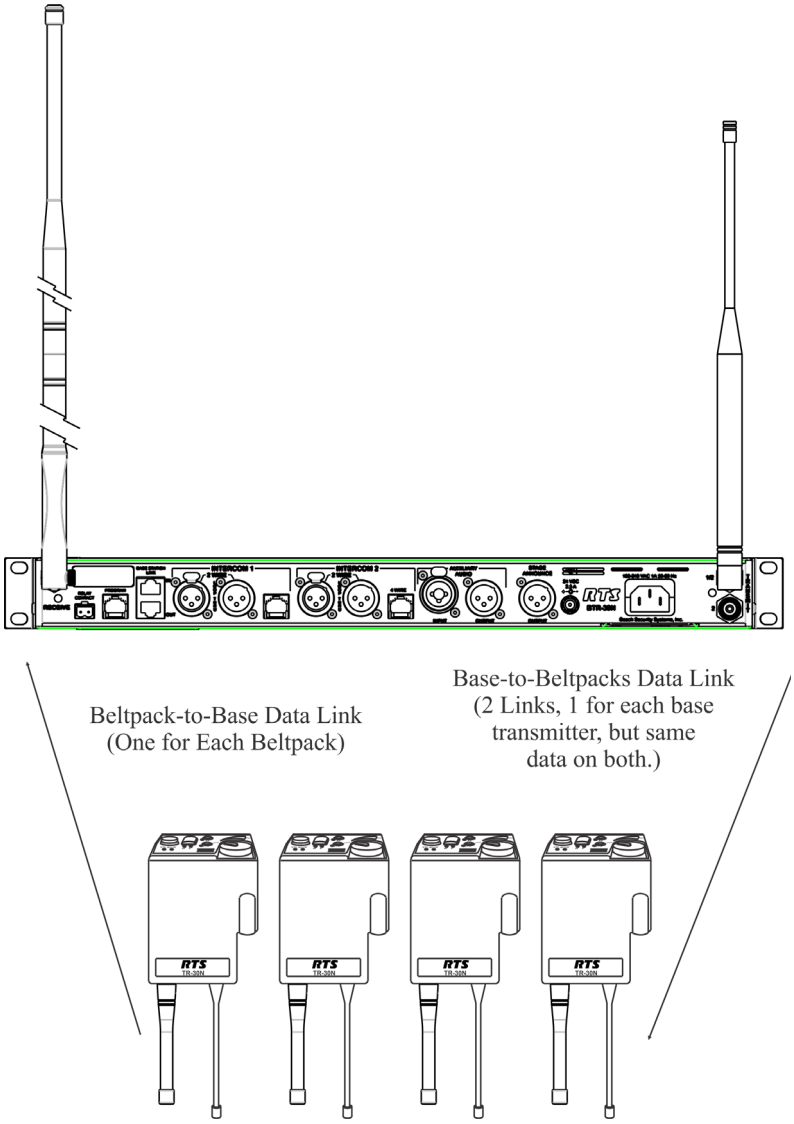


**FIGURE 57.** Base-To-Beltpack and Beltpack-To-Base RF Data Links

These two (2) data paths are intact when there is only one (1) base communicating to beltpacks. They are also intact when many base stations on different TX and RX frequencies are communicating to their beltpacks.

However, in a system with one (1) or more base stations with their transmitters off, the base-to-beltpack data link is lost for those beltpacks

A wired data link is needed to communicate the base-to-beltpack information from the base stations with their transmitters off to the base with its transmitters on.

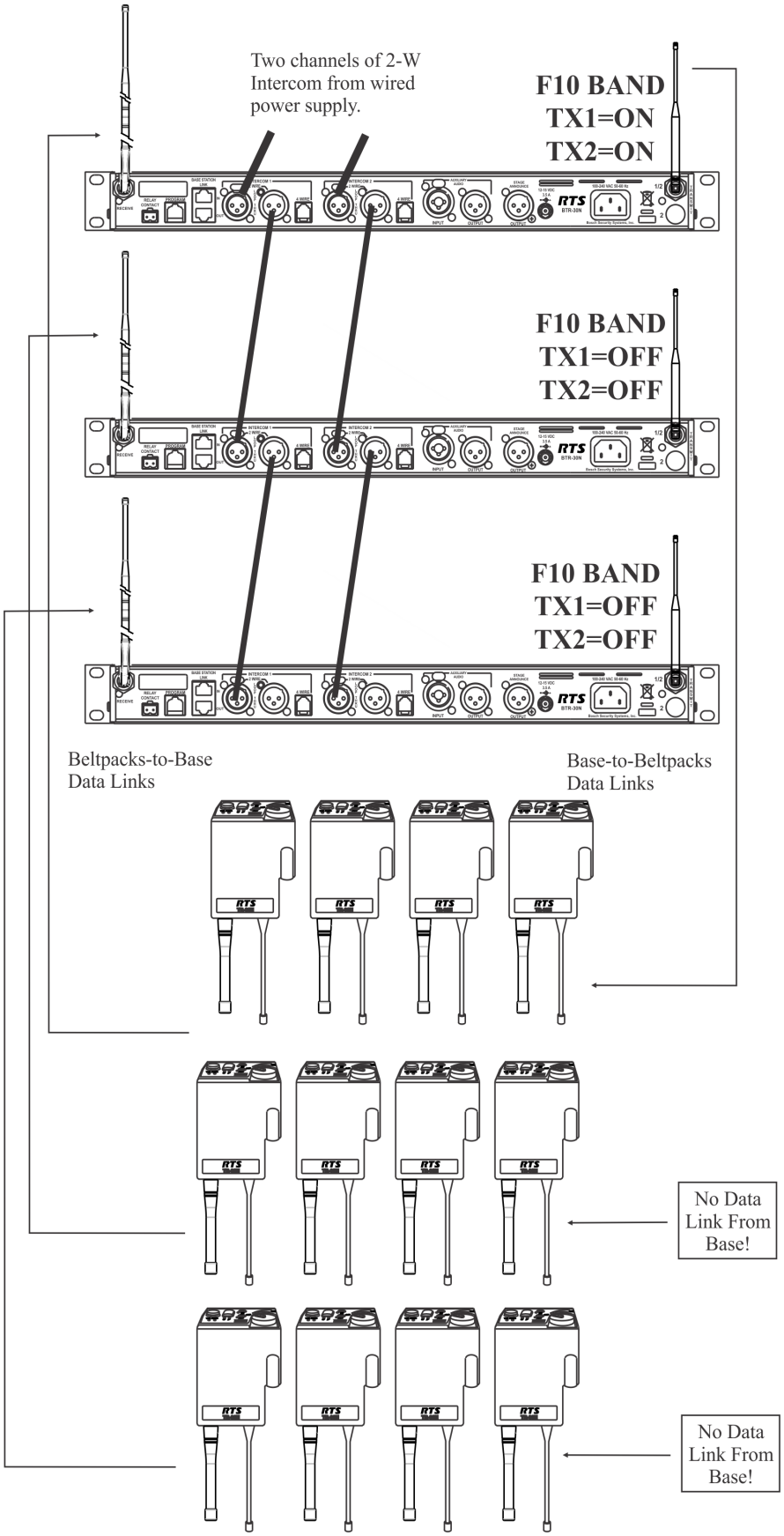


**FIGURE 58.** Three (3) base stations connected via 2-wire intercom only
Two (2) bases have their transmitter off; one has its transmitters on

## Master and Servant Base Stations

A master base station is one that the user has set its base number to 01(Master) and has its transmitters on. A master base conveys base-to-beltpack data to its beltpacks and via a base station link cable, relays the base-to-beltpack data from

base stations that have their base transmitters off. A master may support up to seven (7) additional base stations with their transmitters off.

**IMPORTANT:** There can be only one (1) master base station in a network of base stations.

A master base automatically sets a 09 (default) base to a unique 02 to 08 servant number. If a base is already a servant the master leaves it at that same number.

**TABLE 2.** Valid Base Number Settings

| Base Number | Function |
|---|---|
| 01 | Master |
| 02 | Servant |
| 03 | Servant |
| 04 | Servant |
| 05 | Servant |
| 06 | Servant |
| 07 | Servant |
| 08 | Servant |
| 09 | Unassigned (Default) |

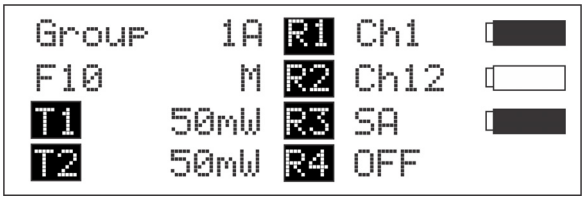


**FIGURE 59.** Status screen of a master designated base station

**NOTE:** Any time base stations are changed to be a master base station, it must be power cycled for the change to take affect.

A servant base station is one that has its transmitters off and is connected to a master base. Since servant base stations have their transmitters off, base-to-beltpack information can only get to beltpacks via link cables connected to a master base station.

There can be up to seven (7) servants working with one (1) master.

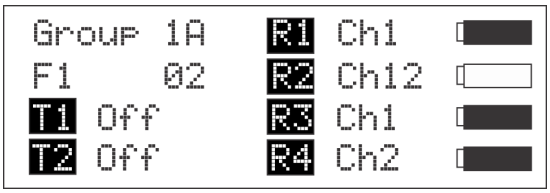


**FIGURE 60.** Status Screen of the Servant Base Station

A servant or master base is set via the Base Main menu screen in the base station.

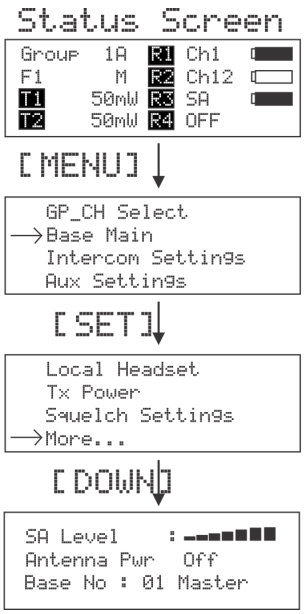


**FIGURE 61.** How to get to the master/servant selection screen

From the factory, base station are set to base number 09. This is an unassigned base. The base can be left as 09 if not in a linked system. It works as normal with all features.

If the unassigned base is connected to a master base station, the master automatically assign a valid, unique, servant ID to it the first time the networked system is powered-up.

The master base must always power-up after the servant bases in order to detect servant units to control. If all the units are on a common power strip, this is controlled by a built in delay on master base station. The master base station always boots slower than servant units.

## CAN bus

A **CAN** (Controlled Area Network) bus is the data protocol used over the BTR-30N's base station link cable. This balanced protocol is a robust standard used the world over in high noise, extreme environments. It requires the use of 120 Ohm terminators at the beginning and end of a CAN bus network.

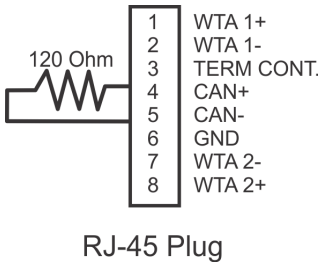


**FIGURE 62.** CAN Bus 120 Ohm termination (CAN-T) and base pin functions.

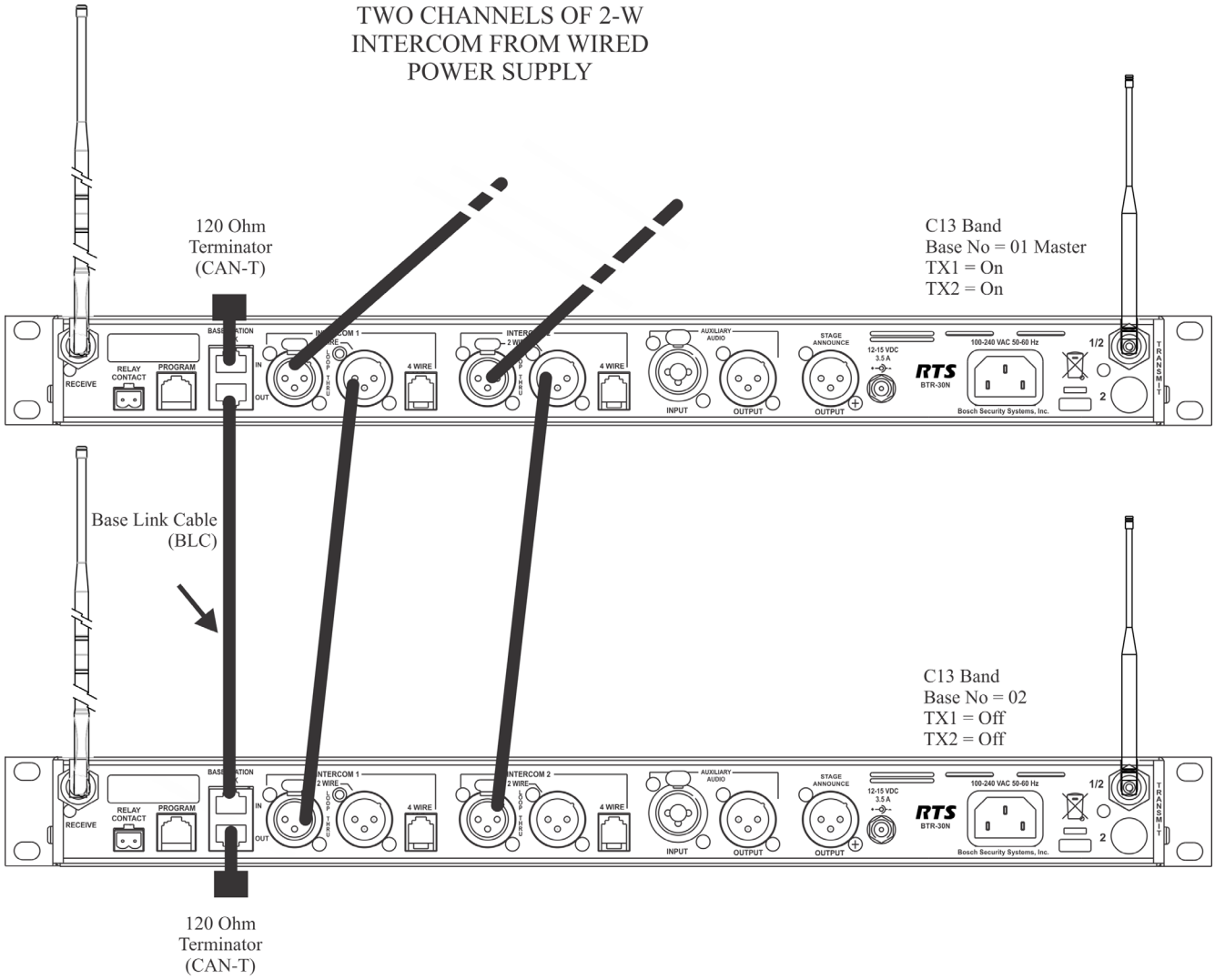


**FIGURE 63.** A base link cable connected system with terminators on both ends

***Base Station Link Configurations***

Multiple base station networks may be connected in different ways. Using the rear panel base station link jacks, a user has three (3) different connection options.

These options are:

- WTA (Wireless Talk-Around) Audio Only
  - Bases connected via 2-wire and/or 4-wire audio links
  - All bases share WTA audio
  - They do NOT share CAN bus data
- WTA and a SINGLE CAN Bus Network
  - Bases connected via 2-wire and/or 4-wire audio links
  - All bases share WTA audio
  - All bases are ON A SINGLE CAN BUS NETWORK
- WTA and Several CAN Bus Networks
  - Bases connected via 2-wire and/or 4-wire audio links
  - All bases share WTA audio
  - There is MORE THAN ONE CAN BUS NETWORK

## Wireless Talk-Around Audio Only

These base stations are connected to share WTA channel 1 and WTA channel 2 audio but do not share the CAN bus data.

### *Link Overview*

WTA 1 and WTA 2 in the BTR-30N are two (2) independent 2-wire intercom channels. The WTA intercom channels are very similar to AudioCom types of intercom channels except they are dry and are meant to only pass audio between BTR-30N base stations.

Up to 16 base stations may be connected together with base link cables (BLC) depending on cable length and conductor size. The BLC passes both channels of WTA audio. It also passes a logic level so the 1st base station in the chain is the only one that provides a termination of the WTA intercom channels. This pin is labeled “TERM CONT” on the RJ-45 plug pinouts in this section.

Care must be taken to connect cables between base stations from the OUT of base one (1) to the IN of base two (2) and so forth, unit to unit.

If the WTA link cable passes from OUT to OUT or IN to IN, the WTA audio terminates in multiple places and causes the WTA audio levels to be greatly reduced/distorted.

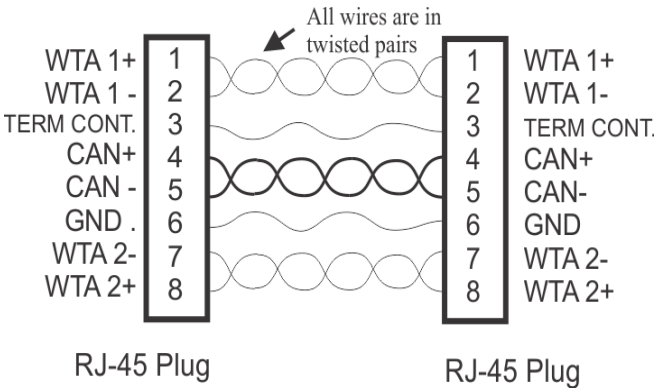


**FIGURE 64.** BLC (Base Link Cable) and pin functions. (Not Supplied)

If base stations are farther apart than the 12” (30.48cm) BLC, then 568-A or 568-B Ethernet cables of CAT-5E or above may be used to connect base stations up to 300 feet apart. These Ethernet cables contain four (4) twisted pairs like the BLC cable.

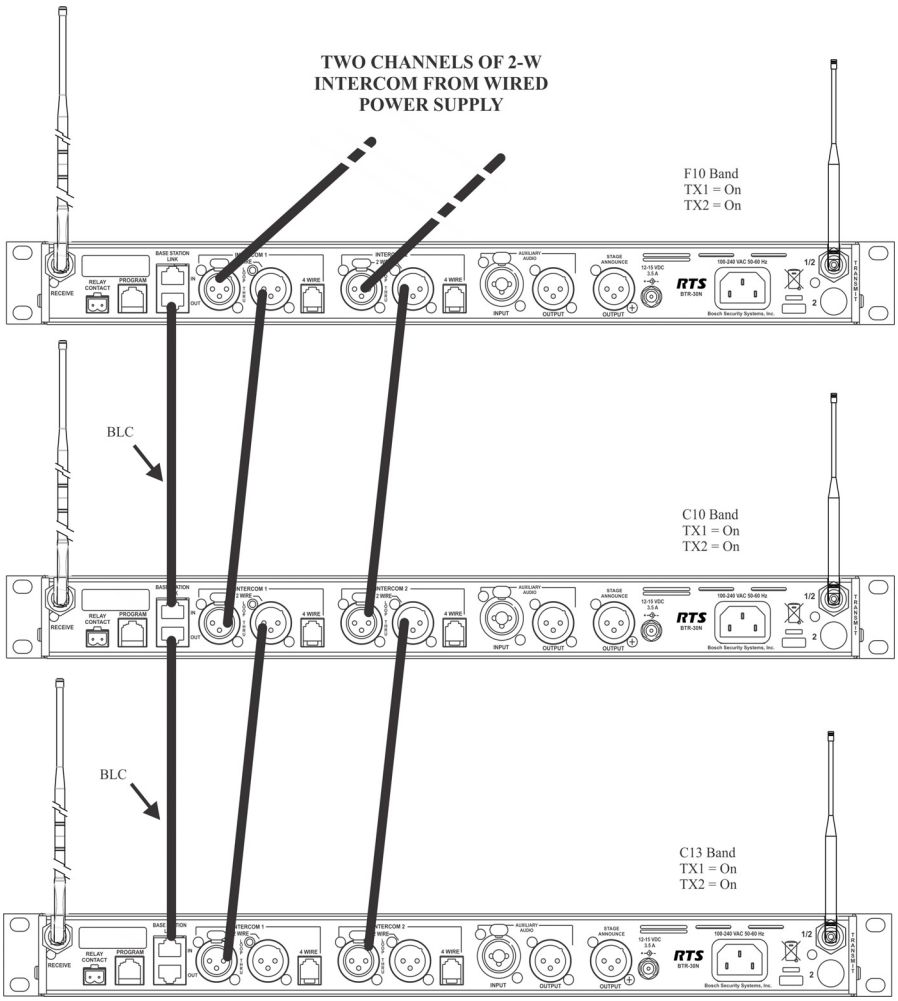


**FIGURE 65.** Multiple base stations connected via 2-wire audio cable and WTA through via BLCs

Do not set base stations to the base number 01 (Master), because CAN bus is connected to the other base stations with a BLC, as seen in Figure 65. If there are no masters on the CAN bus system, there is no activity on the CAN bus line and no need for terminations.

**IMPORTANT:** The **master base must always power-up after the servant bases** in order to detect servant units to control. If all units are on a common power strip, this is controlled by a built in delay on the master base station. The master base station always boots slower than servant units.

***Setup***

1. Connect the **power cords** to the base stations.

   **IMPORTANT:** *Do not* power up the base stations.

2. Connect the **transmit and receive antennas** to the base stations.

   **NOTE:** The color dots on the rear of the base should match the color rings of the antennas.

3. Connect the **main intercom audio channel(s) to the base stations**.

   **NOTE:** This may be 2-wire intercom. This could also be 4-wire intercom via a matrix type wired system.

4. Connect the **Base Link Cable** between base stations.

   **NOTE:** Verify the OUT of the first base station connects to the IN of second base station and follow the same connection pattern forward.

5. Power-up **all the base stations**.

   **NOTE:** The base stations should be set to all unique transmit and receive frequencies.

6. Setup via the BTR-30N software menus the **intercom, local headset, auxiliary, stage announce, etc.** as detailed in BTR-30N Operation.

   **NOTE:** All the base station numbers should be left as 09 (default).

7. Turn on **only one (1) beltpack**.

   **NOTE:** Try to keep the beltpack at least 6’ (2 meters) away from the base’s antennas.

8. Set the beltpack on the **appropriate group and channel** for its base station.
   *As each beltpack is set to its group and channel, an hourglass symbol appears on the base display in the location normally occupied by the battery symbol. A beltpack is assigned an ID number by the base in this time. Finally, a normal battery symbol is displayed, indicated the beltpack has been assigned its ID number.*

9. Once the beltpack has an ID number, turn the **beltpack** off.

10. Turn on the **next beltpack.**

11. Repeat **steps 8-9** for each additional beltpack.

12. Power up the **beltpacks**.

## WTA and a SINGLE CAN Bus Network

These base stations connect via 2-wire and/or 4-wire audio links and also by the Base Link Cable (BLC). The BLC cable passes WTA audio and CAN bus data information. The CAN bus connected base stations form a Network.

***Link Overview***

There are two (2) RF data communication links with a BTR-30N system. The beltpack-to-base links convey information such as current button(s) selected, battery level, etc. The base-to-beltpack links convey beltpack user ID, beltpack TX shutdown, beltpack talk shutdown, and other information.

The two (2) paths are intact when there is only one (1) base communicating to beltpacks and when many base stations on different TX and RX frequencies communicate to the beltpacks. However, when one (1) or more base stations with their transmitters off are connected to a base station with its transmitters on, the base-to-beltpack data link is lost for those beltpacks.

Care must be taken to connect cables between base stations from the Out of base one (1) to the IN of base two (2) and so forth.If the WTA link cable is passed from OUT to OUT or IN to IN, the WTA audio terminates in multiple places and causes the WTA levels to be greatly reduced/distorted.

**IMPORTANT:** The **master base must always power-up after the servant bases** in order to detect servant units to control. If all units are on a common power strip, this is controlled by a built in delay on the master base station. The master base station always boots slower than servant units.

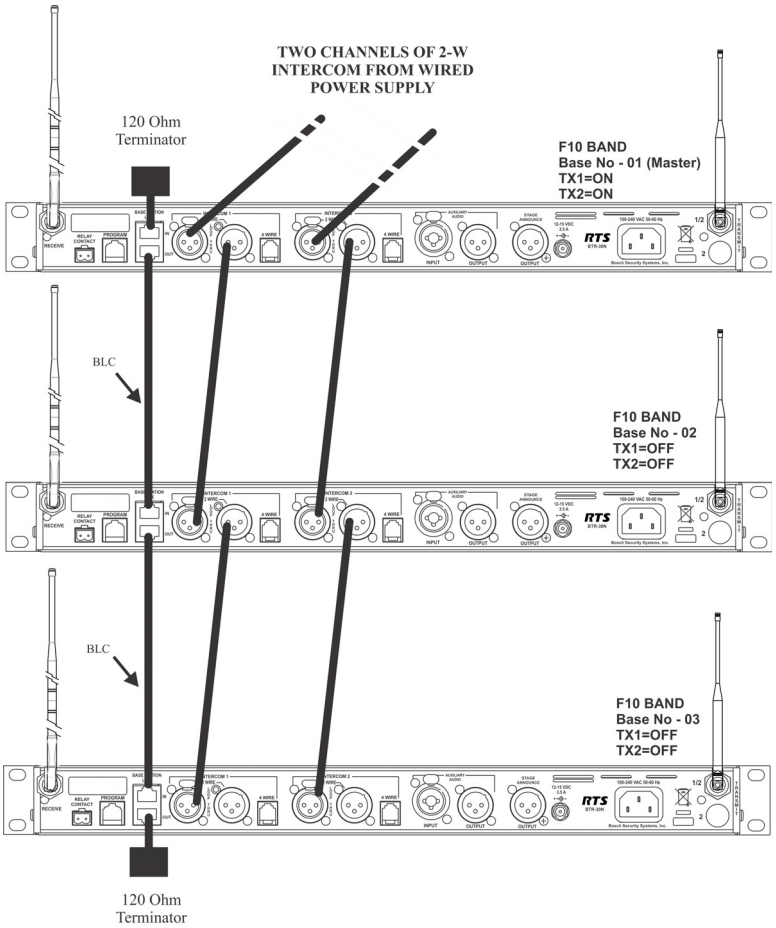


**FIGURE 66.** Multiple base stations connected via 2-wire audio cable and WTA plus CAN through via BLCs

***Setup***

1. Connect the **power cords** to the base stations.

   **IMPORTANT:** *Do not* power up the base stations.

2. Connect the **transmit and receive antennas** to the base stations.

   **NOTE:** The color dots on the rear of the base should match the color rings of the antennas.

3. Connect the **main intercom audio channel(s)** to the base stations.

   **NOTE:** This may be 2-wire intercom. This could also be 4-wire intercom via a matrix type wired system.

4. Connect the **Base Link Cable** between base stations.

   **NOTE:** Verify the OUT of the first base station connects to the IN of second base station and follow the same connection pattern forward.

5. Place **CAN bus termination plugs (CAN-T)** at the beginning and end of the networked base stations.
6. Power-up **all base stations**.
7. Set all base stations to factory defaults via a four-button reset; **MENU + SET + UP + DOWN**.
8. Power-down **all the base stations.**
9. Power-up **the first servant base station**.
10. Set the **servant base station** to all unique receive frequencies.
    *The transmitters switch off automatically when the master base station takes control of them.*

    **NOTE:** Leave the base number at the default of 09.

11. Setup via the BTR-30N software menus the **intercom, local headset, auxiliary, stage announce, etc.** as detailed in BTR-30N Operation.

    **NOTE:** Leave the base station powered-up.

12. Power-up **the master base station**.
13. Set **the master base station** to all unique transmit frequencies.
14. Setup via the BTR-30N software menus the **intercoms, local headset, auxiliary, stage announce, etc.**, as detailed in BTR-30N Operation.
15. Set **the master base station** with its transmitters on to master base number 01.

16. Cycle **the power of the master base** while leaving the single servant base powered-up.
*The master base, on boot, takes control of the servant base and assign it the base ID of 02 and turn its transmitters off.*
17. If there are additional servant base stations to configure, turn off the **master base station**.
18. Power-up **the next servant base station**.
19. Repeat **steps 10-12 and 16-18** for each additional servant base.

**NOTE:**

- Always leave the previously assigned servant base stations powered-up when going on to the next base.
- The **master base must always power up after the servant bases** in order to detect servant units to control.
- If all the units are on a common power strip, this is controlled by a built in delay in the master station. The master station always boots slower than servant units.

20. Repeat **steps 9-19** for each additional network.
21. Turn on **only one (1) beltpack**.

**NOTE:** Try to keep the beltpack at least 6' (2 meters) away from the base's antennas.

22. Set **the beltpack** on the appropriate group and channel for its base station.
*As each beltpack is set to its group and channel, an hourglass symbol appears on the base display in the location normally occupied by the battery symbol. A beltpack is assigned an ID number by the base in this time. Finally, a normal battery symbol displays, indicating the beltpack has been assigned its ID number.*
23. Once the beltpack has an ID number, turn the **beltpack** off.
24. Turn on the **next beltpack**.
25. Repeat **steps 22-23** for each additional beltpack.
26. Power up the **beltpacks**.

## WTA and Several CAN Bus Networks

These base stations may be connected via 2-wire and/or 4-wire audio links. They are also connected together via the Base Link Cable (BLC) and a new cable called the CAN Bus Termination Cable (CTC).

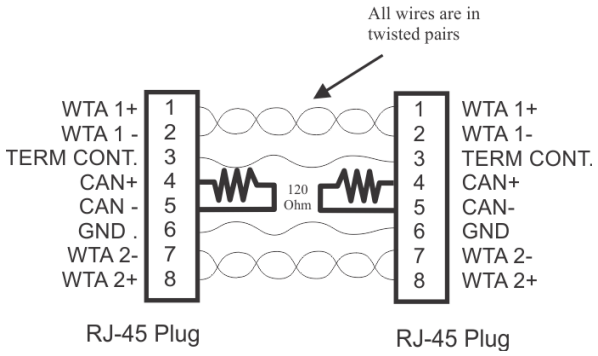


**FIGURE 67.** CAN Bus Termination Cable (CTC). (Not Supplied)

### *Link Overview*

Multiple masters on the same CAN bus are not allowed. The two different cables solve this issue. The BLC passes WTA audio and CAN bus data information. The CTC passes WTA audio and also functions to terminate the CAN network on either side of it. This allows many separate CAN networks to share the same two (2) WTA audio channels.

Care must be taken to connect cables between base stations from the OUT of base one (1) to the IN of base two (2) and so forth, unit to unit. If the WTA link cable passes from OUT to OUT or IN to IN, the WTA link cable terminates in multiple places and cause the WTA audio levels to be greatly reduced/ distorted.

The **master base must always power-up after the servant bases** in order to detect servant units to control. If all units are on a common power strip, this is controlled by a built in delay in the master base station. The master base station always boots slower than servant units.

### *Setup*

Setup is the same as the previous "WTA and a SINGLE CAN Bus Network" section, with the exception of a CTC cable between the two CAN networks.

1. Connect the **power cords** to the base stations.

**IMPORTANT:** *Do not* power up the base stations.

2. Connect the **transmit and receive antennas** to the base stations.

**NOTE:** The color dots on the rear of the base should match the color rings of the antennas.

3. Connect the **main intercom audio channel(s) to the base stations**.

   **NOTE:**

   - This may be 2-wire intercom. This could also be 4-wire intercom via a matrix type wired system.
   - If using a party line to connect audio channels, the party line needs to be terminated by a connected PSU or a load XLR plug (P.N. TP-3 or TP-3R). See Figure 68.

4. Connect the **(BLC) Base Link Cable** between base stations within a CAN network.

   **NOTE:** Verify the OUT of the first base station connects to the IN of second base station and follow the same connection pattern forward.

5. Connect the **CAN Bus Termination Cable (CTC)** BETWEEN the CAN networks.

   **NOTE:** Remember to connect from the OUT of the base station to the IN of the next base station.

6. Place **CAN bus termination plugs (CAN-T)** at the beginning and end of the networked base stations.
7. Power-up **all base stations**.
8. Set all base stations to factory defaults via a four-button reset; **MENU + SET + UP + DOWN**.
9. Power-down **all the base stations**.
10. For the first network of base stations, power-up **the first servant base station**.
11. Set **the servant base station** to all unique frequencies. *The transmitters switches OFF automatically when the master base takes control of them.*

    **NOTE:** Leave the base number at the default of 09.

12. Setup via the BTR-30N software menus the **intercoms, local headset, auxiliary, stage announce, etc.**, as detailed in BTR-30N Operation.

    **NOTE:** Leave the servant base station powered-up.

13. Power-up **the master base station**.
14. Set **the master base station** to all unique transmit and receive frequencies.
15. Setup via the BTR-30N software menus the **intercoms, local headset, auxiliary, stage announce, etc.**, as detailed in BTR-30N Operation.
16. Set **the master base station** with its transmitters on to the master base number 01.
17. Cycle **the power of the master base,** while leaving the single servant base powered-up.
    *The master base, on boot, takes control of the servant base and assign it the base ID of 02 and turn its transmitters off.*
18. If there are additional servant base stations to configure, turn off the **master base station**.
19. Power-up **the next servant base station**.
20. Repeat **steps 11-13 and 17-18** for each additional servant base.
    *Always leave the previously assigned servant base stations powered-up when going on to the next base.*

| | |
|---|---|
| **IMPORTANT:** | The **master base must always power-up after the servant bases** in order to detect servant units to control. If all units are on a common power strip, this is controlled by a built in delay in the master base station. The master base station always boots slower than servant units. |

21. Repeat **steps 10-20** for each additional network.
22. Turn on **only one (1) beltpack** on the first network system.
    *Try to keep the beltpack at least 6' (2 meters) away from the base's antennas.*
23. Set the **beltpack** on the appropriate group and channel for its base station.
    *As each beltpack is set to its group and channel, an hourglass symbol appears on the base display in the location normally occupied by the battery symbol. A beltpack is assigned an ID number by the base in this time. Finally, a normal battery symbol displays, indicating the beltpack has been assigned its ID number.*
24. Once this first beltpack has an ID number, turn off the **beltpack**.
25. Turn on **the next beltpack**.
26. Repeat **steps 23-24** for each additional beltpack.
27. Power up the **beltpacks**.

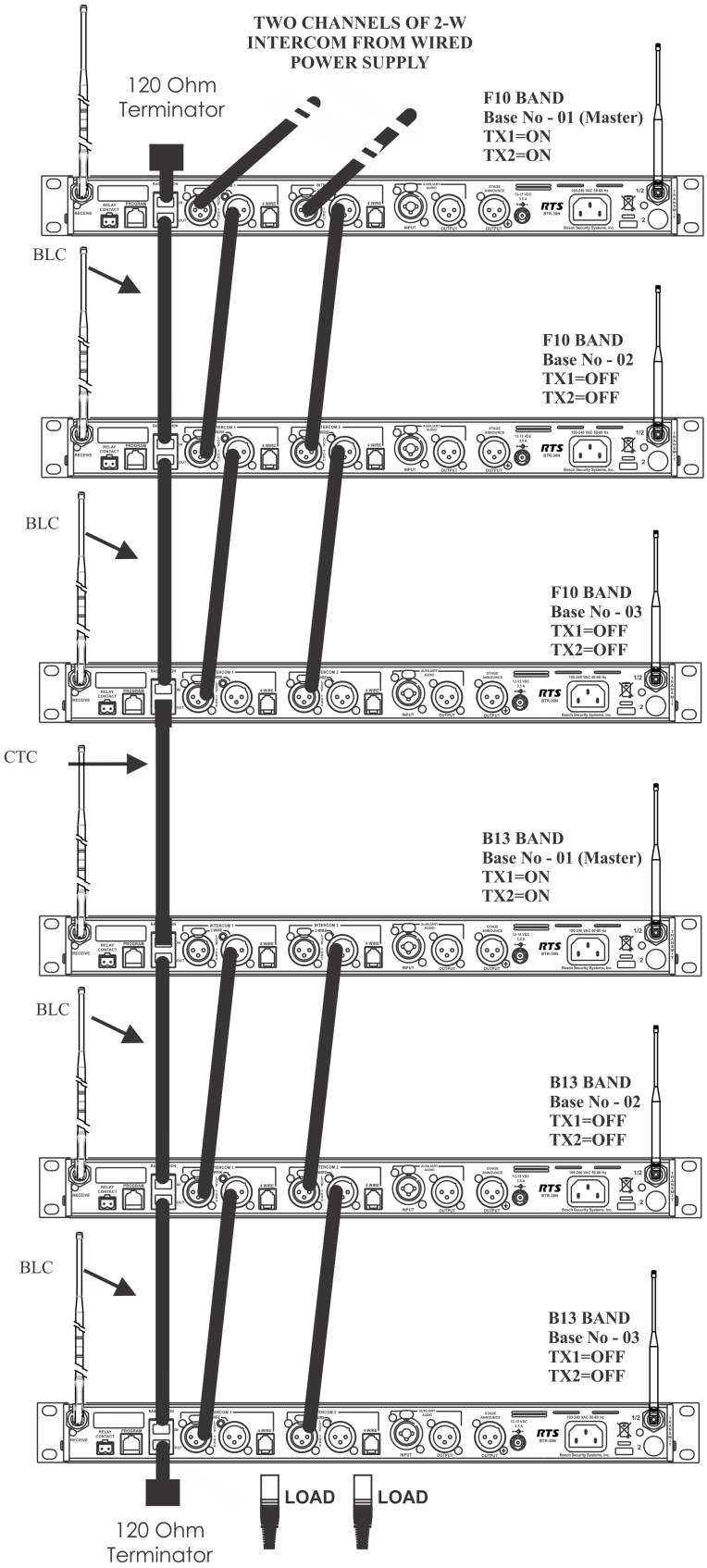


**FIGURE 68.** Multiple base stations connected via 2-wire audio cable and two CAN Bus networks.

## *TR-30N/32N*

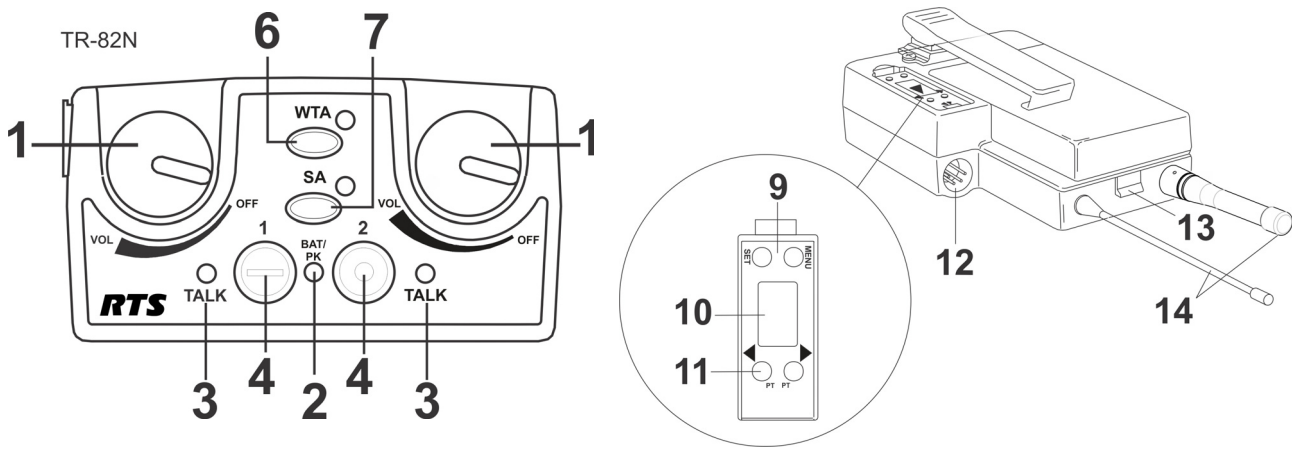


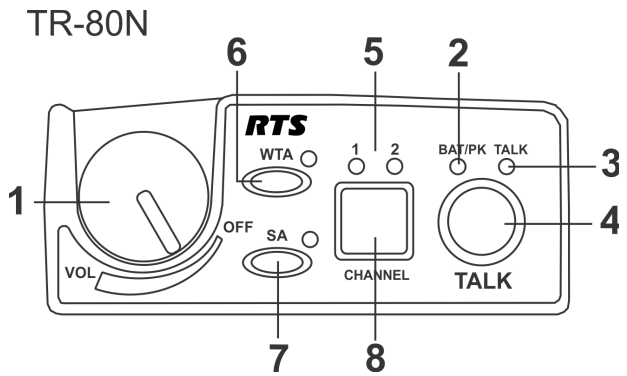


1. On/Off & Volume Control
2. BAT/PK Light
3. Talk Light
4. TALK Button
5. Channel 1 & 2 Lights
6. Wireless Talk-Around (WTA)
7. Stage Announce (SA)
8. Audio Channel Select
9. MENU and SET Buttons
10. LCD Display
11. UP and DOWN Buttons
12. Headset Connector
13. Battery Latch
14. Receive & Transmit Antenna

**FIGURE 69.** Controls and Connections

### Basic Operational Description

The TR-30N/32N is a full-duplex (simultaneous talk and listen) beltpack. It works in conjunction with a BTR-30N base station. The beltpack allows a user, via a headset attached to the beltpack, to communicate with other wireless or wired users. Other base stations and/or wired systems connect to the beltpack's base station. The base station allows the audio path interconnections for the beltpack audio.

The TALK, WTA (wireless talk-around), and SA (stage announce) buttons on a beltpack turn the beltpack's microphone input on or off. They also select the audio paths for the beltpack's audio in the base.

### System Quick Start

The following is a list to quickly get a base station and beltpacks operating.

1. Unpack **the base**.
2. Connect **the power cord and antennas** to the base.
3. Connect **the base** to audio interfaces, such as: 2-wire, 4-wire, SA, Auxiliary, or local headset.
4. Press and hold **the MENU button**, while powering-up the base station.
5. When the base station displays...FACTORY SETUP..., release **the MENU button**.
6. Press and hold **the MENU button**, while powering-up the beltpack(s).
7. On the base station, use the UP and DOWN arrow buttons to change **the channel** to an unoccupied receive channel.
8. Press **SET** twice to set channel and group.
   *The base should now display the audio channel of the beltpack and a battery symbol appears shortly.*
9. Plug a **headset** into each beltpack.
10. Adjust the **software menu** for microphone gain so the over modulation light flashes only on some of the words at normal speech levels.

## Battery Installation

**Ensure the On/Off volume control knob is turned off**. Press down and hold down the battery release latch, then slide the battery pack about 1/8 inch back toward the latch until it stops. Lift the battery pack out. Replace batteries as follows:

1. Open the **battery pack** by inserting fingernail and lifting

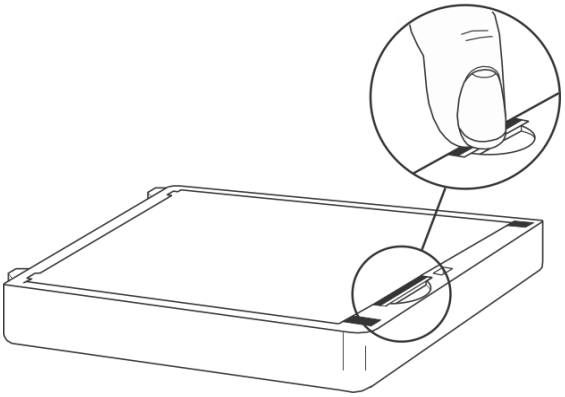

2. Pull **battery strap** to remove low or dead batteries.

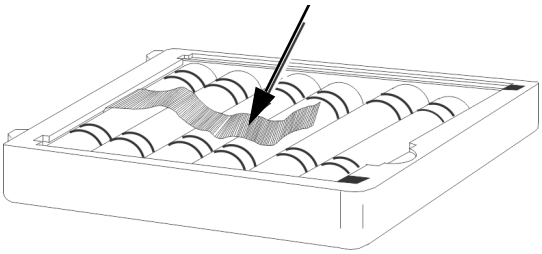

3. Load **new batteries** following the polarity shown in the battery case.

**NOTE:**

- Start loading at the end of the case where the strap is attached to the case.
- Be sure strap goes under batteries.

4. Tuck end of strap under door when placing the battery cover back on the case.

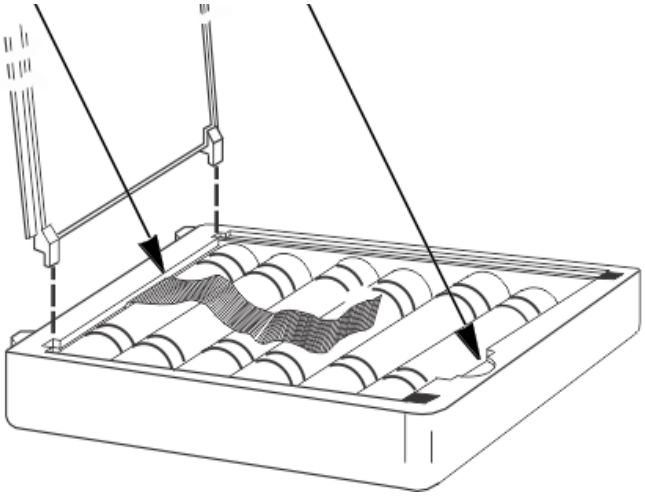

**WARNING:**
Do not place an alkaline TR battery pack in any battery charger. Severe charger and battery pack damage may result.

**FIGURE 70.** Battery Installation

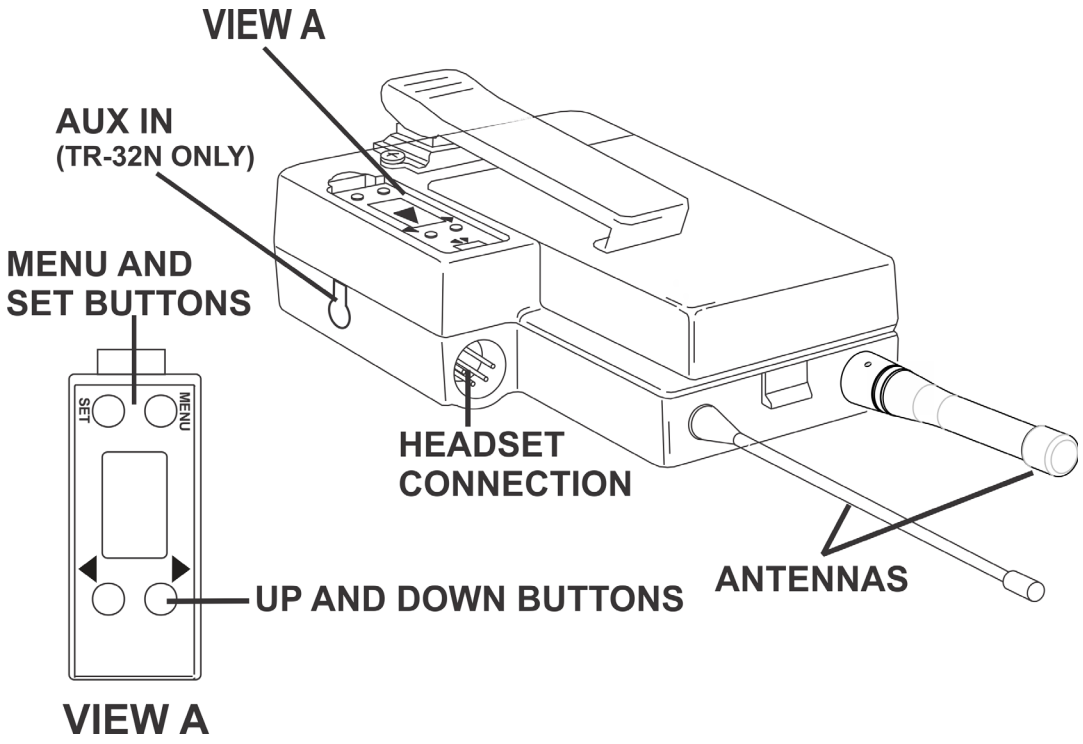


**FIGURE 71.**
TR-30N/32N Controls

## Headset Connection

The Headset Connector is a XLR type connector. Four (4) or five (5) pin headset connectors may be installed in the unit. See the TR-30N/32N Controls and Connectors section for more information on the pinouts. A dynamic or electret headset microphone is automatically detected by the beltpack and a bias voltage supplied if needed.

## Sidetone

**Sidetone** is the amount of the user's voice fed back to their headphone. The sidetone level in the beltpack and base station is fixed. It cannot be adjusted.

## Antenna Connection

The beltpack comes with two detachable, screw type 1/4 wave antennas. Attach the two (2) antennas by screwing the antennas into the receptacles at the bottom of the beltpack. The color dot on the screw end of the antenna must match the color dot on the antenna receptacle.

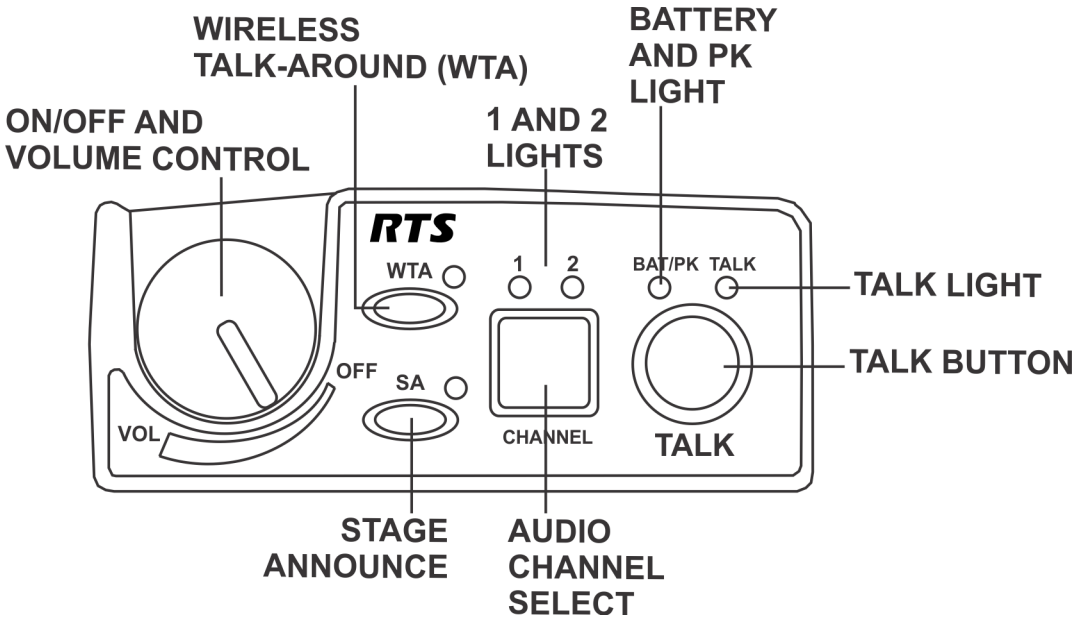


**FIGURE 72.**
TR-30N Top Panel Controls

## On/Off and Volume Control

To **turn the beltpack power on**, do the following:

> Rotate the **On/Off Volume Control knob(s)** CW.

To **adjust the volume to the headset**, do the following:

> Rotate the **On/Off Volume Control knob** as required for a comfortable listening volume.

| | **Batt/PK LED Status** | |
|---|---|---|
| **Battery** | Light flashes on power up | =Battery OK |
| | Light on continuously | =Battery Low |
| | Light does not flash/power on | =Battery Dead |
| | | |
| **Over modulation** | Light flashes on some speech | =Gain OK |
| | Light flashes on all speech | =Gain too high |
| | Light never flashes on speech | =Gain too low |

## TALK Button

To **enable the audio path from the headset microphone**, do the following:

> Press the **TALK button**.
> *The talk light activates when the TALK button is active.The TALK button has three (3) software selectable modes that can be seen via the LCD display of the beltpack.*

To **select the TALK button mode**, do the following:

1. Press and hold **SET** while pressing the **TALK button**.
   *The current mode of the TALK button displays the first time the TALK button is hit. Pressing the TALK button a second time changes the mode of the button.*
2. Release **SET** to accept the currently displayed setting.

| | | |
|---|---|---|
| Selectable Modes: TALK | tb off | Talk disabled |
| | tb Ptt | Push-to-talk |
| | tb LAt | Push-to-latch |

## Audio Channel Select Button

To **select which intercom system the headset connects to**, do the following:

1. Press and hold **SET** while pressing the **CHANNEL select button**.
   *The current mode of the CHANNEL select button displays the first time the button is hit. Pressing the button a second time changes the mode of the button.*
2. Release **SET** to accept the currently displayed setting.

| | | |
|---|---|---|
| Selectable Modes: Audio CHANNEL Button | 12 on | Channels 1 and 2 available |
| | 1 on | Only channel 1 |
| | 2 on | Only channel 2 |

## Stage Announce (SA)

To **route audio from the beltpack directly to the stage announce connector on the back of the base station**, do the following:

> Press the **SA button**.
> *The base station's SA relay is also closed. The beltpack sidetone is lost as an indication that stage announce is activated. The other beltpacks and wired users do not hear this beltpack's audio when SA is pressed. The button is non-latching and activates the nearby red LED when pressed.*

To **enable or disable Stage Announce**, do the following:

1. Press and hold **SET** while pressing the **SA button**.
   *The current mode of the SA button displays.*
2. Still holding **SET**, press the **SA button** again to turn SA on or off.
3. Release **SET** to accept the displayed setting.

## Wireless Talk Around (WTA)

To **disconnect the beltpack audio from the wired intercom, auxiliary input/output, and the base station's local headset**, do the following:

> Press the **WTA button**.
> *Other beltpack users on that audio channel can hear the user as normal. The WTA button activates the nearby red LED as well as the appropriate talk LED when pressed.*

To **enable or disable Wireless Talk-Around options**, do the following:

1. Press and hold **SET** while pressing the **WTA butto**n.
   *The current WTA mode displays. Pressing WTA a second time changes modes. Available options are: Off, On, and Lon (Latch on).*
2. Release **SET** to accept the displayed setting.

## Groups and Channels

The first LCD screen the beltpack displays is the Group/ Channel screen. This screen shows the currently selected receive group followed by the beltpack transmit channels.

To **edit groups and channels**, do the following:

1. Push **SET** to edit the transmit channel.
   *The channel number flashes.*
2. Using the UP/DOWN arrow buttons, select **the desired transmit channel**.
3. Push **SET** to accept the channel.
   *The receive group flashes.*
4. Using the UP/DOWN arrow buttons, select **the desired receive group**.
5. Push **SET** to accept the receive group.
   *The new group containing the selected channel is now set.*

**NOTE:**

- To escape out of the editing without any changes, Press MENU.
- Factory group frequencies cannot be changed. User group frequencies (Group 19u to 30u) can be changed.

## Transmit Frequency

The **Transmit Frequency** screen displays the beltpack transmitter frequency in MHz. The frequency is not changeable in factory-determined groups, but it is changeable in user-defined groups.

To **edit the TX frequency (User Groups Only)**, do the following:

1. Set **the unit** to the desired user-defined group and channels.
   *See Groups and Channels Instructions. The menu structure in Figure 73 indicates how to get to the transmit frequency screen.*
2. Push **SET** to edit the TX frequency.
   *The frequency flashes.*
3. Using the UP/DOWN arrow buttons, select the **desired frequency**.
   *The frequency can be changed in 25 kHz steps.*
4. Push **SET** to place the unit on the new transmit frequency.

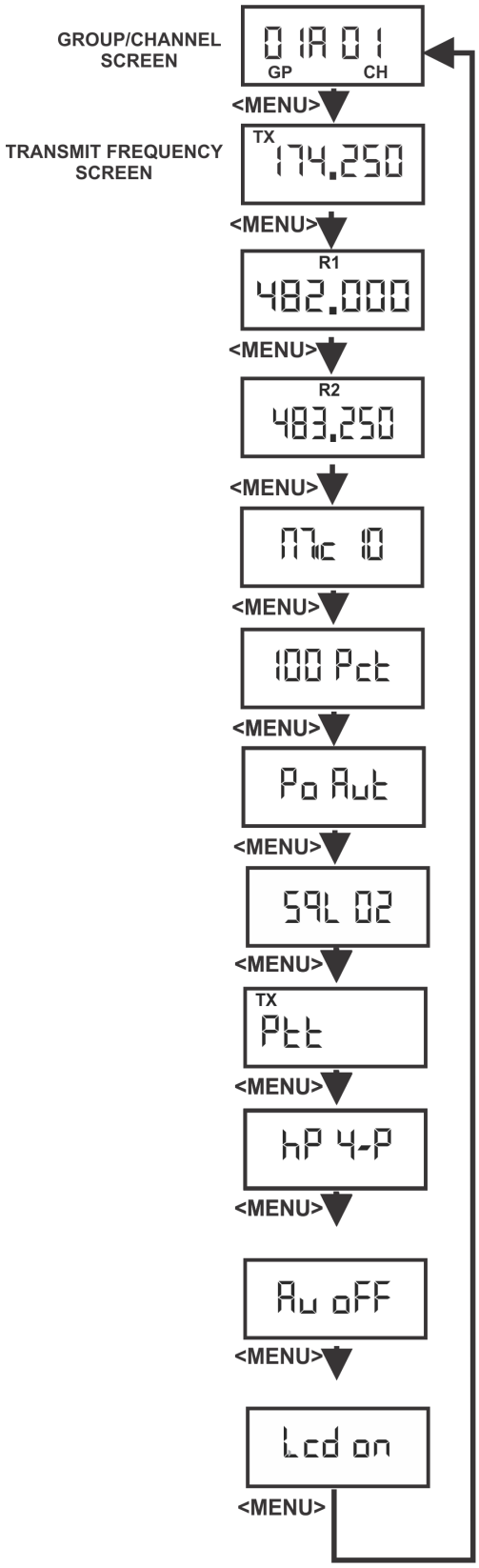


**FIGURE 73.**
Group/Channel & Transmit Frequency Screen

## Receive Frequency

The **Receive Frequency** screen displays the beltpack receiver frequencies in MHz. The frequency cannot be changed in factory-defined groups, but can be changed in user-defined groups.

To **edit the RX frequency (User Groups Only)**, do the following:

1. Set the **unit** to the desired user-defined group and channels. *See Groups and Channels Instructions. The menu structure in Figure 74 indicates how to get to the receive frequency screen.*
2. Push **SET** to edit the RX frequency. *The frequency flashes.*
3. Using the UP/DOWN arrow buttons**,** select the **desired frequency**. T*he frequency can be changed in 25 kHz steps.*
4. Push **SET** to place the unit on the new receive frequency.

## Microphone Gain

The **Microphone Gain** screen displays the beltpack microphone gain setting. There are 16 possible settings. The number zero (0) indicates minimum microphone gain, the number 15 is maximum. Each step is about three (3) dB.

To **adjust the microphone gain**, do the following:

1. Push **SET** at the microphone gain screen. *The number flashes.*
2. Using the UP/DOWN arrow buttons, select the **desired gain**.
3. Push **SET** to place the unit at the indicated microphone gain.

## Battery Display

The **Battery Display** screen indicates the current percentage of battery remaining.

Battery Percentages

100 Pct. = Fresh Battery
75 Pct. = 75% Life Left
50 Pct. = 50% Life Left
25 Pct. = 25% Life Left
10 Pct. = 10% Life Left. Low Battery Light
0 Pct. = Battery Dead. Unit will lose communication at any time

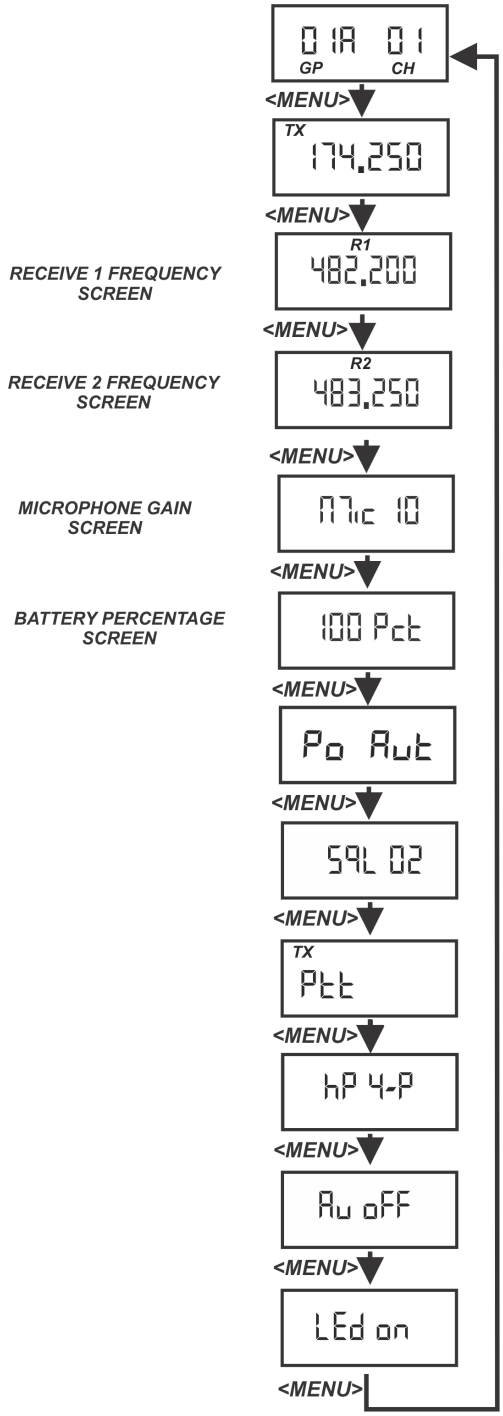


**FIGURE 74.** Receive Frequencies Microphone Gain/Battery Percentages Screen

## Low Battery Alert Tone

The beltpack sends an audio alert tone to the headset if battery life reaches 10%. The 1 kHz tone is heard for 0.5 seconds, every 30 seconds. The tone is only heard and set at the beltpack.

To **set the low battery alert tone**, do the following:

1. Press **SET** at the battery percentage screen.
   *A screen appears displaying* `Lbt oFF`.
   *The low battery tone option also flashes*

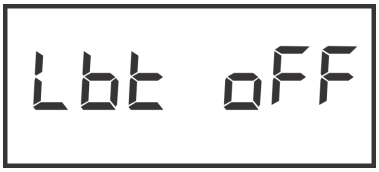


2. Using the UP/DOWN arrow buttons, turn the **low battery tone option** on or off.
3. Press **SET** to accept the change.
   *The screen now displays with AL or ni flashing.*

4. Using the UP/DOWN arrow buttons, select **AL or ni** for Alkaline/NiMH battery gauge calibration.
5. Press **SET** to return to the battery gauge screen.

## Transmit Power

The **Transmit Power** screen displays the current setting of the beltpack transmitter's output power level. There are four (4) settings.

### Transmit Power Settings

| | |
|---|---|
| Auto (Default) | The beltpack's transmitter adjusts its output level according to information sent to the beltpack from the base station. It adjusts between two levels: 10 mW or 50 mW. |
| 10 | The beltpack transmits at 10 mW |
| 50 | The transmitter is at 50 mW |

When the unit is set to auto, base station information tells the beltpack the appropriate power settings to use based upon the received signal strength level at the base station. By reducing the transmit power when possible, the battery life of the beltpack can be slightly extended and intermodulation products can be reduced.

## Changing the Transmit Power Setting

To **change the transmit power setting**, do the following:

1. Push SET at the transmit power screen.
2. Using the UP/DOWN arrow buttons, select the power setting.
3. Push SET to place the unit at the indicated setting.

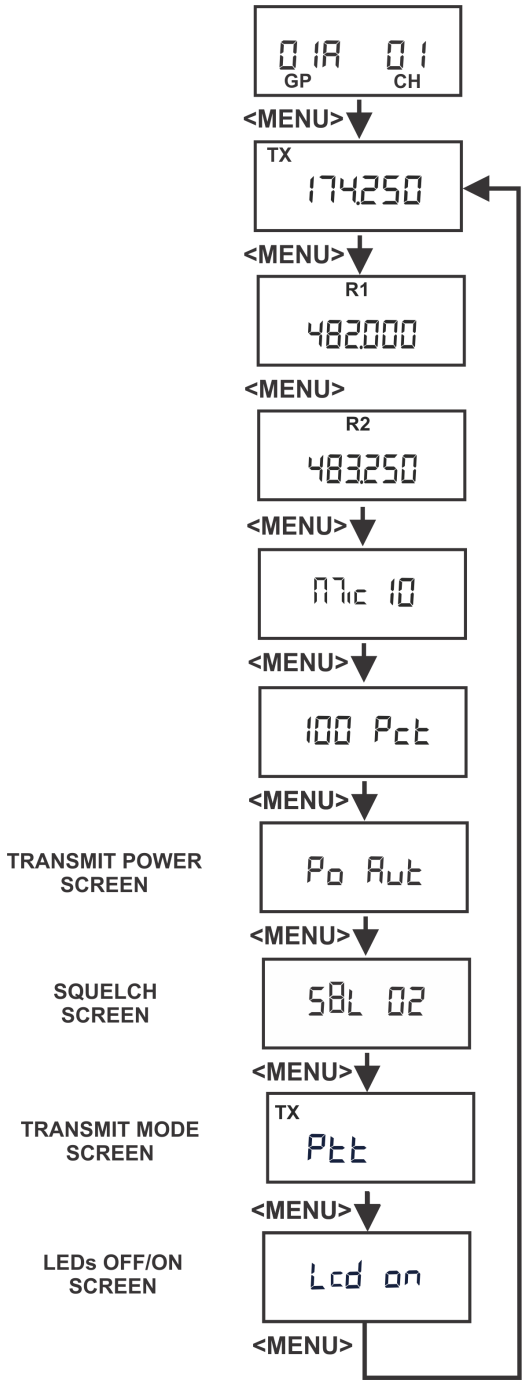


**FIGURE 75.**
Transmit Power, Squelch, Push-to-Talk/Push-to-Transmit Screen

## Squelch Screen

The **Squelch** screen allows the user to adjust the beltpack squelch level.

To **select the beltpack squelch level**, do the following:

1. Push **SET** at the squelch screen.
   *The squelch setting flashes.*
2. Using the UP/DOWN arrow buttons**,** select the **squelch setting**.
   *A setting of 00 holds the squelch open for testing.*

**WARNING:** Do not set the squelch to 00 while wearing headphones with the volume turned up. White noise with no signal can be uncomfortably loud.

*3. Push **SET** to save the new squelch setting.*

| Squelch Lvl | Approx. SINAD | Notes |
|---|---|---|
| 00 | NA | Open |
| 01 | 12 | |
| 02 | 20 | Default |
| 03 | 24 | |
| 04 | NA | RSSI Lvl Squelch |

**NOTE:** The beltpack employs two (2) different types of squelches. A fast acting noise-type squelch and a slower data squelch. For audio to be received by the beltpack, both a good signal-to-noise audio signal (with a noise threshold set via the user squelch settings above) and a valid data stream must be detected.

## Transmit Mode Screen

The **Transmit Mode** screen is used to select the following modes:

| Transmit Mode | Description |
|---|---|
| Stt | Push-to-Talk. The transmitter is always on. Pressing the TALK button un-mutes the audio. The beltpack responds to the base audio mute commands.<br>When a user disables the beltpack Portable Station Connect button, the beltpack TALK button turns off. |
| St tu | Push-to-Transmit. The transmitter is off and audio muted until the TALK button is on. The beltpack will ignore lockout or shutdown commands from the base. |
| St tuo | Push-to-Transmit Lockout Enabled. The transmitter is off and audio muted until the TALK button is on. The beltpack will respond to lockout commands from the base, such as First-On-Latch Out and Portable Station Connect disable. |
| St tuq | Push-to-Transmit Lockout Enabled but no busy tone. This mode is the same as Pt trL but no “busy” tone heard in beltpack if channel is occupied. |

To **change the transmit mode setting**, do the following:

1. Push **SET** at the transmit mode screen.
   *The screen flashes.*
2. Using the UP/DOWN arrow buttons, select the **transmit mode**.
3. Push **SET** to save the mode change.

## LEDs Off/On

The LED off/on screen is used to disable all LEDs. This function is useful for users who do not wish to show LEDs in the dark.

To **turn LEDs on or off**, do the following:

1. Push **SET** at the LED off/on screen.
2. Using the UP/DOWN arrow buttons, select the **desired mode**.
3. Push **SET** to save the mode change.

## Software Version/Band

The software revision and frequency band of the beltpack may be displayed from any of the main beltpack screens.

To **view the software revision and frequency band**, do the following:

> In any of the beltpack main screens, press and hold **DOWN** for two (2) seconds.

- The first screen indicates the frequency band of the beltpack.
- The second screen indicates the software revision.

After displaying the information, the screen reverts back to the main screen.

The screens below indicate an A10 band beltpack with 303004 version software.

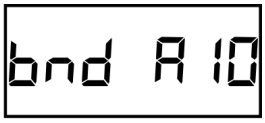

## ClearScan™

ClearScan™ helps you find clear RF frequencies in your area. The beltpack's receiver scans all the factory-defined groups and any set user-defined groups. The result is a list of beltpack receive groups, clear of interference.

To **enter ClearScan™** do the following:

1. Press and hold **MENU + SET** for two (2) seconds to start ClearScan™.
   *The beltpack display changes to ClrScn and the GP icon flashes. After about 12 seconds, the beltpack displays the first clear group. The group number flashes.*
2. Using the UP/DOWN buttons, display **clear groups**.
3. Press **SET** to select a group.
4. Press **MENU** to bail out without selecting a group.

Clear groups are displayed first. They are in group order. You can scroll down through groups using the DOWN button. The left-half of the screen gives you an indication of interference levels as you scroll through the groups.

User-defined groups without a defined frequency for one of the receive channels display a u to indicate undefined.

The degree of interference found for R1 and R2 displays on the far-right two (2) positions on the screen.

| Interference Level | Right Half of LCD Display |
|---|---|
| None | Blank |
| Weak | Single Bar |
| Moderate | Double Bar |
| Strong | Triple Bar |

## Lock Out

This function allows the user to lock the top panel and menu options. The top panel buttons still work, but the TALK button options cannot be changed. Likewise, values on the LCD screen in the beltpack can be viewed but not changed.

To **enable/disable Lock Out**, do the following:

1. Press and hold the **UP and DOWN buttons** for two (2) seconds.
   *The words* `Loc oq` *appear on the screen when lock out is active.*
2. Press and hold the **UP and DOWN buttons** for two (2) seconds again to disable lock out.
   *The words* `Loc off` *appear.*

## First Use Default

This function sets the beltpack to Group 1A, channel 1 and leaves any user-programmed groups in memory. It sets units to factory-defined menu settings. It also sets the TALK buttons to their default modes.

To **activate the First Use Default**, do the following:

> Press and hold **MENU** while powering-up the beltpack.

## Factory Reset

This function sets the beltpack to Group 1A, channel 1 and **ERASES** any user-defined groups in memory. It sets a unit to factory settings. It also sets the TALK buttons to their default modes.

To **activate factory reset**, do the following:

> Press and hold **MENU + SET + UP + DOWN** for three (3) seconds.

## RF Monitor Screen

The RF monitor screen displays beltpack RF status.

To **display the beltpack RF status**, do the following:

1. Press and hold **MENU** for two (2) seconds to display beltpack RF status.
   - If the channel button is set to 1, then signal strength displays for R1 frequency.
   - If the channel button is set to 2, then signal strength displays for R2 frequency.

| TX Power | Signal Strength |
|---|---|
| Lo = 10mW | 0= NO |
| hi = 50mW | 1= Very Weak |
| | 2= Weak |
| | 3= Moderate |
| | 4= Strong |
| | 5= Very Strong |

2. Press **MENU** again to exit RF Monitor Screen.

## Setting Beltpack ID

Several functions require the beltpack to know which base and channel it is associated with.

- Auto Power Setting: The beltpack reduces its TX power when close to the base. Beltpack transmit power must be set to Auto.
- Portable Station Deselect: The base can disable the TALK button of a beltpack. This shuts off the mic in PTT mode and turns off the transmitter in PT TR mode.
- First-On-Latch-Out: This locks a base receive channel so only one beltpack can transmit on the frequency at a time. A beltpack user attempting to talk on top of another beltpack on the same frequency hears a double beep in their headset.

A beltpack tries to establish its ID automatically when its group/channel changes. The base must be on for this to work.

To **check or set beltpack ID manually**, do the following:

1. Press and hold **UP** for two (2) seconds.
   *The LCD displays ID Base# - Receiver#.*

For example: ID 1-3 means Base 1, Receiver 3.

If the LCD displays ID--- or does not match the base and receiver, the beltpack is assigned to, Auto Power, Portable Station Deselect, and First-On-Latch Out will not work correctly.

2. If the beltpack ID is correct, press **MENU** to exit.
3. If the beltpack ID is not correct, press **SET**.
   *The ID numbers flash.*
4. Using the UP/DOWN buttons, select a **new ID**.
5. Press **SET** to apply the new ID.

Bases with transmitters enabled are always base #1. A second base using the first base transmitters instead of its own, and properly connected to the first base through CAN bus link cables becomes base #2, etc.

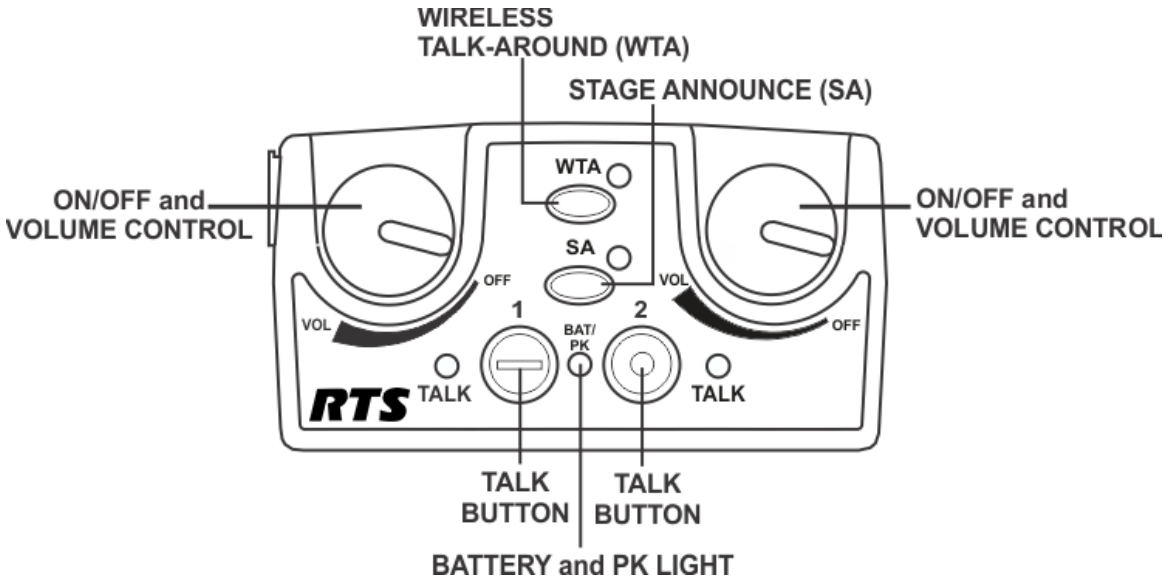


**FIGURE 76.** TR-32N Top Panel Controls

## On/Off and Volume Control

To **turn the beltpack power on**, do the following:

> Rotate the **On/Off Volume Control knob**(s) CW.

To **adjust the volume to the headset**, do the following:

> Rotate the **On/Off Volume Control knob** as required for a comfortable listening volume.
> Left control = channel one (1)
> Right control = channel tow (2)

## TALK Button

To **enable the audio path from the headset microphone**, do the following:

> Press the **TALK button**.
> *The talk light activates when the TALK button is active.The TALK button has three (3) software selectable modes that can be seen via the LCD display of the beltpack.*

To **select the TALK button mode**, do the following:

1. Press and hold **SET** while pressing the **TALK button**.
   *The current mode of the TALK button displays the first time the TALK button is hit. Pressing the TALK button a second time changes the mode of the button.*
2. Release **SET** to accept the currently displayed setting.

| | | |
|---|---|---|
| Selectable Modes: TALK | 1 or 2 off | TALK disabled |
| | 1 or 2 on | Push-to-talk |
| | 1 or 2 Lon | Push-to-latch |

## Battery/Peak Light

The battery/peak lights indicate battery condition and audio modulation status.

| | | |
|---|---|---|
| **Battery** | Light flashes on power up | = Battery OK |
| | Light on continuously | = Battery Low |
| | Light does not flash or come on | = Battery Dead |
| | | |
| **Over modulation** | Light flashes on some speech | = Gain OK |
| | Light flashes on all speech | = Gain too High |
| | Light never flashes on speech | = Gain too Low |

## Stage Announce (SA)

To **route audio from the beltpack to the stage announce connector**, do the following:

> Press the **SA button**.
> *The base station's SA relay closes. The beltpack sidetone is lost as an indication that stage announce is activated. The other beltpacks and wired users do not hear this beltpack's audio when SA is pressed. The button is non-latching and activates the nearby red LED when pressed.*

To **enable or disable Stage Announce**, do the following:

1. Press and hold **SET** while pressing the **SA button**.
   *The current mode of the SA button displays.*
2. Still holding **SET**, press the **SA button** again to turn SA on or off.
3. Release **SET** to accept the displayed setting.

## Wireless Talk-Around (WTA)

To **disconnect the beltpack audio from the wired intercom, auxiliary input/output, and the base station's local headset,** do the following:

> Press the **WTA button**.
*Other beltpack users on that audio channel can hear the user as normal. The WTA button activates the nearby red LED as well as the appropriate talk LED when pressed.*

To **enable or disable Wireless Talk-Around options**, do the following:

1. Press and hold **SET** while pressing the **WTA butto**n.
*The current WTA mode displays. Pressing WTA a second time changes modes. Options followed by an L = latch.*
2. Release **SET** to accept the displayed setting.

| | |
|---|---|
| tA Pb | WTA of currently selected talk button |
| tA 1L | WTA Channel 1 only-Latching |
| tA 2L | WTA Channel 2 only-Latching |
| tA 12L | WTA Channel 1 & 2-Latching |
| tA PbL | WTA of currently selected talk button-Latching |
| tA off | WTA Disabled |
| tA1 | WTA Channel 1 |
| tA2 | WTA Channel 2 |
| tA12 | WTA Channel 1 & 2 |

## Groups and Channels

The first LCD screen the beltpack displays is the Group/ Channel screen. This screen shows the currently selected receive group followed by the beltpack transmit channels.

To **edit groups and channels**, do the following:

1. Push **SET** to edit the transmit channel.
   *The channel number flashes.*
2. Using the UP/DOWN arrow buttons, select the **desired transmit channel**.
3. Push **SET** to accept the channel.
   *The receive group flashes.*
4. Using the UP/DOWN arrow buttons, select the **desired receive group**.
5. Push **SET** to accept the receive group.
   *The new group containing the selected channel is now set.*

**NOTE:**

- To escape out of the editing without any changes, Press MENU.
- Factory group frequencies cannot be changed. User group frequencies (Group 19u to 30u) can be changed.

## Transmit Frequency

The **Transmit Frequency** screen displays the beltpack transmitter frequency in MHz. The frequency is not changeable in factory-determined groups, but it is changeable in user-defined groups.

To **edit the TX frequency (User Groups Only)**, do the following:

1. Set **the unit** to the desired user-defined group and channels.
   *See Groups and Channels Instructions. The menu structure in Figure 77 indicates how to get to the transmit frequency screen.*
2. Push **SET** to edit the TX frequency.
   *The frequency flashes.*
3. Using the UP/DOWN arrow buttons, select the **desired frequency**.
   *The frequency can be changed in 25 kHz steps.*
4. Push **SET** to place the unit on the new transmit frequency.

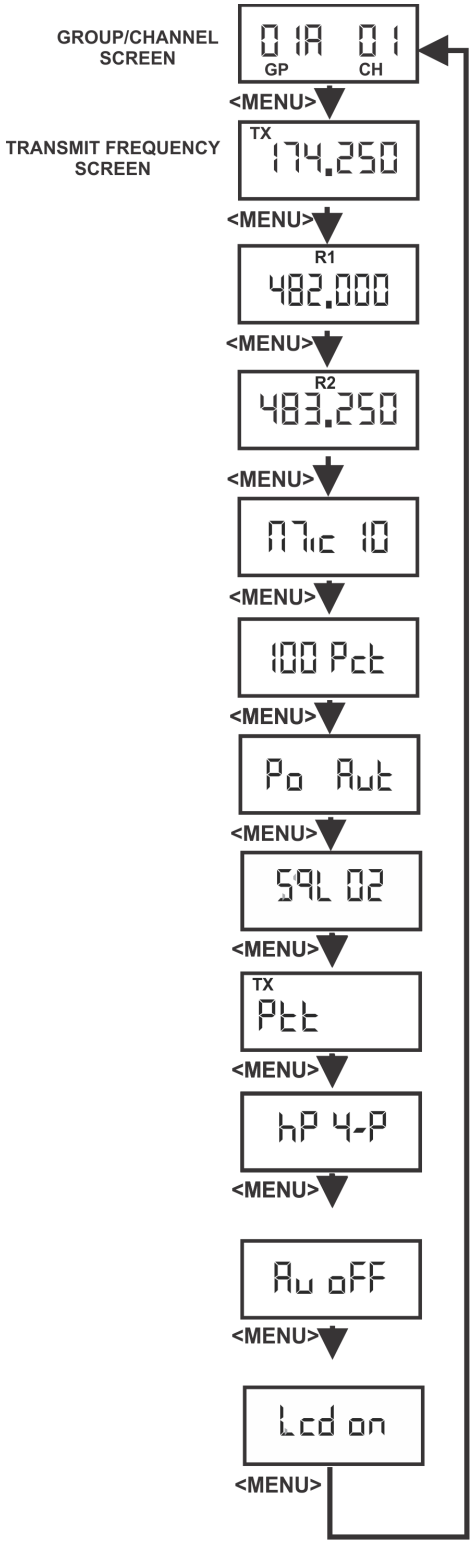


**FIGURE 77.** Group/Channel and Transmit Screen

## Receive Frequency

The Receive Frequency screen displays the beltpack receiver frequency in MHz. The frequency cannot be changed in factory-defined groups, but can be changed in user-defined groups.

To **edit the RX frequency (User Groups Only)**, do the following:

1. Set the **unit** to the desired user-defined group and channels. *See Groups and Channels Instructions. The menu structure in Figure 78 indicates how to get to the receive frequency screen.*
2. Push **SET** to edit the RX frequency. *The frequency flashes.*
3. Using the UP/DOWN arrow buttons, select the **desired frequency**. T*he frequency can be changed in 25 kHz steps.*
4. Push **SET** to place the unit on the new receive frequency.

## Microphone Gain

The **Microphone Gain** screen displays the beltpack microphone gain setting. There are 16 possible settings. The number zero (0) indicates minimum microphone gain, the number 15 is maximum. Each step is about three (3) dB.

To **adjust the microphone gain**, do the following:

1. Push **SET** at the microphone gain screen. *The number flashes.*
2. Using the UP/DOWN arrow buttons, to select the **desired gain**.
3. Push **SET** to place the unit at the indicated microphone gain.

## Battery Display

The **Battery Display** screen indicates the current percentage of battery remaining.

### Battery Percentages

100 Pct. = Fresh Battery
75 Pct. = 75% Life Left
50 Pct. = 50% Life Left
25 Pct. = 25% Life Left
10 Pct. = 10% Life Left. Low Battery Light.
0 Pct. = Battery Dead. Unit will lose communication at any time.

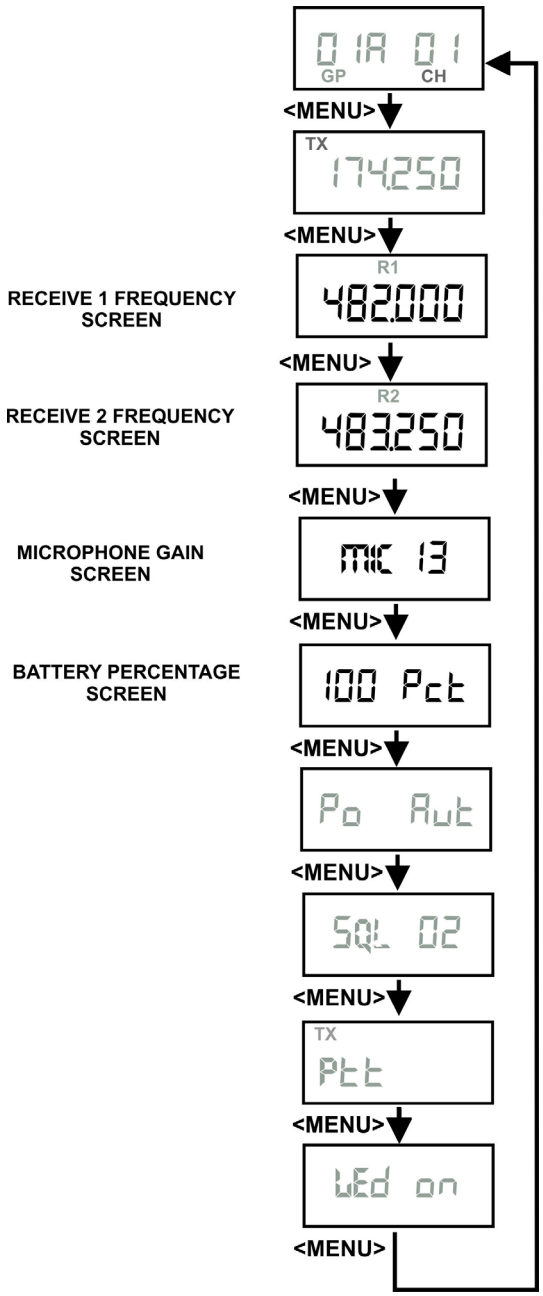


**FIGURE 78.**
Receive frequencies/Microphone Gain
Battery Percentage Screen

## Low Battery Alert Tone

The beltpack sends an audio alert tone to the headset if battery life reaches 10%. The 1 kHz tone is heard for 0.5 seconds, every 30 seconds. The tone is only heard and set at the beltpack.

To **set the low battery alert tone**, do the following:

1. Press **SET** at the battery percentage screen.
   *A screen appears displaying* `Lbt oFF`.
   *The low battery tone option also flashes*

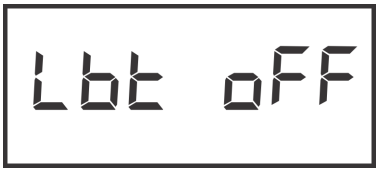


2. Using the UP/DOWN arrow buttons, turn the **low battery tone option** on or off.
3. Press **SET** to accept the change.
   *The screen now displays with AL or ni flashing.*

4. Using the UP/DOWN arrow buttons, select **AL or ni** for Alkaline/NiMH battery gauge calibration.
5. Press **SET** to return to the battery gauge screen.

## Transmit Power

The **Transmit Power** screen displays the current setting of the beltpack transmitter's output power level. There are four (4) settings.

### Transmit Power Settings

| | |
|---|---|
| Auto (Default) | The beltpack's transmitter adjusts its output level according to information sent to the beltpack from the base station. It adjusts between two (2) levels: 10mW or 50 mW. |
| 10 | The beltpack transmits at 10 mW |
| 50 | The transmitter is at 50 mW |

When the unit is set to auto, base station information tells the beltpack the appropriate power settings to use based upon the received signal strength level at the base station. By reducing the transmit power when possible, the battery life of the beltpack can be slightly extended and intermodulation products can be reduced.

To **change the transmit power setting**, do the following:

1. Push **SET** at the transmit power screen.
2. Using the UP/DOWN arrow buttons, select the **power setting**.
3. Push **SET** to place the unit at the indicated setting.

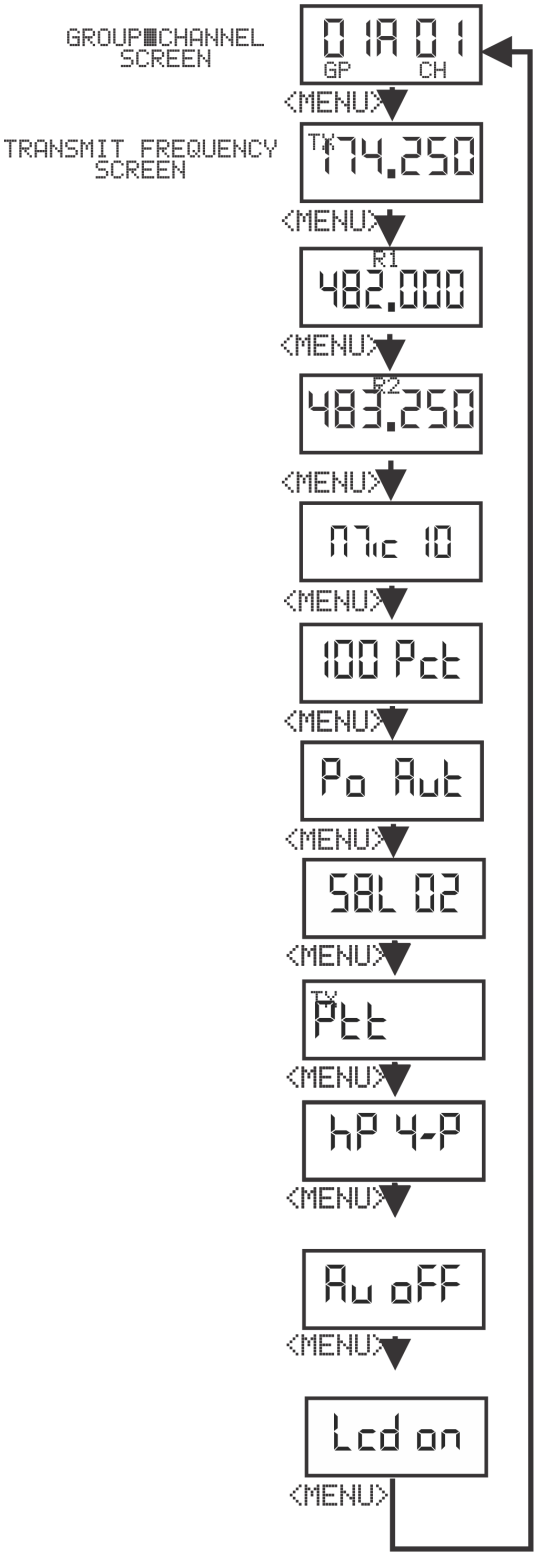


**FIGURE 79.**
Transmit Power/Squelch Screen

## Squelch Screen

The **Squelch** screen allows the user to adjust the beltpack squelch level.

To **adjust the squelch level**, do the following:

1. Push **SET** at the squelch screen.
   *The squelch setting flashes.*
2. Using the UP/DOWN arrow buttons, select the **squelch setting**.
   *A setting of 00 holds the squelch open for testing.*

**WARNING:** Do not set the squelch to 00 while wearing headphones with the volume turned up. White noise with no signal can be uncomfortably loud.

*3. Push **SET** to save the new squelch setting.*

| Squelch Lvl | Approx. SINAD | Notes |
|---|---|---|
| 00 | NA | Open |
| 01 | 12 | |
| 02 | 20 | Default |
| 03 | 24 | |
| 04 | NA | RSSI Lvl Squelch |

**NOTE:** The beltpack employs two (2) different types of squelches. A fast acting noise-type squelch and a slower data squelch. For audio to be received by the beltpack, both a good signal-to-noise audio signal (with a noise threshold set via the user squelch settings above) and a valid data stream must be detected.

## Headphone Options:

- If the TR-32N has a 4-pin headset connector, the headphone should be set to **hP 4-P** (4-pin).
- When supplied with a 5-pin (stereo) headset connector, the settings **hP Add** should be used for Mono or **hP SEP** for channel 1 in left earpiece and channel 2 in right earpiece.
- A 5-pin single-sided headset should be set to **hP 4-P**.

## Auxiliary Input:

The TR-32N has a 3.5 mm mono auxiliary input jack. Audio from this jack is heard only in the beltpack headset.

To **set the Auxiliary mode**, do the following:

1. Press **SET**.
2. Using the UP/DOWN arrow buttons, select the **AUX mode setting**.

| Setting | Auxiliary Input Function |
|---|---|
| ***Off*** | Aux input disabled |
| 1 | Aux heard with Ch 1 |
| 2 | Aux heard with Ch 2 |
| 12 | Aux heard with Ch 1 & 2 |

3. Press **SET** to accept the screen setting.
   *If Aux is not Off, the next screen displays* Au NN *where NN is a two (2) digit number between 0 and 15. This is the volume level setting for the aux input.*
4. Press **SET**.
   *The two (2) digits will flash.*
5. Using the UP/DOWN arrow buttons, select the **AUX volume**.
6. Press **SET** to accept the gain setting.

## Transmit Mode Screen

The **Transmit Mode** screen is used to select the following modes:

| Transmit Mode | Description |
|---|---|
| Stt | Push-to-Talk. The transmitter is always on. Pressing the TALK button un-mutes the audio. The beltpack responds to the base audio mute commands.<br>When a user disables the beltpack Portable Station Connect button, the beltpack TALK button turns off. |
| St tu | Push-to-Transmit. The transmitter is off and audio muted until the TALK button is on. The beltpack will ignore lockout or shutdown commands from the base. |
| St tuo | Push-to-Transmit Lockout Enabled. The transmitter is off and audio muted until the TALK button is on. The beltpack will respond to lockout commands from the base, such as First-On-Latch Out and Portable Station Connect disable. |
| St tuq | Push-to-Transmit Lockout Enabled but no busy tone. This mode is the same as Pt trL but no “busy” tone heard in beltpack if channel is occupied. |

To **change the transmit mode setting**, do the following:

1. Push **SET** at the transmit mode screen.
   *The screen flashes.*
2. Using the UP/DOWN arrow buttons, select the **transmit mode**.
3. Push **SET** to save the mode change.

## LEDs Off/On

The **LED Off/On** screen is used to disable all LEDs. This function is useful for users who do not wish to show LEDs in the dark.

To **turn LEDs on or off**, do the following:

1. Push **SET** at the LED off/on screen.
2. Using the UP/DOWN arrow buttons, select the **desired mode**.

## Software Version/Band

The **Software Revision** and **Frequency Band** of the beltpack may be displayed from any of the main beltpack screens.

To **view the software revision and frequency band**, do the following:

> In any of the beltpack main screens, press and hold **DOWN** for two (2) seconds.
- The first screen indicates the frequency band of the beltpack.
- The second screen indicates the software revision.

After displaying the information, the screen reverts back to the main screen.

The screens below indicate an E5 band beltpack with 80E052 version software.

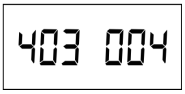


## ClearScan™

**ClearScan™** helps you find clear RF frequencies in your area. The beltpack's receiver scans all the factory-defined groups and any set user-defined groups. The result is a list of beltpack receive groups, clear of interference.

To **enter ClearScan™,** do the following:

1. Press and hold **MENU + SET** for two (2) seconds to start ClearScan™.
   *The beltpack display changes to ClrScn and the GP icon flashes. After about 12 seconds, the beltpack displays the first clear group. The group number flashes.*
2. Using the UP/DOWN arrow buttons, display the **clear groups**.
3. Press **SET** to select a group.
4. Press **MENU** to bail out without selecting a group.

Clear groups are displayed first. They are in group order. You can scroll down through groups using the DOWN button. The left-half of the screen gives you an indication of interference levels as you scroll through the groups.

User-defined groups without a defined frequency for one of the receive channels display a u to indicate undefined.

The degree of interference found for R1 and R2 displays on the far-right two (2) positions on the screen.

| Interference Level | Right Half of LCD Display |
|---|---|
| None | Blank |
| Weak | Single Bar |
| Moderate | Double Bar |
| Strong | Triple Bar |

## Lock Out

**Lock Out** allows the user to lock the top panel and menu options. The top panel buttons still work, but the TALK button options cannot be changed. Likewise, values on the LCD screen in the beltpack can be viewed but not changed.

To **enable/disable Lock Out**, do the following:

1. Press and hold the **UP and DOWN buttons** for two (2) seconds.
   *The words* `Loc oq` *appear on the screen when lock out is active.*
2. Press and hold the **UP and DOWN buttons** for two (2) seconds again to disable lock out.
   *The words* `Loc off` *appear.*

## First Use Default

**First Use Default** sets the beltpack to Group 1A, channel 1 and leaves any user-programmed groups in memory. It sets units to factory-defined menu settings. It also sets the TALK buttons to their default modes.

To **activate the 1st Use Default**, do the following:

> Press and hold **MENU** while powering-up the beltpack.

## Factory Reset

**Factory Reset** sets the beltpack to Group 1A, channel 1 and ERASES any user-defined groups in memory. It sets a unit to factory settings. It also sets the TALK buttons to their default modes.

To **activate factory reset**, do the following:

> Press and hold **MENU + SET + UP + DOWN** for two (2) seconds.

## RF Monitor Screen

The **RF Monitor Screen** displays beltpack RF status.

To **display the beltpack RF status**, do the following:

1. Press and hold **MENU** for two (2) seconds to display beltpack RF status.
   - If the channel button is set to 1, then signal strength displays for R1 frequency.
   - If the channel button is set to 2, then signal strength displays for R2 frequency.

| TX Power | Signal Strength |
|---|---|
| Lo = 10mW | 0= NO |
| hi = 50mW | 1= Very Weak |
| | 2= Weak |
| | 3= Moderate |
| | 4= Strong |
| | 5= Very Strong |

2. Press **MENU** again to exit RF Monitor Screen.

## Setting Beltpack ID

Several functions require the beltpack to know which base and channel it is associated with.

1. Auto Power Setting: The beltpack reduces its TX power when close to the base. Beltpack transmit power must be set to Auto.
2. Portable Station Deselect: The base can disable the TALK button of a beltpack. This shuts off the mic in PTT mode and turns off the transmitter in PT TR mode.
3. First-On-Latch-Out: This locks a base receive channel so only one beltpack can transmit on the frequency at a time. A beltpack user attempting to talk on top of another beltpack on the same frequency hears a double beep in their headset.

A beltpack tries to establish its ID automatically when its group/channel changes. The base must be on for this to work.

To **check or set beltpack ID manually**, do the following:

1. Press and hold **UP** for two (2) seconds.
   *The LCD displays ID Base# - Receiver#.*

For example: ID 1-3 means Base 1, Receiver 3.

If the LCD displays ID--- or does not match the base and receiver, the beltpack is assigned to, Auto Power, Portable Station Deselect, and First-On-Latch Out will not work correctly.

2. If the beltpack ID is correct, press **MENU** to exit.
3. If the beltpack ID is not correct, press **SET**.
   *The ID numbers flash.*
4. Using the UP/DOWN buttons, select a **new ID**.
5. Press **SET** to apply the new ID.

Bases with transmitters enabled are always base #1. A second base using the first base transmitters instead of its own, and properly connected to the first base through CAN bus link cables becomes base #2, etc.

APPENDIX A

# *Additional Resources*

## BTR-30N Menu Structure

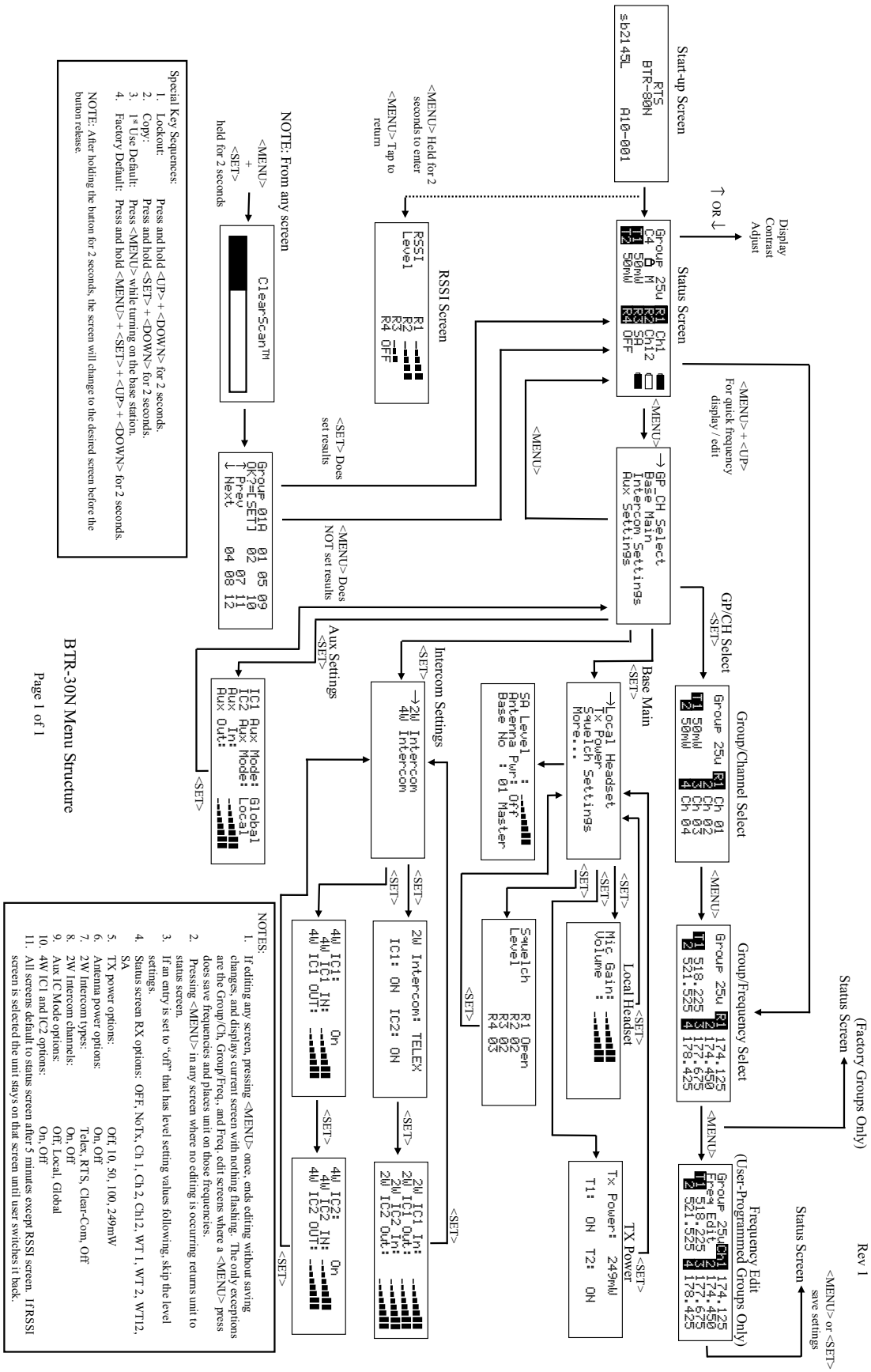

11/05/2019
Rev1

# TR-30N Beltpack Screen Flowchart

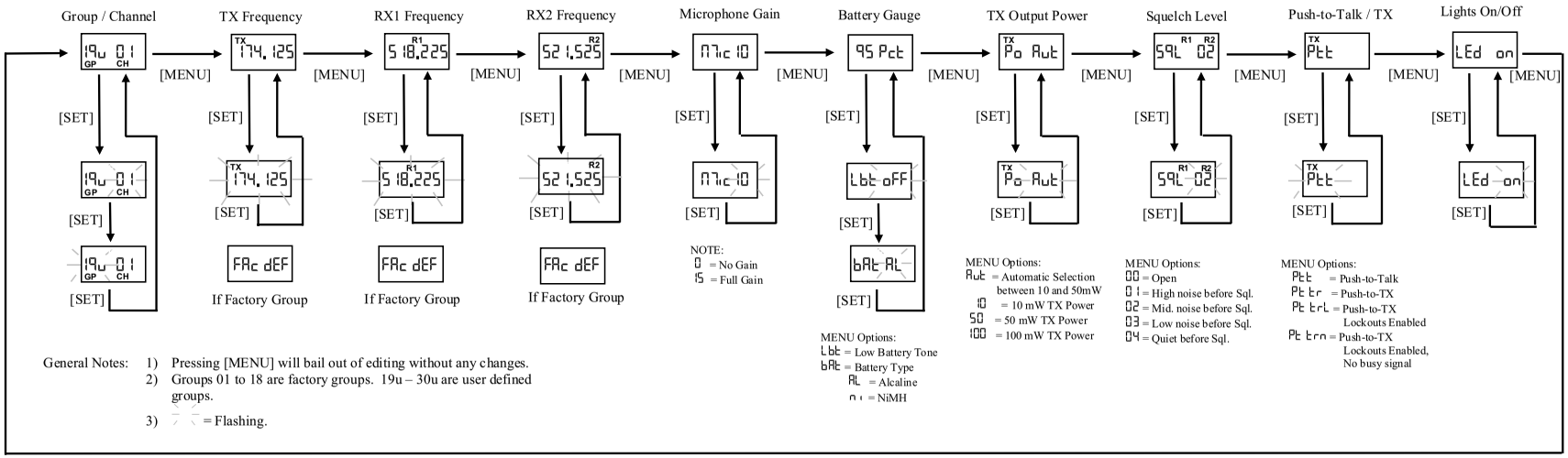


General Notes:
1) Pressing [MENU] will bail out of editing without any changes.
2) Groups 01 to 18 are factory groups. 19u – 30u are user defined groups.
3) = Flashing.

## Special Key Functions

| Tx Power and Receiver RSSI | Beltpack Identification | Software Band Software Version | ClearScan | Talk Button Options | Stage Announce (SA) | Wireless Talk Around (WTA) | Lockout | 1st Use Default | Factory Reset Default |
|---|---|---|---|---|---|---|---|---|---|
| Hold [MENU] for 2 seconds<br>Press [MENU] to exit to normal menus<br>Function: Display current TX power of unit:<br>hi = 50mW<br>Lo = 10mW<br>-- = Off<br>Display receiver strength; 0 – 5:<br>0 = Clear<br>5 = Strong Signal | Hold [↑] for 2 seconds<br>[SET]<br>[SET]<br>Press [MENU] to exit to normal menus<br>Function: View ID assigned to beltpack by base station.<br>May also be used to change beltpack ID. | Hold [↓] for 2 seconds<br>Displayed for 1 second<br>Displayed for 1 second or when [↓] released<br>Back to normal menu | Hold [MENU] + [SET] for 2 sec.<br>After 10 seconds best group selected<br>[SET]<br>[SET]<br>Group / Channel Screen | Hold [SET] and press [TALK]<br>[TALK]<br>[TALK]<br>Function: Talk button operation.<br>= Talk latch on<br>= Talk disabled<br>= Momentary | Hold [SET] and press [SA]<br>[SA]<br>[SA] | Hold [SET] and press [WTA]<br>[WTA]<br>Options in menu:<br>on = Momentary<br>Lon = Latch<br>oFF = WTA disabled<br>[WTA] | Hold [↑] + [↓] for 2 seconds<br>Hold [↑] + [↓] again for 1 second<br>Function: Menu items can be viewed but not changed when activated. | Hold [MENU] as powering-up unit<br>Sets unit to Group 01A, Channel 01, with 01 flashing. User must set channel number.<br>**Sets unit to defaults**<br>**All user-defined groups are retained** | Hold [MENU] + [SET] + [↑] + [↓] for 2 seconds<br>Sets unit to Group 01A, Channel 01, with 01 flashing. User must set channel number.<br>**Sets unit to defaults**<br>**All user-defined groups are erased** |

## TR-32N Beltpack Screen Flowchart

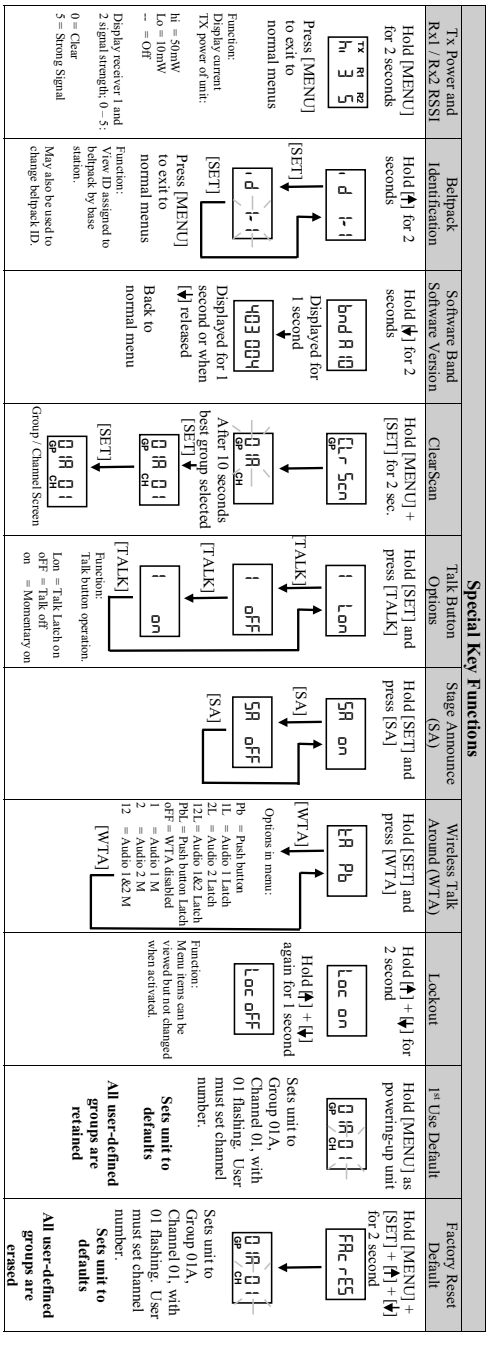


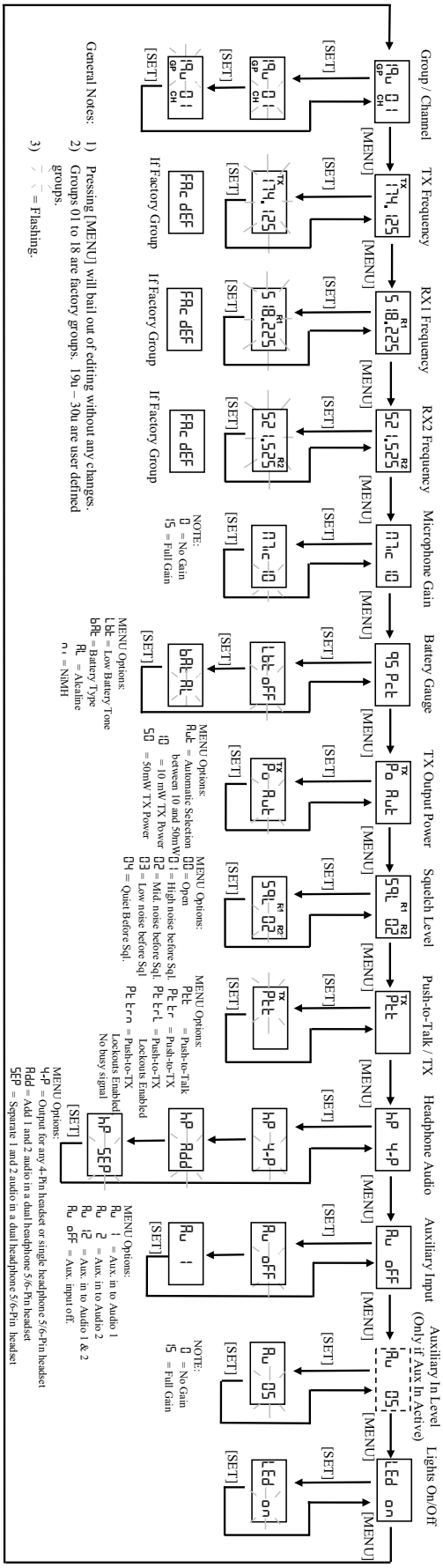


11/05/2019
Rev1

## *Frequency Bands*

The BTR-30N system operates over the following frequency ranges:

- Base TX: 482-572 MHz
- Base RX: 174-216 MHz

The bands, US TV channels, and frequencies are shown in Figure 80.The UHF bands are 18 MHz wide. The VHF bands are 24 MHz wide.

Bands F to C are always base transmit bands (beltpack receive bands). Bands 10-13 are always base receive bands (beltpack transmit bands). An F10 base station is comprised of an F band transmitter and a 10 band receiver.

### Band Pairing for Systems

Table 3 show the available band pairings.

| Base TX Bands | Base RX Bands |
|---|---|
| F | 10,13 |
| H | 10,13 |
| A | 10,13 |
| B | 10,13 |
| C | 10,13 |

**TABLE 3.** Available band pairings

**FIGURE 80.** Band Names Frequencies and US TV Channels

| Band | US TV | Freq. Start | Freq. End | US TV |
|---|---|---|---|---|
| 10 | 7 | 174 | 180 | 7 |
| | 8 | 180 | 186 | 8 |
| | 9 | 186 | 192 | 9 |
| 10/13 | 10 | 192 | 198 | 10 |
| 13 | 11 | 198 | 204 | 11 |
| | 12 | 204 | 210 | 12 |
| | 13 | 210 | 216 | 13 |
| F | 16 | 482 | 488 | 16 |
| | 17 | 488 | 494 | 17 |
| | 18 | 494 | 500 | 18 |
| H | 19 | 500 | 506 | 19 |
| | 20 | 506 | 512 | 20 |
| | 21 | 512 | 518 | 21 |
| A | 22 | 518 | 524 | 22 |
| | 23 | 524 | 530 | 23 |
| | 24 | 560 | 536 | 24 |
| B | 25 | 536 | 542 | 25 |
| | 26 | 542 | 548 | 26 |
| | 27 | 548 | 554 | 27 |
| C | 28 | 554 | 560 | 28 |
| | 29 | 560 | 566 | 29 |
| | 30 | 566 | 572 | 30 |

## Frequency Plan

There are 48 groups in a BTR-30N system. The 48 groups are divided up into 36 factory-defined groups and 12 user-defined groups. A group referenced to a base station is comprised of two TX channels and up to 12 RX channels.

**User-defined groups** are blank initially and allow the user to enter their own frequencies.

**Factory-defined groups** are composed of frequencies that cannot be modified by the user. The 36 groups are composed of the following:

Nine (9) Triplet Groups

- Groups 1a to 9c

Nine (9) Single Groups

- Groups 10-18

The factory groups are organized in different ways to provide flexibility to the user on selecting frequencies. A groups is composed of intermodulation free frequencies. The triplet groups may be used together for up to three (3) systems that are intermodulation coordinated. For example, three intermodulation coordinated systems may be set up by using the following groups and channels:

- System A = Group 1a, channels: 1, 2, 3, 4
- System B = Groups 1b, channels: 5, 6, 7, 8
- System C = Group 1c, channels: 9, 10, 11, 12

A group also contains frequencies within different combinations of the TV channels. The user can select a group clear of broadcast Tv channels in the area by selecting a group(s) not using those channels.

Figure 81 indicates how the factory-defined groups used the three (3) TV channels for TX and three (3) TV channels for receive. These plans are based upon US broadcast TV channels. A darkened TV channel indicates the group has frequencies in the channel. The white TV channel indicates the group has no frequencies in the channel. For example, Group 1A uses at least one (1) frequency from each of the three (3) TV channels for RX and only the 1st TV channel for TX. However, group 18 uses only the 3rd TV channel for TX and RX.

| | Base UHF TX Freq. | | | Base VHF RX Freq. | | | |
|---|---|---|---|---|---|---|---|
| | TV1 | TV2 | TV3 | TV4 | TV5 | TV6 | TV7 |
| 1a | ■ | | | ■ | ■ | ■ | ■ |
| 1b | ■ | | | ■ | ■ | ■ | ■ |
| 1c | ■ | | | ■ | ■ | ■ | ■ |
| 2a | | ■ | | ■ | ■ | ■ | ■ |
| 2b | | ■ | | ■ | ■ | ■ | ■ |
| 2c | | ■ | | ■ | ■ | ■ | ■ |
| 3a | | | ■ | ■ | ■ | ■ | ■ |
| 3b | | | ■ | ■ | ■ | ■ | ■ |
| 3c | | | ■ | ■ | ■ | ■ | ■ |
| 4a | ■ | | | ■ | ■ | | |
| 4b | ■ | | | ■ | ■ | | |
| 4c | ■ | | | ■ | ■ | | |
| 5a | | ■ | | ■ | ■ | | |
| 5b | | ■ | | ■ | ■ | | |
| 5c | | ■ | | ■ | ■ | | |
| 6a | | | ■ | ■ | ■ | | |
| 6b | | | ■ | ■ | ■ | | |
| 6c | | | ■ | ■ | ■ | | |
| 7a | ■ | | | ■ | | ■ | |
| 7b | ■ | | | ■ | | ■ | |
| 7c | ■ | | | ■ | | ■ | |
| 8a | | ■ | | ■ | | ■ | |
| 8b | | ■ | | ■ | | ■ | |
| 8c | | ■ | | ■ | | ■ | |
| 9a | | | ■ | ■ | | ■ | |
| 9b | | | ■ | ■ | | ■ | |
| 9c | | | ■ | ■ | | ■ | |
| 10 | ■ | | | ■ | ■ | ■ | ■ |
| 11 | | ■ | | ■ | ■ | ■ | ■ |
| 12 | | | ■ | ■ | ■ | ■ | ■ |
| 13 | ■ | | | ■ | | | ■ |
| 14 | | ■ | | ■ | | | ■ |
| 15 | | | ■ | | ■ | | |
| 16 | ■ | | | | ■ | | |
| 17 | | ■ | | | | ■ | |
| 18 | | | ■ | | | ■ | |

**FIGURE 81.**
Groups and Tv Channels Used

Dark = TV used
Light = TV not used

## *Troubleshooting*

| PROBLEM | SOLUTION |
|---|---|
| **DISTORTION** - System's audio quality seems distorted at medium to high input levels | Reduce microphone gain by adjusting microphone gain control in software. |
| **HISS** - System seems to produce a hiss which is undesirable. | Check the gain setting on all beltpacks and the base. They may be too low or too high. Check to make sure you are still well within range of the base station. |
| **LOW OUTPUT** - System produces a low output level. | Check the gain setting on both the beltpacks and the base. They may be too low. |
| **FEEDBACK** - Moving around are of use produces squeal or howl in various locations using the ext. speakers. | Reduce the gain settings on both the beltpacks and the base. They may be too high. If in 2-wire mode, the intercom channel you are on may be unloaded. |
| **DROPUOUTS** - When moving around the area of use there seem to be locations where the signal swooshes or completely disappears. | Make sure both antennas on the base and beltpack are connected and follow the location suggestions. Change the location of the base unit and antennas or avoid the bad areas with the remote beltpacks. |
| **INTERFERENCE** - System picks up signals other than wireless intercoms. | Make sure the beltpack(s) are on. If there are any unused receivers at the base, turn the audio off from those receivers by deselecting the appropriate Portable Station Connect button.<br>If problems persist with the beltpack on, you will probably need to change the group. Make sure the base and beltpack match after any Group/Channel change. |
| **NO AUDIO** - from base of beltpack headsets. | Check transmitter setting on base and beltpack. Check talk LED to ensure it is on. Make sure beltpack batteries are OK. |
| **BASE and BELTPACK'S Frequencies Don't Match** - In the display frequencies screen of the base and the menu of the beltpack the frequencies don't match. | Ensure the units are on the correct Group and Channels. |

**IMPORTANT:** Reread the sections of this manual to make sure you completed system set-up properly.
If you are unable to solve the problem, contact the dealer from whom you purchased the system for assistance

## *Battery Information*

Improper battery selection, use, installation, and care are the cause of numerous wireless systems failures.

**Alkaline Batteries:** Alkaline batteries such as Eveready's ENERGIZER and ENERGIZER INDUSTRIAL provide the most reliable operation in wireless transceivers.

**The use of low cost carbon-zinc batteries is NOT recommended.**

**Nickel-Metal Hydride Batteries:** These batteries can save you money in the long run, as they can be recharged. Typical battery life is a little less than the length of time alkaline batteries last.

### Battery Warnings

- Do not place alkaline battery packs in any battery charger. Severe charger and battery pack damage may occur!
- Batteries that have been dropped, or otherwise damaged, should not be used and should be discarded properly. Dropping batteries can crack the internal casing causing leakage or rupture resulting in personal injury or property damage!
- Insert batteries properly, with the plus (+) and minus (-) terminals aligned correctly!
- Do not mix old and new batteries, batteries of different types, or batteries of different brands. This can cause leakage or rupture, resulting in personal injury or property damage!
- Immediately remove exhausted batteries from the battery pack and dispose of properly.
- Replace all used batteries in your device at the same time.
- Do not put batteries or battery-powered devices in very warm places. Extreme temperatures reduce battery performance and may also lead to leakage.
- Use only high quality AA sized alkaline batteries in the battery packs.
- When not in use, disconnect battery pack, remove and store batteries in a cool, dry place at normal room temperature until ready to use.
- Keep battery contact surfaces clean by gently rubbing with a clean pencil eraser or cloth.

### Battery Life

**TR-30N**

Alkaline, 11-13 hours typical

Nickel-Metal Hybrid, 10-12 hours typical

**TR-32N**

Alkaline, 8-10 hours typical

Nickel-Metal Hybrid, 7-9 hours typical

Energizer® is a registered trademark of Union Carbide Corporation

### Cold Temperatures and Batteries

The battery life times listed in this section are at room temperature. Alkaline and Nickel-Metal Hydride battery service hours fall off significantly at low temperature due to battery chemistry. Alkaline batteries typically have less than half their room temperature service life if used at freezing 32° F (0° C). If you use Alkaline and Nickel-Metal Hybrid batteries at low temperatures, you need to change them more often.

Another solution is using Lithium AA cells if beltpacks are to be used in very cold temperatures. Lithium batteries, like the Energizer ultimate Lithium AA cells, are excellent batteries for cold temperatures. At 15° F (-9° C), Lithium AA cells will last about seven (7) times longer than Alkaline batteries. This equates to two (2) hours for Alkaline vs. 14 hours for Lithium. However, the trade off is Lithium batteries cost more and are less environmentally-friendly than Alkaline batteries.

## *2-Wire Systems Specification*

**RTS**

**Input Impedance:** 200 Ω
**Output Level:** 0.775 Vrms nominal
**Bridging Impedance:** >10kW
**Call Signaling:**
Send: 20kHz ±100 Hz, 240 mVrms
Receive: 20kHz ±800 Hz, 100 mVrms
**Power Voltage:** 28.0 VDC nominal

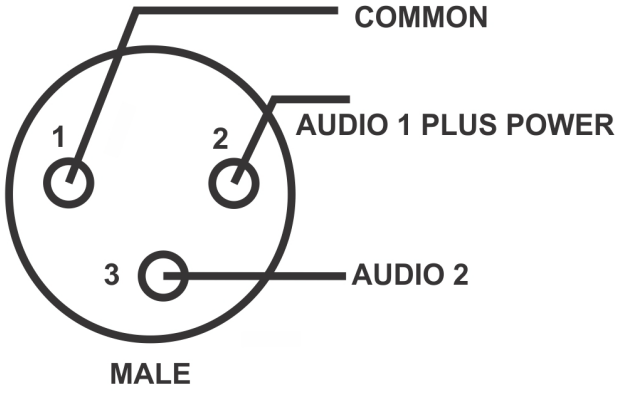


**Telex/ AudioCom**

**Input Impedance:** 300 Ω
**Output Level:** 1.0 Vrms nominal
**Bridging Impedance:** >10kW
**Call Signaling:**
Send: 20kHz ±100 Hz, 0.5 mVrms
Receive: 20kHz ±800 Hz, 100 mVrms
**Power Voltage:** 24.0 VDC nominal

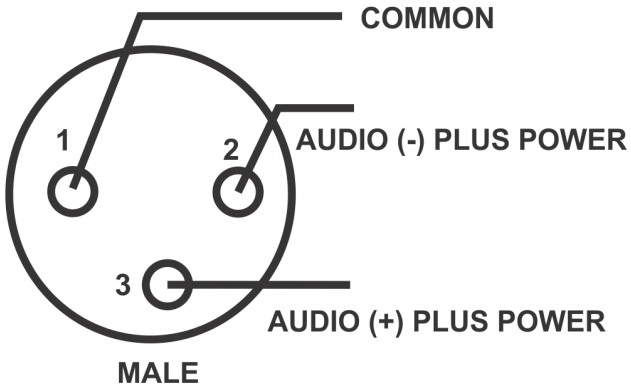


**ClearCom**

**Input Impedance:** 200 Ω
**Output Level:** 1.0 Vrms nominal
**Bridging Impedance:** >10kW
**Call Signaling:**
Send: 12 ±3 VDC
Receive: 4 VDC Minimum
**Power Voltage:** 30.0 VDC nominal

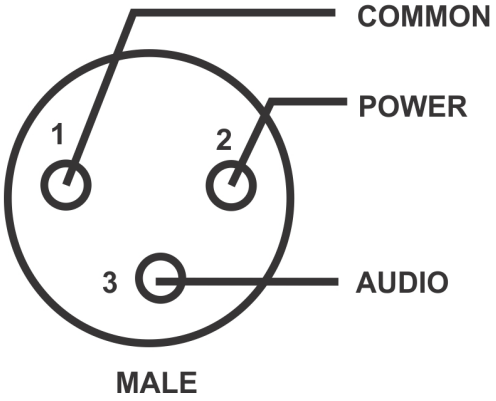

## *Certificate Information*

### FCC

The RTS BTR-30N, TR-30N, and TR-32N Transmitter/receiver are type accepted under United States (FCC) Federal Communications Commission Part 74 and Part 15C, Licensing of this equipment is the user's responsibility and licensibility depends on the user's classification, user's application, and frequency selected. RTS strongly urges the user to contact the appropriate telecommunications authority for any clarification.

This device complies with part 15 of the FCC Rules. Operation is subject to the following two conditions: (1) This device may not cause harmful interference, and (2) this device must accept any interference received, including interference that may cause undesired operation.

This wireless microphone system can be configured for both FCC Part 15C (unlicensed) and FCC Part 74 (licensed) operation. When shipped from the factory, this wireless microphone system is configured for unlicensed operation, and will operate at a power level not to exceed 50 milliwatts, which meets FCC Part 15C requirements. If unlicensed users operate this device in excess of 50 milliwatts, harmful interference may result and the unlicensed user will be subject to substantial monetary forfeitures and other FCC sanctions. The wireless microphone system may be operated by holders of a valid FCC license in the Low Power Auxiliary Radio Service under Part 74 of FCC Rules, at power levels between 50 milliwatts and 250 milliwatts.

**CAUTION:** Changes or modification of equipment made by the user could void the user's authority to operate this equipment.

The beltpack is intended to be worn on the belt of the user with both antennas vertical for best operating range and performance. Placing the beltpack in other locations on the body may reduce performance and void the user's authority by the FCC to operate the equipment.

**Mandatory Safety Instructions to Base Station Installers and Users.**

1. Use only a manufacturer or dealer-supplied antenna. Antenna minimum safe distance, for a base station, as set by the FCC is 20cm. Antenna gain: zero (0) dBd referenced to a dipole.
2. The FCC has adopted a safety standard for human exposure to RF (Radio Frequency) energy, which is below the OSHA (Occupational Safety and Health Act) limits.
3. To comply with current FCC RF Exposure limits, the antenna must be installed at or exceeding the minimum safe distance (20cm) and in accordance with the requirements of the antenna manufacturer or supplier.
4. Antenna substitution: do Not substitute any antenna for the one supplied by or recommended by the manufacturer or radio dealer. You might expose people to harmful radio frequency radiation. You can contact your radio dealer or manufacturer for further information.

**WARNING:** Maintain a separation distance from the antenna to person(s) of at least 20cm.

You, as the qualified end-user of this radio device, must ensure the minimum separation distance of 20cm between the antenna and nearby people to satisfy RF Exposure compliance.The operation of the transmitter must satisfy the requirements of the General Population/Uncontrolled Exposure Environment for work-related use. Transmit only when people are at least the minimum distance from the properly installed, externally mounted antenna.

## Industry Canada

The BTR-30N, TR-30N, and TR-32N Transmitter/receiver are certified to Industry Canada RSS-123 rules.

Licensing of this equipment is the user’s responsibility and licensibility depends on the user's classification, user’s application, and frequency selected. RTS strongly urges the user to contact the appropriate telecommunications authority for any clarification.

Pour se conformer aux exigences FCC et Industrie Canada l'exposition aux RF sur une distance de séparation d'au moins 20 cm (7,9 pouces) doit être maintenue entre les antennes de la station de base BTR-30N et toutes les personnes.

**CAUTION:** Any changes or modifications to the equipment could void the user’s authority to operate the equipment.

**ATTENTION:** Tout changement ou modification non expressément approuvée par la partie responsable de la conformité pourraient annuler l'autorité de l'utilisateur à utiliser cet équipement.

## Europe

This equipment is in compliance with the following directives:

2015/863 RoHS Directive
2012/19/EU WEEE Directive
2014/53/EU RED Directive

Please dispose of the base station and beltpacks at the end of their operational life by taking them to your closest collection point or recycling center.
**DO NOT throw in the trash.**

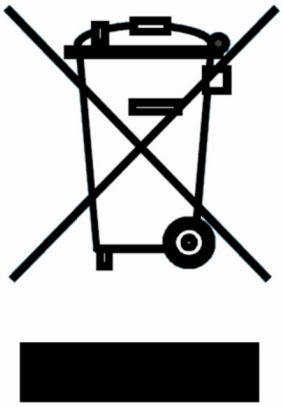

This equipment is intended for use in professional audio intercom applications.

Some countries in the EEA (European Economic Area) have restrictions placed on this equipment. Listed below are these restrictions:

This equipment is not allowed in the following countries due to VHF band not available: DK, NO.

The equipment requires a license in the following countries: AT, BE, BG, HR, CZ, EE, DE, IE, LV, LT, MT, PL, SK, UK.

The BTR-30N requires a license only if operated above 50 mW ERP, in the following countries: FI, EL, HU, IT, PT.

The BTR-30N normally must be set to meet the 50 mW ERP maximum output power in the following countries unless a license for higher power is (as noted above) available in the country: AT, BE, BG, HR, CY, CZ, EE, FI, FR, DE, EL, HU, IS, IE, IT, LV, LI, LT, LU, MT, NL, PL, PT, RO, SK, SI, ES, SE, CH, UK.

There are geographical restrictions due to primary services, e.g. broadcasting, security services, that are inuse within the following countries: AT, CZ, FI, FR, DE, EL, IS, MT, RO, SK, SI, ES, UK.

France (FR): The use of the equipment requires a license if not a professional user.

Spain (ES): The TR-30N and TR-32N may only use the following frequencies 174.100, 174.300, 175.500, 176.300, 179.300.

United Kingdom (UK): The TR-30N and TR-32N may only use the following frequency range: 174-175 MHz.

Netherlands (NL): The TR-30N and TR-32N may only be used in the following frequency range: 195-202 MHz..

Netherlands (NL): The BTR-30N may only be used in the following frequency ranges: 470 - 556, 558 - 564, 566 - 572 MHz

Always consult your national authority before placing equipment into operation as requirements and spectrum usage can change.

The full EC Declaration of Conformity for the BTR-30N, TR-30N and TR-32N products may be found at the following website: www.rtsintercoms.com.

## *Accessories and Replacement Parts*

**ALP-700**

450-760 MHz Bi-directional
Log Periodic Antenna

Model (CTN) No. ALP-700

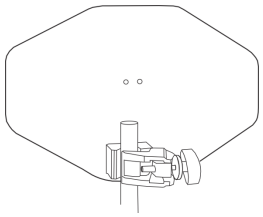

**ALP-450**

450-900 MHz Log Periodic Antenna
Includes mounting hardware and 10 feet
(3 meters) coaxial cable with TNC connectors

Model (CTN) No. ALP-450

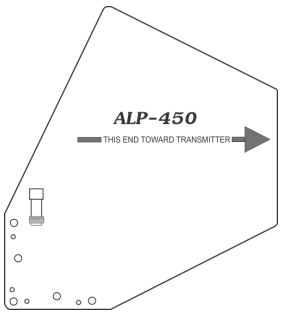


**ALP-600**

520-760 MHz Bi-directional Log Periodic Antenna
Includes mounting hardware and 10 feet (3 meters)
coaxial cable with TNC connectors

Model (CTN) No. ALP-600

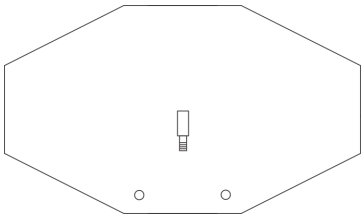

**Antenna Cables**
Special low loss antenna
cables with TNC Connectors

| Model No. | Length |
|---|---|
| CXU-10 | 10 ft. (3 m) |
| CXU-25 | 25 ft. (7.6 m) |
| CXU-50 | 50 ft. (15 m) |
| CXU-75 | 75 ft. (23 m) |
| CXU-100 | 100 ft.(30 m) |

**APS1 COMB_SPLT**

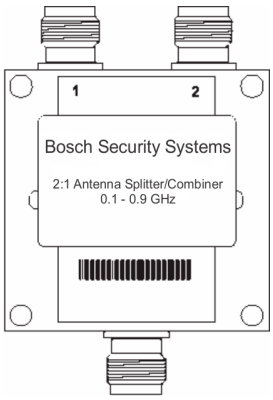


Model (CTN) No. APS1 COMB_SPLT

**AB-2**

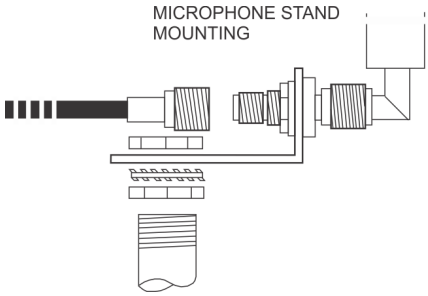


Bracket for 1/2 wave antenna with 10 ft. of coax

Model (CTN) No. AB-2

**BTR Power Cords**

| | |
|---|---|
| North America | Model (CTN) No. PC-USA |
| U.K. | Model (CTN) No. PC-UK |
| European | Model (CTN) No. PC-EURO |

**BTR Intercom Dummy Load**

| | |
|---|---|
| Telex type | Model (CTN) No. TP-3 |
| RTS type | Model (CTN) No. TP-3R |

| | |
|---|---|
| **2TX80N Dual transmit connector kit for BTR-30N** | Model (CTN) No. 2TX80N-KIT |
| **SA Relay plug adapter** | CONN, PCB 2-PIN 2MM, BLK, Printed 1-2 2862046 |
| **DC-LP Locking D.C. plug** | Plug D.C. 5.5 X 2.5 650102 |
| **BLC, BTR-30N Link Cable** | Model (CTN) No. BLC |
| **CTC, BTR-30N** CAN BUS Termination Cable | Model (CTN) No. CTC |
| **CTC, BTR-30N** CAN BUS 120 Ω Termination | Model (CTN) No. CAN-T |
| **BP-700 TR Battery pack, alkaline** (batteries not included) | Model (CTN) No. BP-700 |
| **BP-800NM** Rechargeable 2200mAhr Nickel-Metal hydride battery pack | Model (CTN) No. BP800NM |

**BC-800 NM4** 4-Slot Smart Charger with four (4) BP-800NM battery packs

| | |
|---|---|
| North America | Model (CTN) No. BC800NM4 |
| Euro | Model (CTN) No. BC800NM4E |

**BC-800NM** Single-slot Smart Charger with BP-800NM battery pack

| | |
|---|---|
| North America | Model (CTN) No. BC800NM |
| Euro | Model (CTN) No. BC800NME |

## Beltpack: 1/4 - Wave UHF Antenna

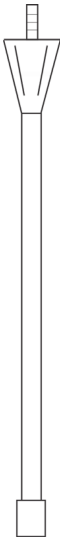

| Model (CTN) No. | Band Color | Frequency Coverage of Antenna | Frequency Band Designators | | | | |
|---|---|---|---|---|---|---|---|
| | | | F | H | A | B | C |
| BPA-2 | Black | 485.0 - 553.9 MHz | X | X | X | X | |
| BPA-3 | Yellow | 554.0 - 635.9 MHz | | | | | X |

## Base Station: Flexible Ground Independent UHF Dipole Antenna

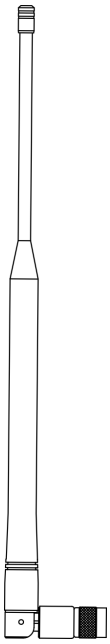

| Model (CTN) No. | Band Color | Frequency Coverage of Antenna | Frequency Band Designators | | | | |
|---|---|---|---|---|---|---|---|
| | | | F | H | A | B | C |
| FA-RW-RS | Red/White | 470 - 550 MHz | X | X | X | | |
| FA-YW-RS | Yellow/White | 525 - 610 MHz | | | | X | X |

## Beltpack: Rubber duck VHF antenna

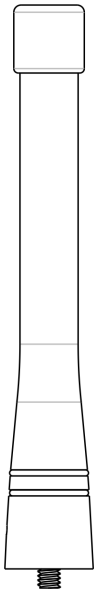

| Model No. | Band Color | Frequency Coverage of Antenna | Frequency Band Designators | |
|---|---|---|---|---|
| | | | 10 | 13 |
| TR-30N/32N VHF Low Band | Brown | 174-198 MHz | X | |
| TR-30N/32N VHF High Band | Orange | 192-216 MHz | | X |

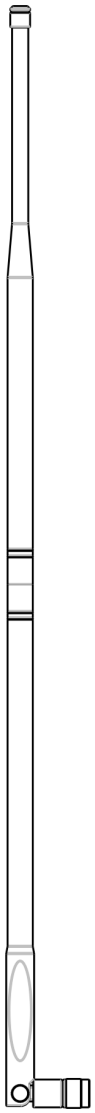

## Base Station: End-fed 1/2-wave VHF antenna

| Model (CTN) No. | Band Color | Frequency Coverage of Antenna | Frequency Band Designators | |
|---|---|---|---|---|
| | | | 10 | 13 |
| BTR-30N VHF Low Band | Brown/White | 174-198 MHz | X | |
| BTR-30N VHF High Band | Orange/White | 192-216 MHz | | X |

**Bosch Security Systems, Inc.**
12000 Portland Avenue South
Burnsville, MN 55337 U.S.A.
www.boschcommunications.com