SIGMA

J E D F N Es I S Dk Cs Ct K R P

729170402

100-400mm F5-6.3 DG OS HSM

Contemporary 017

使用説明書
INSTRUCTIONS
BEDIENUNGSANLEITUNG
MODE D'EMPLOI
GEBRUIKSAANWIJZING
INSTRUCCIONES
ISTRUZIONI PER L'USO
BRUKSANVISNING
BRUGSANVISNING
用户手册
用戶手冊
사용자 설명서
РУКОВОДСТВО ПО ЭКСПЛУАТАЦИИ
MANUAL DE INSTRUÇÕES

SIGMA CORPORATION
2-4-16 Kurigi, Asao-ku, Kawasaki-shi, Kanagawa 215-8530 Japan
Phone : (81) - 44 - 989 - 7437 Fax : (81) - 44 - 989 – 7448

製品のお問い合わせは…
シグマ カスタマーサポート部 フリーコール： **0120-9977-88**
（携帯電話・PHS をご利用の方は 044-989-7436 にご連絡ください）
サポート・インターネットページアドレス
http://www.sigma-photo.co.jp/support/index.htm

株式会社シグマ
本 社
〒215-8530 神奈川県川崎市麻生区栗木 2 丁目 4 番 16 号
☎(044) 989 - 7430 (代) FAX: (044) 989 - 7451
インターネットホームページアドレス **http://www.sigma-photo.co.jp**

(A)

D5, D4S, Df, D810, D810A, D750, D610, D500, D7200, D7100, D5500, D5300, D5200, D5100, D5000, D3400, D3300, D3200, D3100
★ D4, D3X, D3S, D3, D800, D800E, D700, D600, D300S, D300, D7000

(B)

D2XS, D2X, D2HS, D2H, D1X, D1H, D1, D200, D100, D90, D80, D70S, D70, D60, D50, D40X, D40, D3000

(1)

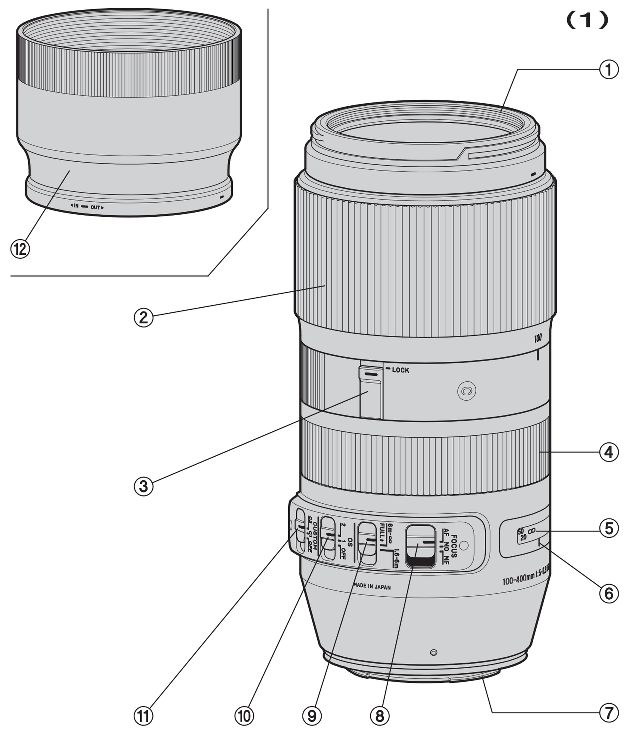

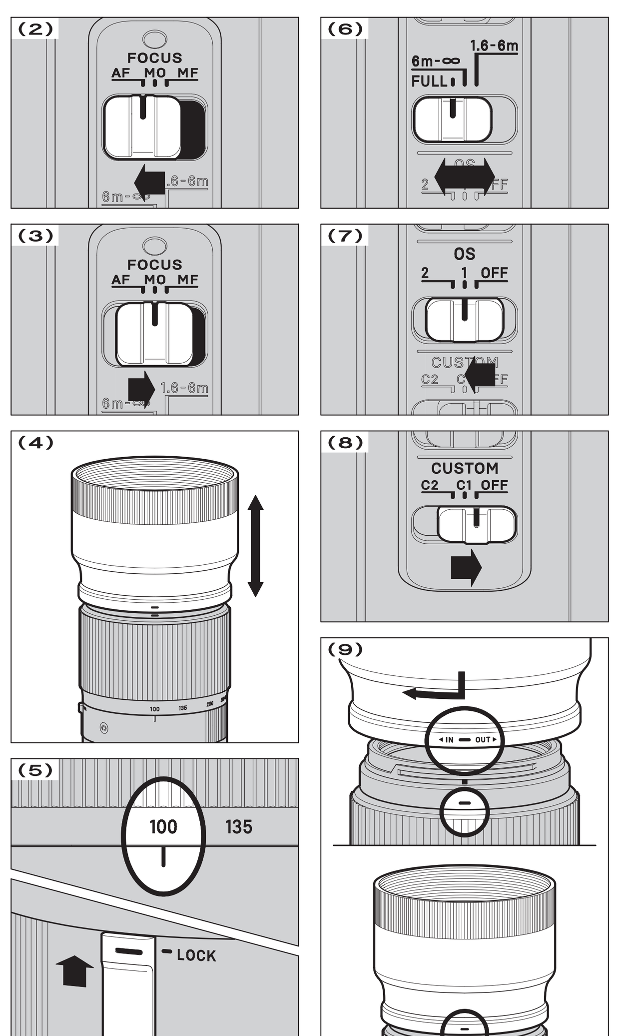

N73

This device complies with Part 15 of the FCC Rules. Operation is subject to the following two conditions: (1) this device may not cause harmful interference, and (2) this device must accept any interference received, including interference that may cause undesired operation.

J CE マークは、この製品が EC 指令に適合していることを示しています。
E The CE Mark is a Directive conformity mark of the European Community (EC).
D Die CE-Kennzeichnung ist eine Konformitätserklärung des Herstellers, die dokumentiert, daß das betreffende Produkt die Anforderungen von EG-Richtlinien einhält.
F Le label CE garantit la conformité aux normes établies par la Communauté Européenne.
N Het CE teken is een aanduiding voor de Europese Gemeenschap (EC).
Es El logotipo CE es una directiva de conformidad con la Comunidad Europea (CE).
I Questo è il marchio di conformità alle direttive della comunità Europea (CE).
S CE-märket betyder att varan blivit godkänd av EU:s gemensamma kvalitetsnorm.
Dk CE-mærket er i overensstemmelse med de gældende regler i EU.
P A marca CE garante a conformidade com as normas estabelecidas pela Comunidade Europeia

SIGMA (Deutschland) GmbH Carl-Zeiss-Str. 10/2, D-63322 Rödermark, F.R.GERMANY
Verkauf: 01805-90 90 85-0 Service: 01805-90 90 85-85 Fax: 01805-90 90 85-35

SIGMA CORPORATION
2-4-16 Kurigi, Asao-ku, Kawasaki-shi, Kanagawa 215-8530 Japan
Phone : (81)-44-989-7437 Fax : (81)-44-989-7448

ENGLISH

Thank you very much for purchasing a Sigma Lens. In order to get the maximum performance and enjoyment out of your Sigma lens, please read this instruction booklet thoroughly before you start to use the lens.

DESCRIPTION OF THE PARTS (fig.1)

① Filter Attachment Thread ② Zoom Ring ③ Zoom Lock Switch ④ Focus Ring ⑤ Distance Scale ⑥ Focus Index Line ⑦ Mount ⑧ Focus Mode Switch ⑨ Focus Limiter Switch ⑩ OS Switch ⑪ Custom Mode Switch ⑫ Lens Hood

FOR NIKON MOUNT

This lens includes an electromagnetic diaphragm mechanism, the same specifications as the E-type mechanism in Nikon AF lenses. The lens is compatible with the cameras listed in Table **(A)**. (The models with the ★ mark require the latest version of the camera firmware to ensure compatibility.)

- ◆It is not compatible with film single-lens reflex cameras.
- ◆It is not possible to use the lens with the cameras in Table **(B)**.
- ◆For models not listed in Table **(A)** or Table **(B)**, please refer to the camera's instruction manual to check for compatibility of E-type lenses.

ATTACHING TO THE CAMERA BODY

When this lens is attached to the camera body it will automatically function in the same way as the camera manufacturer's lens. Please refer to the instruction booklet for your camera body.

- ◆On the lens mount surface, there are a number of couplers and electrical contacts. Please keep them clean to ensure proper connection. While changing the lens, be sure to place it front end down to avoid damaging the rear mount.

SETTING THE EXPOSURE MODE

The Sigma lens functions automatically once attached to the camera. Please refer to the camera instruction book.

FOCUSING AND ZOOMING

For autofocus operation, set the focus mode switch on the lens to the "**AF**" position (fig.2). If you wish to focus manually, set the focus mode switch on the lens to the "**M**" position. You can adjust the focus by turning the focus ring.

- ◆Please refer to camera's instruction manual for details on changing the camera's focusing mode.
- ◆When operating this lens in manual focus mode, it is recommended that correct focus be confirmed visually in the viewfinder rather than relying on the distance scale.

This lens also permits manual focusing even in the autofocus mode. With the camera set to the One-Shot AF (AF-S) mode, it is possible to manually override the autofocus while the shutter release button is pressed halfway.

Also, this lens can offer [Full-time MF function] (**M**anual **O**verride) by rotating the focus ring of the lens while auto focusing is in operation. For For Full-time MF, set the focus mode switch on the lens to the "**MO**" position (fig.3).

- ◆When using USB DOCK (sold separately) and its dedicated software, "SIGMA Optimization Pro", it is possible to select Full-time MF function ON / OFF, You can also adjust the amount of ring rotation to operate Full-time MF function. For further information, please refer to the SIGMA Optimization Pro "Help" menu.

《ZOOMING》

Rotate the Rubber grip on the zoom ring to the desired position.

- ◆It is possible to operate the push/pull zoom by holding the lens hood when it is attached (fig.4).

《ZOOM LOCK SWITCH》

This lens is also equipped with Zoom Lock Switch to eliminate the zoom creep when the lens is tilted down. Please set zooming ring to **100**mm and set the zoom lock switch to the "**LOCK**" position. (fig.5)

FOCUS LIMITER SWITCH

This lens is equipped with the focus limiter switch, which enables a limit of the AF range (fig.6). It is possible to switch to the following three modes.

●**FULL** (1.6m~∞) (5.25ft~∞) ●6m~∞ (19.7ft~∞) ●1.6~6m (5.25~19.7ft)

ABOUT OS (OPTICAL STABILIZER) FEATURES

This OS (Optical Stabilizer) lens effectively compensates for image blurring caused by camera shake.

Set the **OS** (Optical Stabilizer) switch to Mode **1** (fig.7). Press the shutter button halfway down, confirm the image in the viewfinder is stable then take the picture. (It takes approximately 1 second to produce a stable image, after pressing the shutter button halfway). Mode **2**, detects the vertical camera shake, and overcomes blurring. It is effective on subjects moving horizontal to the camera.

- ◆Please do not use Optical Stabilizer in the following situations.
  ●When the lens is mounted on a tripod. ●Bulb (long time exposure).
- ◆Optical Stabilizer function is powered from the camera. If the OS lens is attached to your camera and activated, shooting capacity of your camera will be lower than with conventional lenses used with the same camera. If you are not using Optical Stabilizer, please turn **OFF** the **OS** switch, in order to prevent consumption of a battery.
- ◆Be sure to turn of **OS** switch to **OFF** position, before attaching or detaching the lens to the camera.
- ◆The Optical Stabilizer continues to operate after you release your finger from the shutter button, as long as the exposure meter displays the exposure value. Never remove the lens or remove the camera's battery while the image stabilizer is operating, you could damage the lens.
- ◆Although the viewfinder image may appear to shake immediately after shooting and at the start of the flash charge cycle of the built-in flash of the camera etc., it will not cause any effect on pictures.
- ◆If the camera power is turned off or lens is detached while the Optical Stabilizer function is in operation, the lens may emit a chattering noise, but this is not a malfunction.
- ◆For Canon mount, the Optical Stabilizer (OS) function will not work with film SLR cameras except the Canon EOS-1V.

CUSTOM MODE SWITCH

By using USB DOCK (sold separately) and its dedicated software, SIGMA Optimization Pro, it is possible to customize the AF speed, OS effect and range of Focus Limiter of the lens, and the setting can be saved with the Custom Mode Switch. For further information, please refer to the SIGMA Optimization Pro "Help" menu.

- ◆For your regular use, please turn off the Custom Mode Switch. The Focus Limiter Switch does not function when the custom mode is ON and set as **C1** or **C2** (fig.8).
- ◆USB DOCK is dedicated for each mount. Please use a USB DOCK which corresponds to your lens mount. USB DOCK for different mounts cannot be used.
- ◆SIGMA Optimization Pro can be downloaded free of charge from the following website: **http://www.sigma-global.com/download/**
- ◆With this lens, the difference between [**Smooth AF Priority**] and [**Standard AF**] in [**AF SPEED SETTING**] is small.

ABOUT TELE CONVERTERS

This lens can be used as a 1.4x (140-560mm F7-9) or a 2x (200-800mm F10-12.6) hyper-telephoto zoom lens by attaching SIGMA TELE CONVERTER TC-1401 or SIGMA TELE CONVERTER TC-2001 respectively. (Both can be used in manual focus only.)

- ◆Do not use other manufacturers' teleconverter's, only those listed above are compatible.
- ◆When SIGMA TELE CONVERTER TC-1401 is attached to cameras that are compatible with AF at F8, it is possible to shoot with AF. (Focus accuracy is not ensured when the focal length scale is more than 200mm.)

LENS HOOD

A bayonet type detachable `hood is provided with the lens. This lens hood helps to prevent flare and ghosted images caused by extraneous light. Attach the hood and turn clockwise until it stops rotating. (fig.9)

- ◆In order to place the lens and hood into the storage case, you must first remove the hood, then replace it on the lens in the reverse position.

FILTER

- ◆When using a polarizing filter with an AF camera, use the "circular" type.

BASIC CARE AND STORAGE

- ◆Avoid any shocks or exposure to extreme high or low temperatures or to humidity. For extended storage, choose a cool and dry place, preferably with good ventilation. To avoid damage to the lens coating, keep away from mothballs or naphthalene gas.
- ◆Do not use thinner, benzine or other organic cleaning agents to remove dirt or finger prints from the lens elements. Clean by using a soft, moistened lens cloth or lens tissue.
- ◆This lens is not waterproof. When using the lens in the rain or near water, prevent it from getting wet. It is often impractical to repair the internal mechanism, lens elements and electric components damaged by water.
- ◆Sudden temperature changes may cause condensation or fog to appear on the surface of the lens. When entering a warm room from the cold outdoors, it is advisable to keep the lens in the case until the temperature of the lens approaches room temperature.

TECHNICAL SPECIFICATIONS

Lens construction	15 – 21
Angle of View	24.4 – 6.2°
Minimum Aperture	22
Minimum Focusing Distance	1.6m(5.25ft)
Magnification	1:3.8

Filter Size	67mm
Dimensions Dia.×Length	86.4 x 182.3mm (3.4×7.18in)
Weight	1160g (40.92oz)

- ◆Dimensions and weight include the SIGMA mount.
- ◆The glass materials used in the lens do not contain environmentally hazardous lead and arsenic.