INSTALLATION INSTRUCTIONS

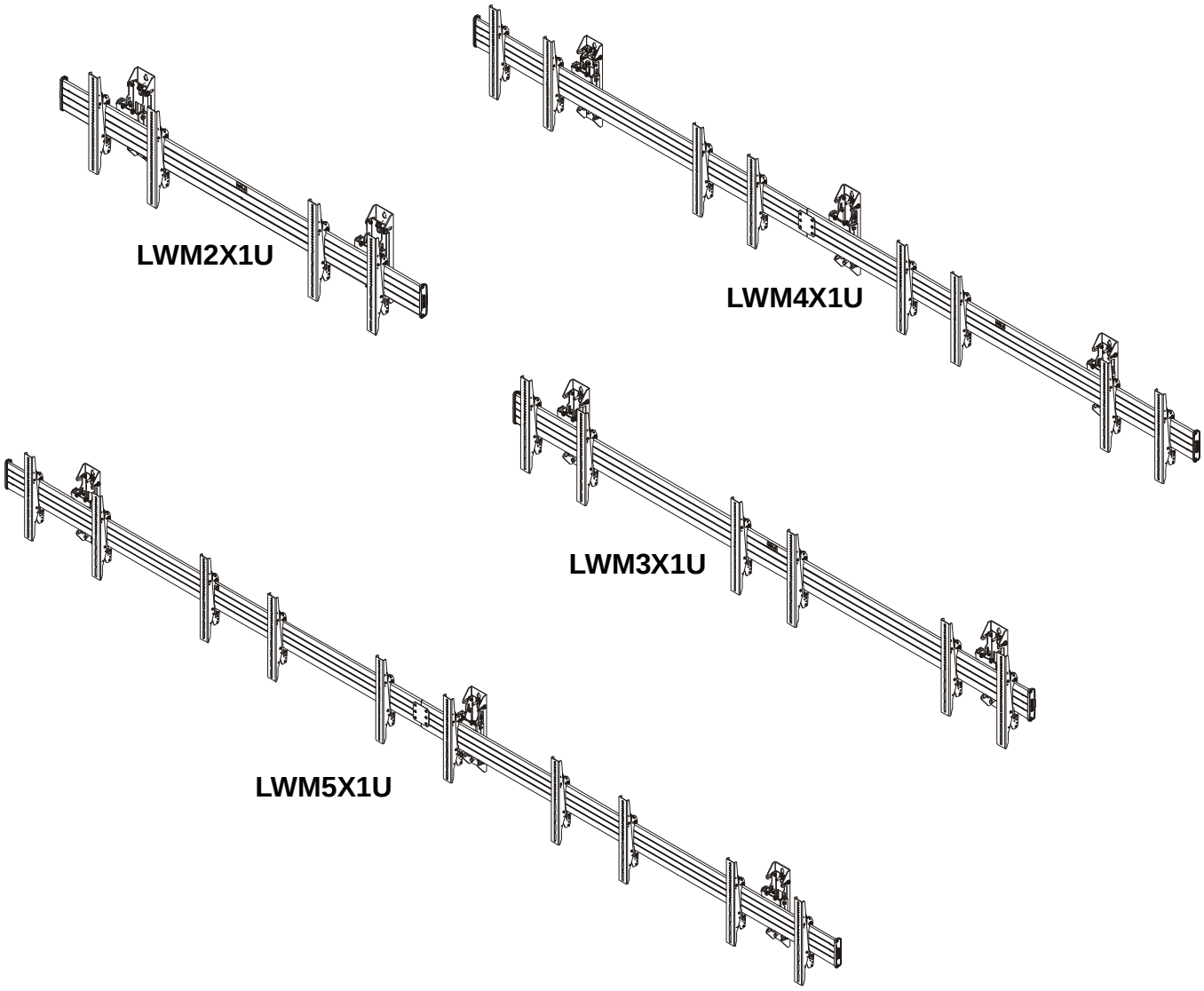

Wall-Mounted Menu Boards

CHIEF®
Our Mounts. **Your Vision.**

LWM Series

DISCLAIMER

Milestone AV Technologies and its affiliated corporations and subsidiaries (collectively “Milestone”), intend to make this manual accurate and complete. However, Milestone makes no claim that the information contained herein covers all details, conditions or variations, nor does it provide for every possible contingency in connection with the installation or use of this product. The information contained in this document is subject to change without notice or obligation of any kind. Milestone makes no representation of warranty, expressed or implied, regarding the information contained herein. Milestone assumes no responsibility for accuracy, completeness or sufficiency of the information contained in this document.

Chief® is a registered trademark of Milestone AV Technologies. All rights reserved.

DEFINITIONS

MOUNTING SYSTEM: A MOUNTING SYSTEM is the primary Chief product to which an accessory and/or component is attached.

ACCESSORY: AN ACCESSORY is the secondary Chief product which is attached to a primary Chief product, and may have a component attached or setting on it.

COMPONENT: A COMPONENT is an audiovisual item designed to be attached or resting on an accessory or mounting system such as a video camera, CPU, screen, display, projector, etc.

WARNING: A WARNING alerts you to the possibility of serious injury or death if you do not follow the instructions.

CAUTION: A CAUTION alerts you to the possibility of damage or destruction of equipment if you do not follow the corresponding instructions.

IMPORTANT SAFETY INSTRUCTIONS

WARNING: Failure to read, thoroughly understand, and follow all instructions can result in serious personal injury, damage to equipment, or voiding of factory warranty! It is the installer’s responsibility to make sure all mounting systems are properly assembled and installed using the instructions provided.

WARNING: Failure to provide adequate structural strength for this mounting system can result in serious personal injury or damage to equipment! It is the installer’s responsibility to make sure the structure to which this mounting system is attached can support five times the combined weight of all equipment. Reinforce the structure as required before installing the mounting system.

WARNING: Exceeding the weight capacity can result in serious personal injury or damage to equipment! It is the installer’s responsibility to make sure the combined weight of all components located within the mounting system of the LWM Series mounts does not exceed maximum weights noted in table below.

MODEL	Max Weight Allowed for EACH Display	Max Weight Capacity of Mounting System
LWM2X1U	125 lbs (56.7 kg)	250 lbs (113.4 kg)
LWM3X1U	125 lbs (56.7 kg)	375 lbs (170.1 kg)
LWM4X1U	125 lbs (56.7 kg)	500 lbs (226.8 kg)
LWM5X1U	125 lbs (56.7 kg)	625 lbs (283.5 kg)

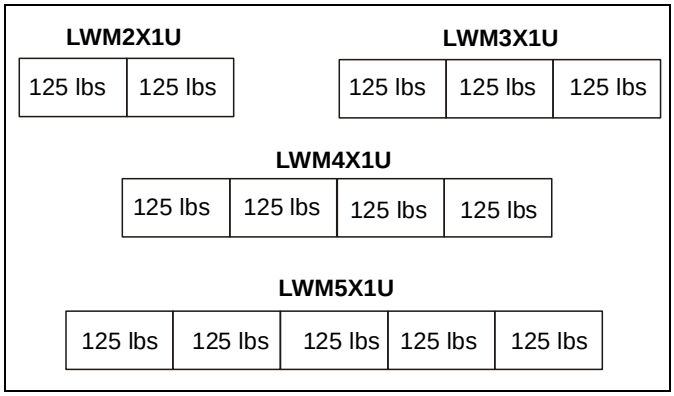

WARNING: Use this mounting system only for its intended use as described in these instructions. Do not use attachments not recommended by the manufacturer.

WARNING: Never operate this mounting system if it is damaged. Return the mounting system to a service center for examination and repair.

WARNING: Do not use this product outdoors.

IMPORTANT ! : The LWM Series mounts are designed to be mounted to a 2" x 4" wood studs (16" on center) wall; or a bare 8" concrete wall. The LWM Series mounts are designed to accept displays in the 40-55" (1016-1397mm) size.

--SAVE THESE INSTRUCTIONS--

LEGEND

	Tighten Fastener Apretar elemento de fijación Befestigungsteil festziehen Apertar fixador Serrare il fissaggio Bevestiging vastdraaien Serrez les fixations
	Loosen Fastener Aflojar elemento de fijación Befestigungsteil lösen Desapertar fixador Allentare il fissaggio Bevestiging losdraaien Desserrez les fixations
	Phillips Screwdriver Destornillador Phillips Kreuzschlitzschraubendreher Chave de fendas Phillips Cacciavite a stella Kruiskopschroevendraaier Tournevis à pointe cruciforme
	Open-Ended Wrench Llave de boca Gabelschlüssel Chave de bocas Chiave a punte aperte Steeksleutel Clé à fourche
	By Hand A mano Von Hand Com a mão A mano Met de hand À la main
	Hex-Head Wrench Llave de cabeza hexagonal Sechskantschlüssel Chave de cabeça sextavada Chiave esagonale Zeskantsleutel Clé à tête hexagonale
	Pencil Mark Marcar con lápiz Stiftmarkierung Marcar com lápis Segno a matita Potloodmerkteken Marquage au crayon
	Drill Hole Perforar Bohrloch Fazer furo Praticare un foro Gat boren Percez un trou
	Adjust Ajustar Einstellen Ajustar Regolare Afstellen Ajuster
	Remove Quitar Entfernen Remover Rimuovere Verwijderen Retirez
OPT	Optional Opcional Optional Opcional Opzionale Optie En option
	Security Wrench Llave de seguridad Sicherheitsschlüssel Chave de segurança Chiave di sicurezza Veiligheidssleutel Clé de sécurité

TOOLS REQUIRED FOR INSTALLATION

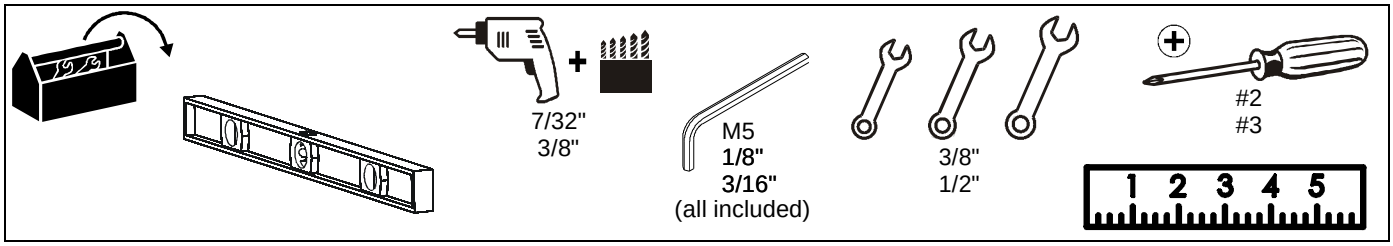

PARTS

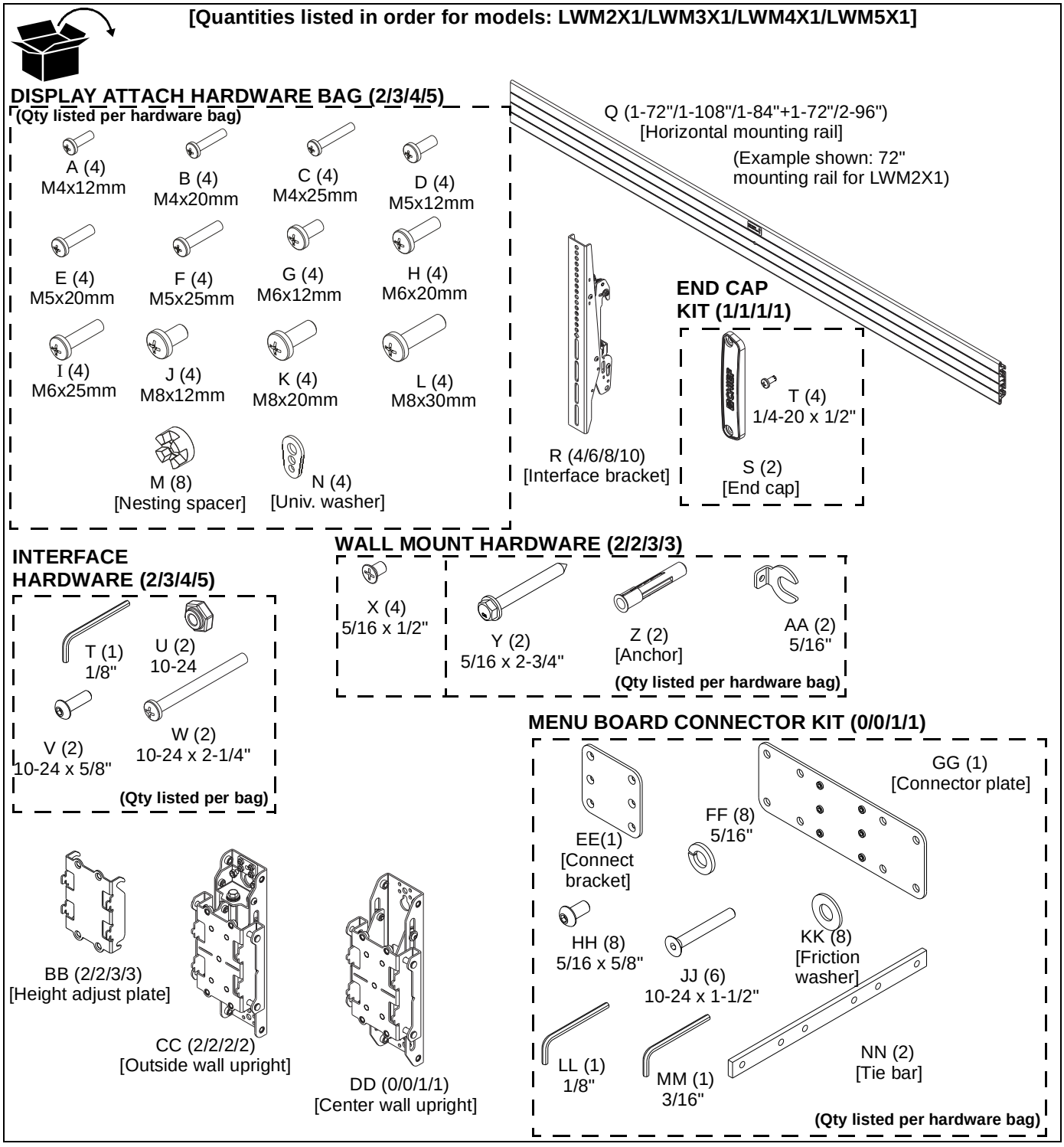

WALL ATTACHMENT INFORMATION

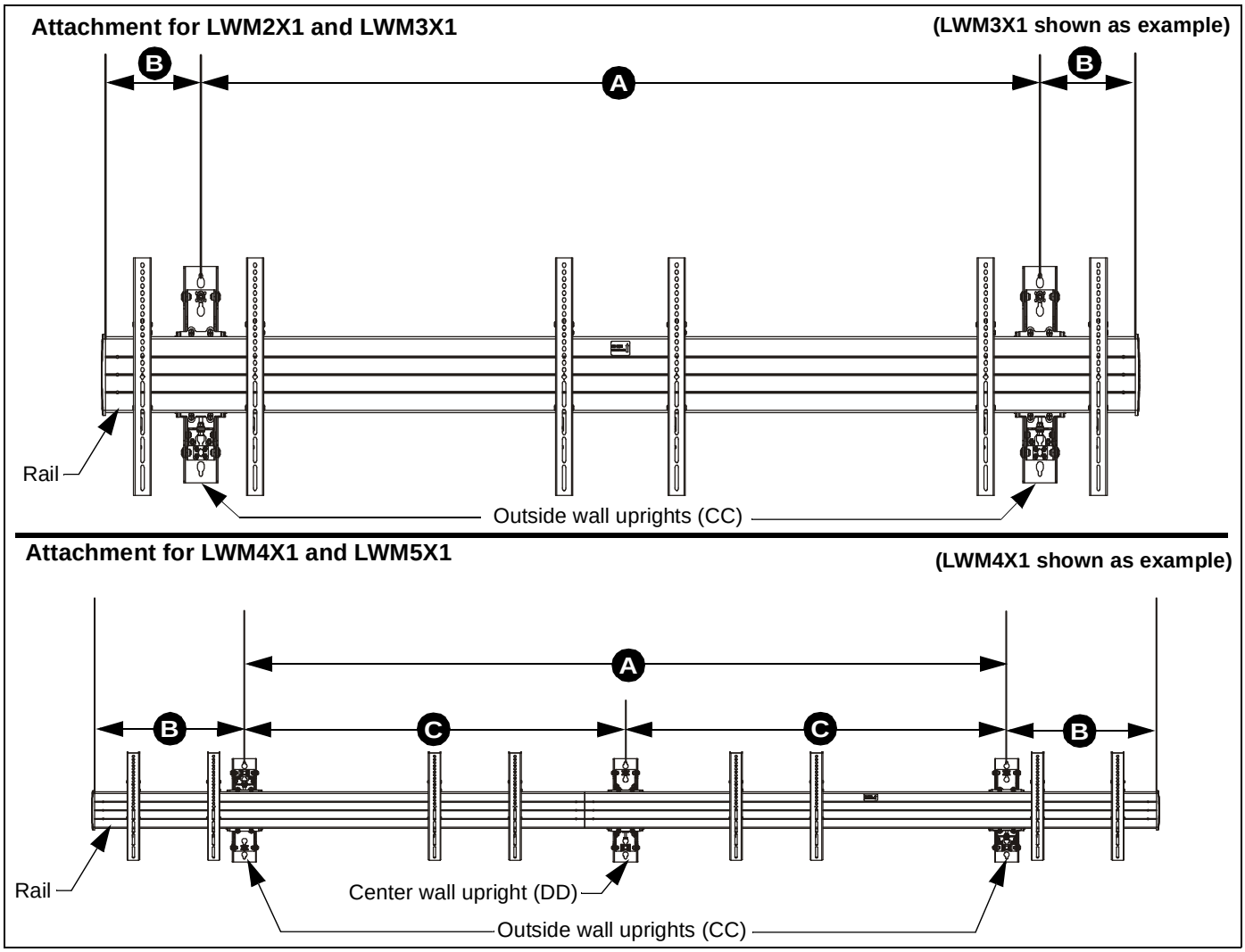

Figure 1

Table 1: Wall Upright Specifications

Model	A (Outside wall upright spacing)	B (End of rail to wall upright)	C (Wall upright spacing from outside to inside)
LWM2X1	48" - 64" (1219 - 1626mm)	"B" dimensions to be as close to equal as possible. **Not to exceed 12" (305mm).**	N/A
LWM3X1	64" - 88" (1626 - 2235mm)	"B" dimensions to be as close to equal as possible. **Not to exceed 22" (559mm).**	N/A
LWM4X1	96" - 128" (2438 - 3251mm)	"B" dimensions to be as close to equal as possible. **Not to exceed 30" (762mm).**	Center wall upright is to be centered as much as possible so that "C" dimensions are as close to equal as possible
LWM5X1	128" - 160" (3251 - 4064mm)	"B" dimensions to be as close to equal as possible. **Not to exceed 32" (813mm).**	Center wall upright is to be centered as much as possible so that "C" dimensions are as close to equal as possible

IMPORTANT ! : DO NOT locate any of the wall uprights (CC or DD) directly behind any of the display interface brackets (R).

INSTALLATION

IMPORTANT ! : Refer to **Dimensions** section at end of instructions to find specific LWM wall-mounted menu board dimension requirements **BEFORE** proceeding with installation.

NOTE: The outside wall uprights (CC) ship assembled to allow height adjustment from the bottom. The uprights may be changed to allow height adjustment from above the menu boards. See following instructions for changing the wall uprights.

If leaving wall uprights with height adjustment at the bottom, proceed to **ATTACH WALL UPRIGHTS** section.

Adjusting Wall Uprights

If the installation requires height adjustment from **above** the menu boards, adjust the wall uprights (CC) **BEFORE** attaching uprights to the wall.

IMPORTANT ! : Keep all hardware that is removed during this adjustment process.

1. Remove flanged nut and washer from top of wall upright. (CC) (See Figure 2)
2. Remove hex head screw from bottom of wall upright.

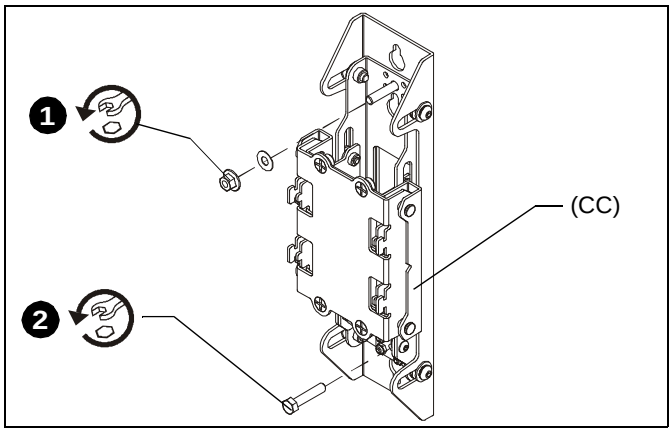

Figure 2

3. Remove one button head screw, spring washer and flat washer from four locations on side of wall upright. (See Figure 3)

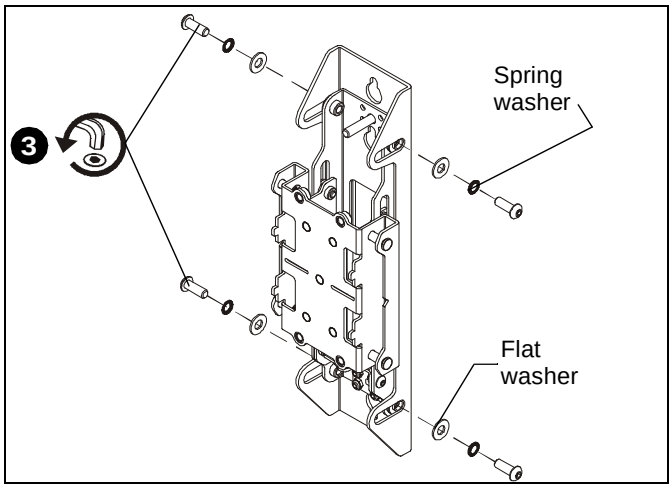

Figure 3

4. Remove wall upright assembly from outer bracket, while removing one shoulder washer and one steel washer from between outer bracket and wall upright assembly in four locations. (See Figure 4)

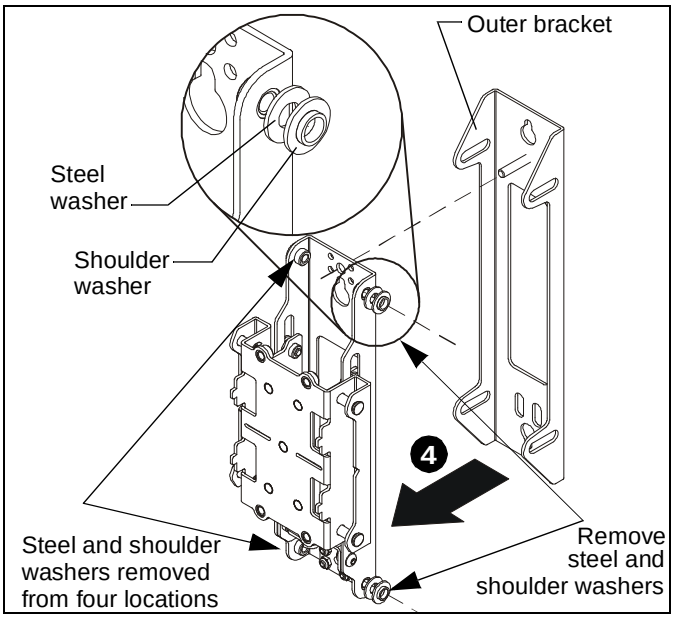

Figure 4

5. Remove four button head screws and nuts, and one small metal plate from lower side within wall upright. (See Figure 5)
6. Reinstall metal plate at top of wall upright using same hardware removed in Step 5. (See Figure 5)

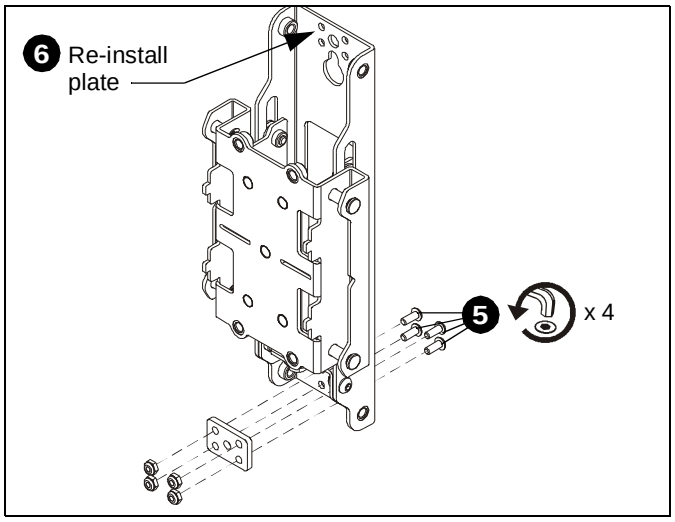

Figure 5

7. Rotate wall assembly so that height-adjust screw is at top of wall upright assembly. (See Figure 6)
8. Insert one shoulder washer and one steel washer between outer bracket and wall upright assembly in four locations.
9. Insert wall upright assembly into outer bracket by placing wall upright assembly onto threaded pem at top of outer bracket.

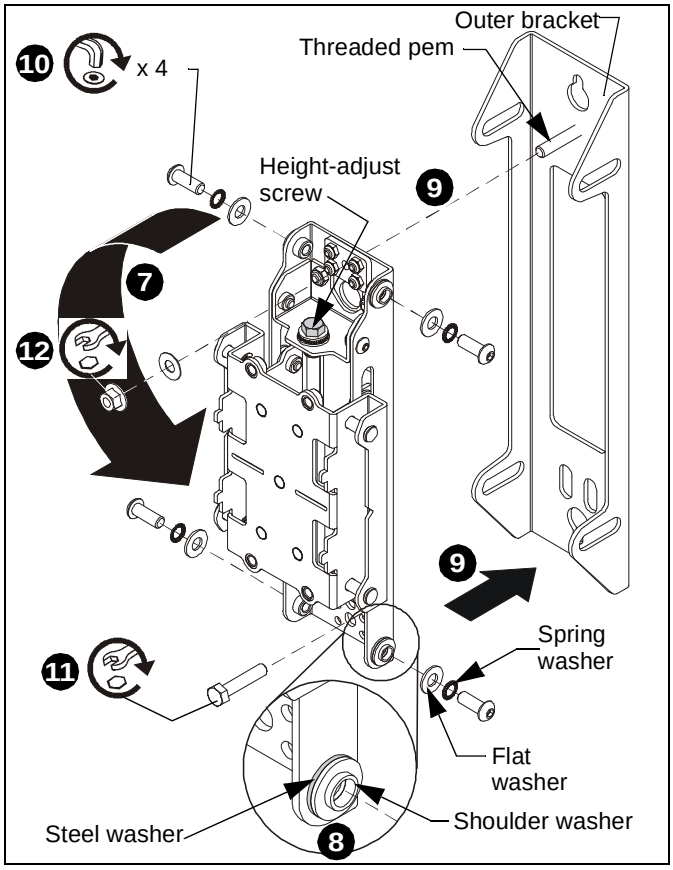

Figure 6

10. Fasten one button head screw, spring washer and flat washer into four locations on sides of wall upright.
11. Fasten hex head screw into bottom of wall upright.
12. Replace and tighten flanged nut and washer onto threaded pem at top of wall upright. (See Figure 6)

Attach Wall Uprights

IMPORTANT ! : Reference **Wall Placement Information** section (See Figure 1) and Table 1.

1. Use the outside wall upright (CC) or center wall upright (DD) as a model to mark upper and lower pilot hole placement for 2 outside wall uprights (and center wall upright for LWM4X1 or LWM5X1 models) following wall placement information in Figure 1 and Table 1. (See Figure 7)

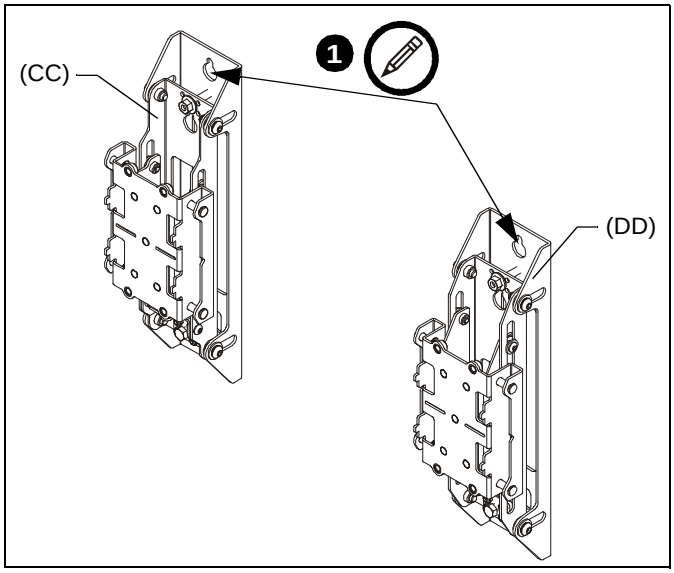

Figure 7

IMPORTANT ! : See **Parts** drawing, Table 2 and **Installing to Wood Stud Walls** or **Installing to Concrete Walls** section for details on installing wall brackets into wood studs or concrete.

Table 2: Fastener Information

WALL TYPE	PILOT HOLE	FASTENERS (see PARTS drawing)
Wood stud (2" x 4")	7/32" x 3"	**5/16 x 2-3/4" hex head lag (Y) & 5/16" slotted washer (AA)**. Fasteners placed **at stud locations**. Refer to **Table 1** for proper spacing for each model.
Concrete	3/8" x 3"	**5/16 x 2-3/4" hex head lag (Y) & Fischer UX10x60 anchor (Z).** Refer to **Table 1** for proper spacing for each model.

Installing to Wood Stud Walls

1. Drill one 7/32" (5.5mm) pilot hole in stud at upper mounting slot. (See Figure 8)
2. Partially install one 5/16 x 2-3/4" flanged lag bolt (Y) into pilot hole but do not tighten to wall.
3. Hang outside wall upright (CC) [or center wall upright (DD)] aligning upper mounting slot over lag bolt and level upright.
4. Place one slotted washer (AA) over flanged lag bolt. (See Figure 8)
5. Tighten lag bolt to secure wall upright (CC or DD) to wall at upper mounting slot. (See Figure 8)

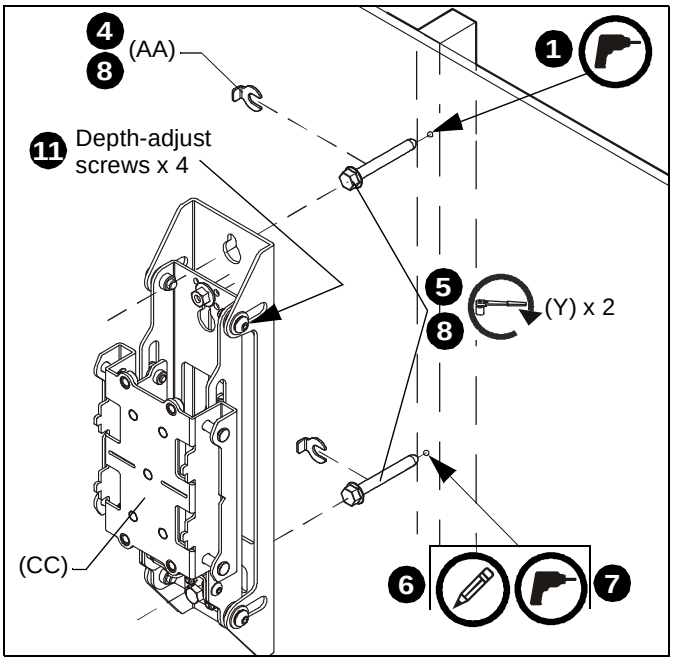

Figure 8

6. Mark the attachment point for the lower mounting slot, making sure the attachment point is located on the stud. (See Figure 8)
7. Drill 7/32" (5.5mm) pilot hole at marking for lower mounting hole. (See Figure 8)
8. Use one 5/16 x 2-3/4" flanged lag bolt (Y) and one 5/16" slotted washer (AA) to attach each wall upright to the wall through the lower mounting hole. (See Figure 8)
9. Repeat Steps 1 through 8 for remaining wall upright(s).
10. Adjust depth of wall uprights, if necessary, so that the face of the wall uprights are all in the same plane across the width of wall upright installation: (See Figure 8)
    - Loosen button head screws (4 places)
    - Adjust depth along depth-adjust slots.
    - Tighten button head screws.

IMPORTANT ! : Be sure to securely tighten depth-adjust screws after adjustment.

11. Proceed to **Attach Mounting Rail** section.

Installing to Concrete Walls

1. Drill one 3/8" x 3-1/2" (9.5mm x 88.9mm) pilot hole at each marking. (See Figure 9)
2. Install one anchor (Z) into each pilot hole using a hammer, making sure that the anchor is flush with the wall.
3. Partially install one 5/16 x 2-3/4" flanged lag bolt (Y) into pilot hole but do not tighten to wall.
4. Hang outside wall upright (CC) [or center wall upright (DD)] aligning upper mounting slot over lag bolt and level upright.
5. Place one slotted washer (AA) over each flanged lag bolt. (See Figure 9)
6. Tighten lag bolt to secure wall upright (CC or DD) to wall at upper mounting slot.

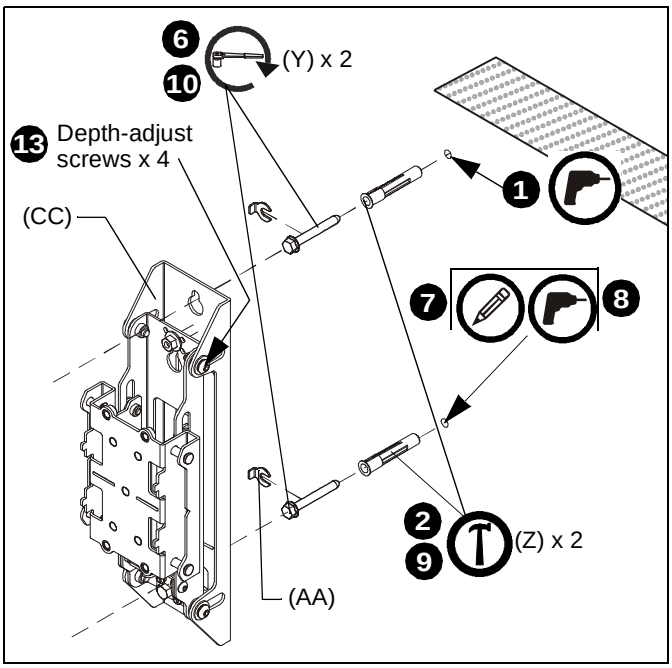

Figure 9

7. Mark the attachment point for the lower mounting slot. (See Figure 9)
8. Drill 3/8" x 3-1/2" (9.5mm x 88.9mm) pilot holes at marking for lower mounting hole. (See Figure 9)
9. Install an anchor (Z) into each pilot hole using a hammer, making sure that the anchor is flush with the wall.
10. Use one 5/16 x 2-3/4" flanged lag bolt (Y) and one 5/16" slotted washer (AA) to attach the wall upright to the wall through the lower mounting hole. (See Figure 9)
11. Repeat Steps 1 through 10 for remaining wall upright(s).
12. Adjust depth of wall uprights, if necessary, so that the face of the wall uprights are all in the same plane across the width of wall upright installation: (See Figure 8)
    - Loosen button head screws (4 places)
    - Adjust depth along depth-adjust slots.
    - Tighten button head screws.

IMPORTANT ! : Be sure to securely tighten depth-adjust screws after adjustment.

ATTACH MOUNTING RAIL

IMPORTANT ! : If installing models LWM2X1 or LWM3X1, **proceed to Step 7.**

LWM4X1/LWM5X1 Models Only

1. Insert two tie bars (NN) into the slots on one section of mounting rail (Q). (See Figure 10)

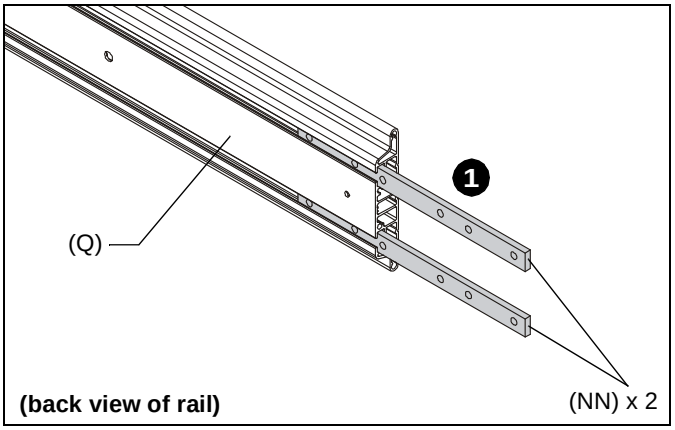

Figure 10

2. Secure connect bracket (EE) to front of mounting rail (Q) using three 10-24 x 1-1/2" flat head cap screws (JJ) fastened through one side of connect bracket, mounting rail, tie bars (NN) and into connector plate (GG). (See Figure 11)

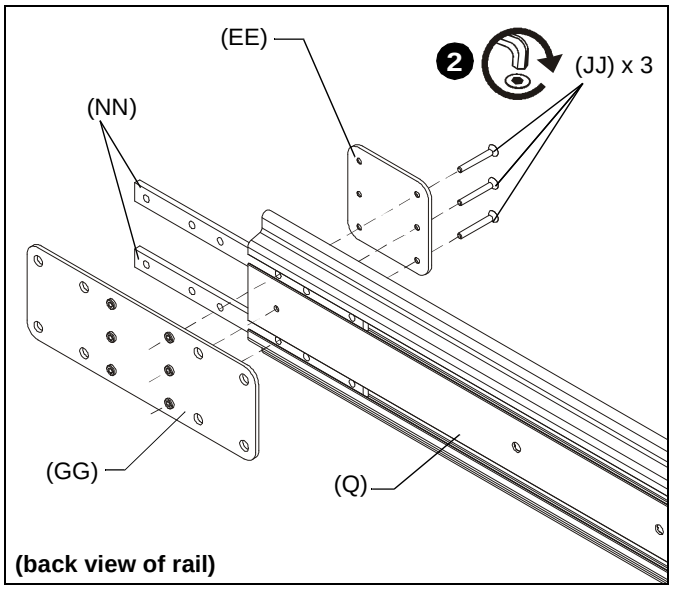

Figure 11

3. Additionally fasten connector plate (GG) using four 5/16 x 5/8" button head cap screws (HH), four 5/16" split washers (FF), and four friction washers (KK). (See Figure 12)

4. Slide second section of mounting rail (Q) over tie bars (NN) and bring it flush to first section of mounting rail. (See Figure 12)

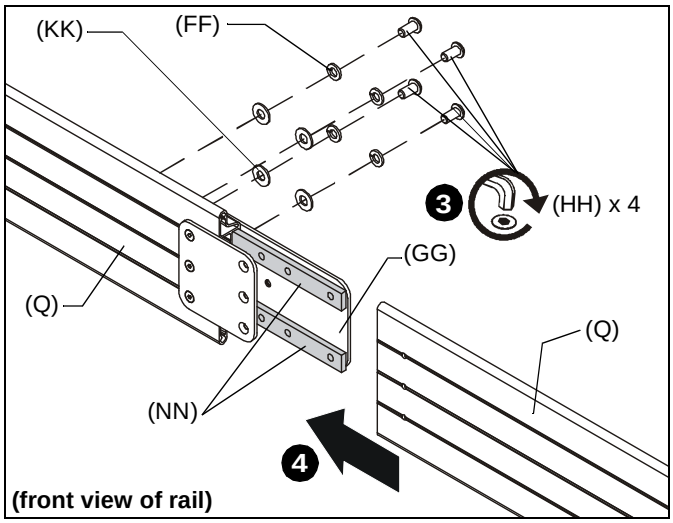

Figure 12

5. Secure connect bracket (EE) to front of second section of mounting rail (Q) using three 10-24 x 1-1/2" flat head cap screws (JJ) fastened through one side of connect bracket, mounting rail, tie bars (NN) and into connector plate (GG). (See Figure 13)

6. Additionally fasten connector plate (GG) using four 5/16 x 5/8" button head cap screws (HH), four 5/16" split washers (FF), and four friction washers (KK). (See Figure 13)

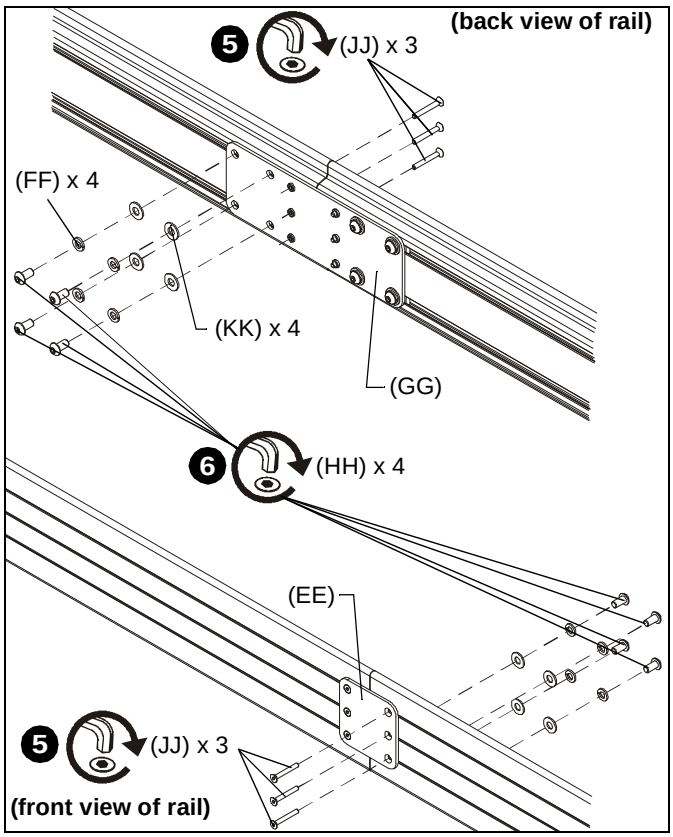

Figure 13

7. Attach one end cap (S) with two 1/4-20 x 1/2" Phillips head screws (T) to end of mounting rail (Q). (See Figure 14)

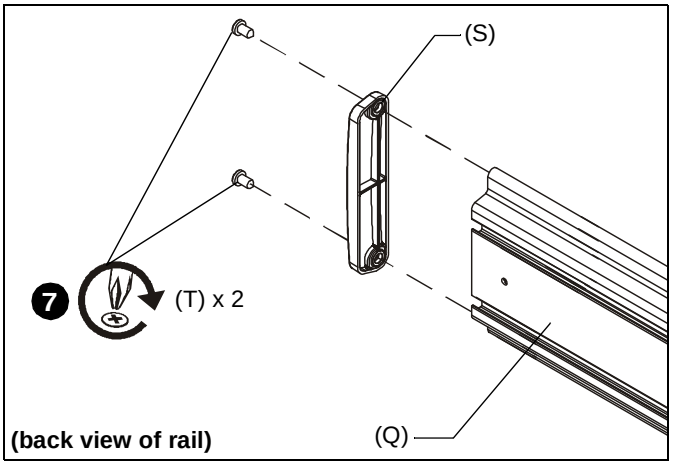

Figure 14

8. Slide height adjust plates (BB) into open end of mounting rail (Q). (See Figure 15)
   - **LWM2X1/LWM3X1**: Insert two plates (BB)
   - **LWM4X1/LWM5X1**: Insert three plates (BB)

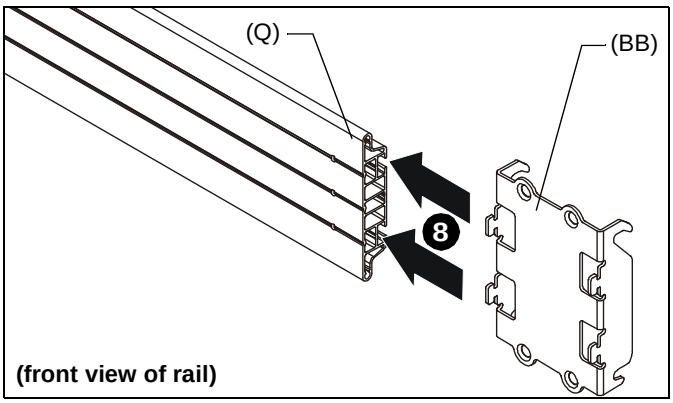

Figure 15

9. Hook height adjust plates (BB) over wall uprights (CC or DD). (See Figure 16)

NOTE: Hook all height adjust plates (BB) over wall uprights (CC or DD), and approximately center mounting rail over the span of the wall uprights (CC or DD) **BEFORE** proceeding to next step.

10. Fasten mounting rail (Q) to wall uprights using four 5/16 x 1/2" Phillips flat head screws (X) through height adjust plate (BB) and into wall uprights (CC or DD) and tighten all screws. (See Figure 16)

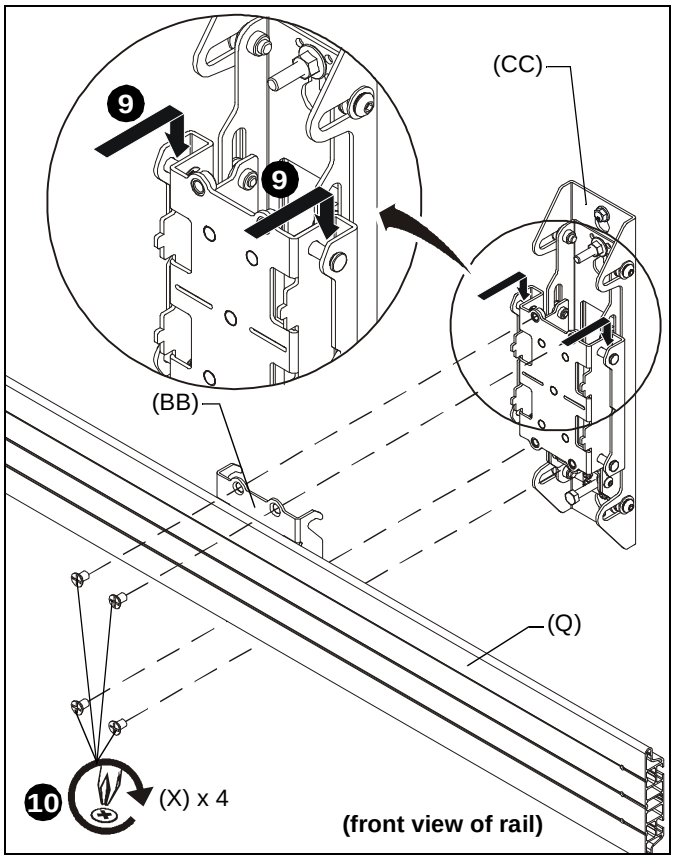

Figure 16

11. Attach one remaining end cap (S) with two 1/4-20 x 1/2" Phillips head screws (T) to end of mounting rail (Q). (See Figure 17)

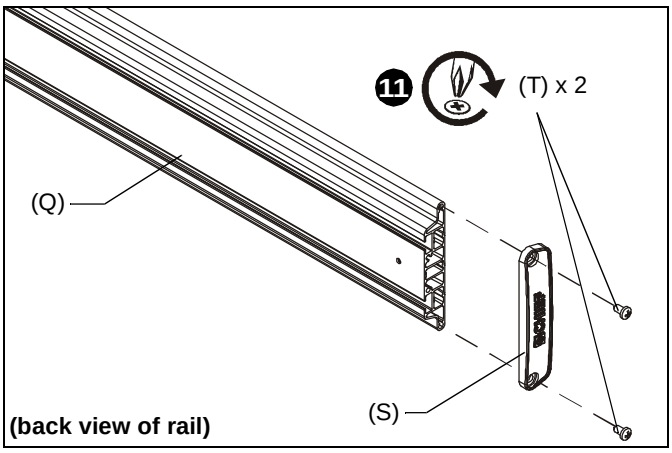

Figure 17

Adjust and Level Mounting Rail

1. Adjust the height of the mounting rail via the wall upright, as necessary, to level the mounting rail on the wall. (See Figure 18)
   - Turn the wall upright height-adjust screw **clockwise** (viewed from bottom) to **raise** the mounting rail.
   - Turn the wall upright height-adjust screw **counter-clockwise** (viewed from bottom) to **lower** the mounting rail.
2. Adjust the depth of the mounting rail via the wall upright, as necessary, to make the mounting rail distance from the wall consistent.
   - Loosen depth-adjust button head screws, and move mounting rail away or toward the wall, as necessary.
   - Tighten depth-adjust button head screws.

IMPORTANT ! : Be sure to securely tighten depth-adjust screws after adjustment.

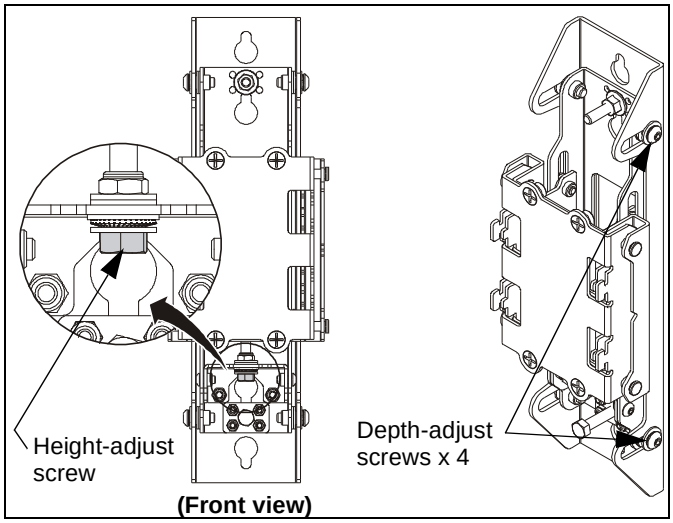

Figure 18

INSTALL INTERFACE BRACKETS TO DISPLAYS

1. Lower the latch mechanism on each interface bracket (R). (See Figure 19)

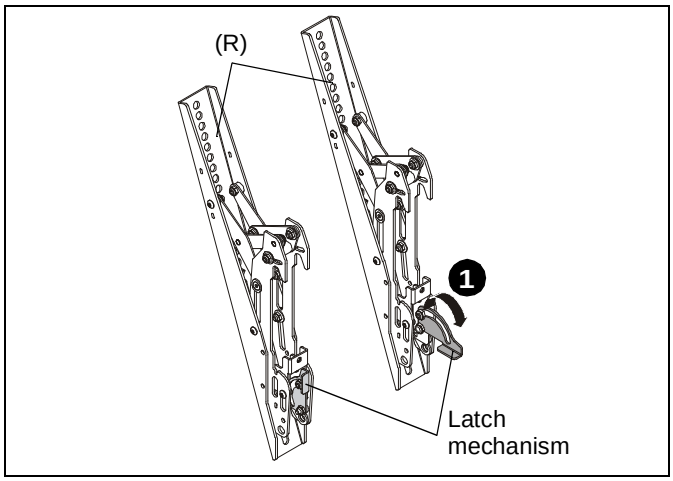

Figure 19

2. Place displays face down on a soft, non-abrasive surface.
3. Align the center of the interface bracket (R) with center of screen. (See Figure 20)

NOTE: The diamond-shape hole in the bracket corresponds to the center of the mount.

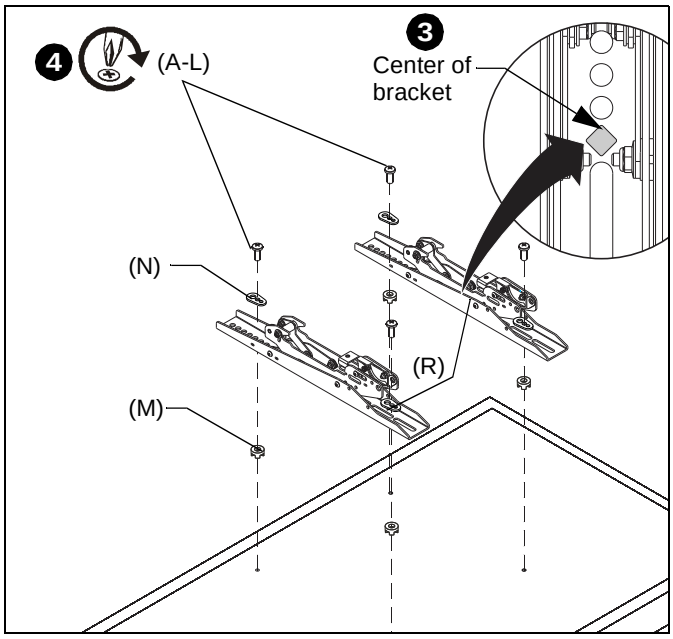

Figure 20

WARNING: IMPROPER INSTALLATION CAN LEAD TO DISPLAY FALLING CAUSING SERIOUS PERSONAL INJURY OR DAMAGE TO EQUIPMENT! Using screws of improper size may damage your display. Properly sized screws will easily and completely thread into display mounting holes. If spacers are required, be sure to use longer screws of the same diameter.

4. Select correct screws, spacers (if necessary) and universal washers from the hardware bag (A-N) and attach brackets (R) to back of screen. (See Figure 20)

IMPORTANT ! : The M8 screws do **NOT** require a washer. Use the universal washer (N) only with M4, M5 and M6 screws.

NOTE: The nesting spacers (M) may be used separately, or put two together in different configurations to create different size spacers. (See Figure 21)

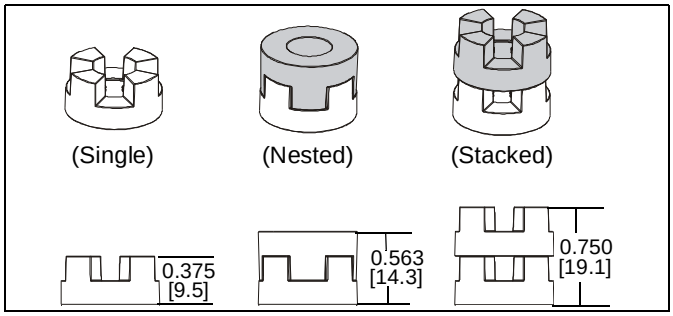

Figure 21

ATTACH DISPLAYS TO MOUNTING RAIL

WARNING: IMPROPER INSTALLATION CAN LEAD TO DISPLAY FALLING CAUSING SERIOUS PERSONAL INJURY OR DAMAGE TO EQUIPMENT! The displays must be located approximately evenly across the length of the rail.

1. Ensure that the latch mechanisms on interface brackets (R) are already lowered. (See Figure 19)
2. While supporting both sides of display, lower display onto one side of mounting rail, hooking top of interface brackets onto front of mounting rail. (See Figure 22)
3. Raise the latch mechanism on both interface brackets to lock bracket in place. (See Figure 22)

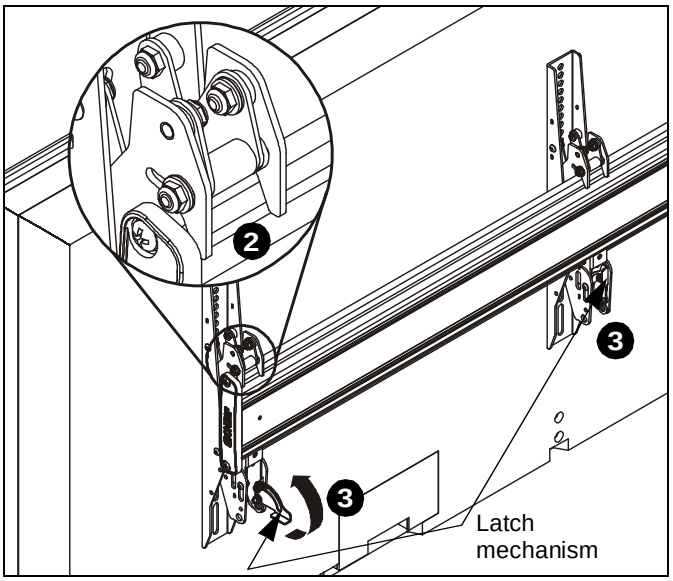

Figure 22

4. Fasten bracket against ceiling mount extrusion using one 10-24 x 5/8" button head cap screw (V). (See Figure 23)
5. Repeat for other interface bracket.

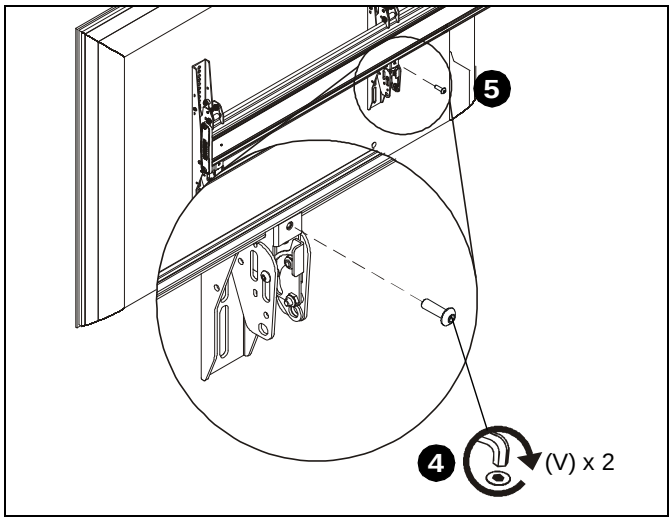

Figure 23

6. While supporting both sides of each remaining display, lower display onto mounting rail, hooking top of interface brackets onto front of mounting rail. (See Figure 22)
7. Repeat Steps 3 through 5 for each additional display.

Interface Bracket Adjustment

Tilt

The interface brackets allow 0° to 20° tilt, and can be locked at 0°, 10° and 20° tilt.

1. If necessary, loosen button head tilt friction bolt (located on side of interface bracket). (See Figure 24)
2. Adjust tilt as required. (See Figure 24)
3. The tilt may be locked at 0°, 10° and 20° using one 10-24 x 2-1/4" Phillips head screw (W) and one 10-24 lock nut (U) per interface bracket. (See Figure 24)
4. Tighten tilt friction bolt as necessary.

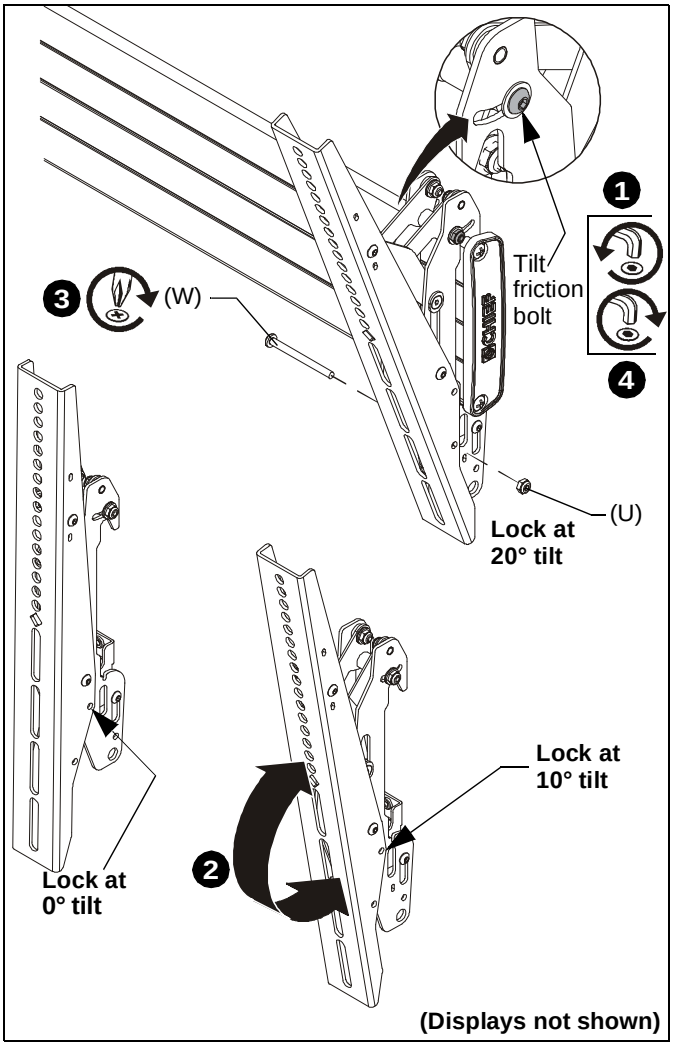

Figure 24

OPTIONAL: Security

1. **OPTIONAL**: Add padlock (not included) to each interface bracket to lock display to menu board. (See Figure 25)

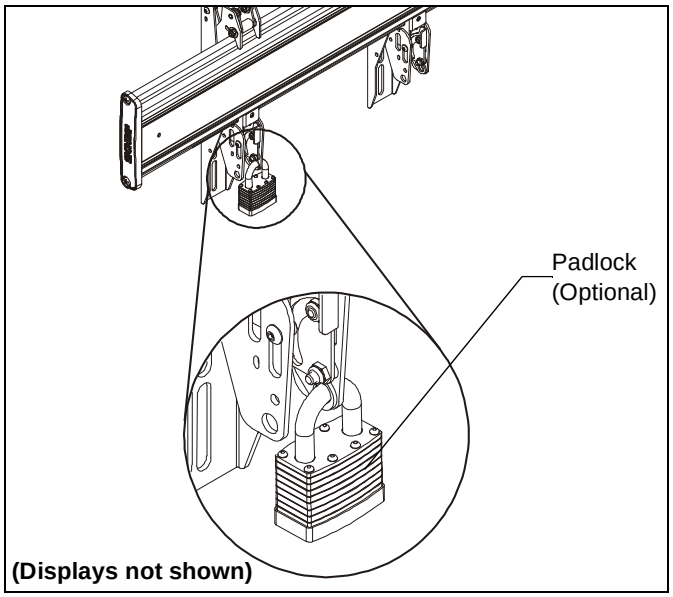

Figure 25

DIMENSIONS

LWM2X1U

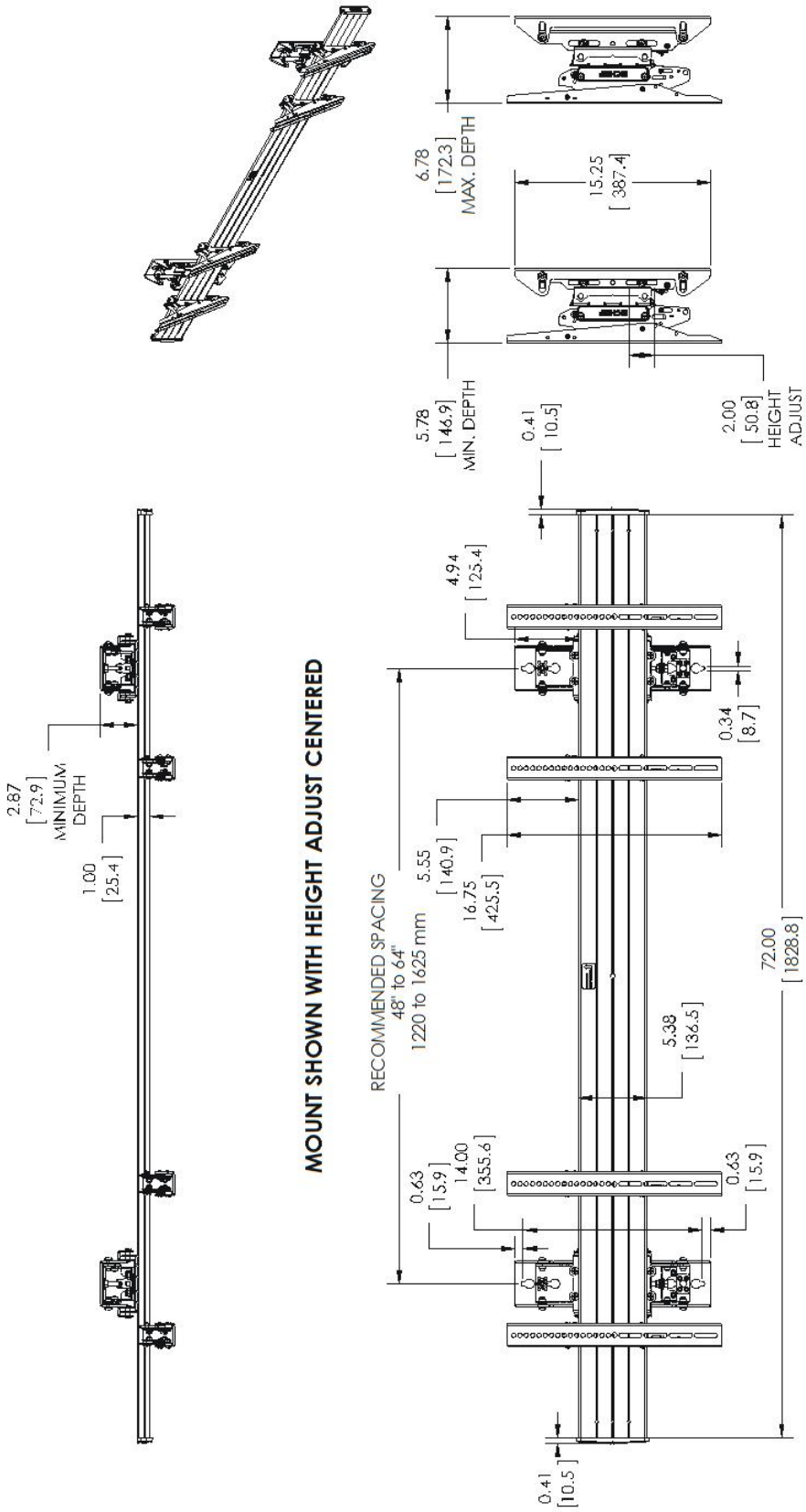

2 WIDE LANDSCAPE				
EXTRUSION LENGTH (IN.)	MINIMUM SCREEN WIDTH TO HIDE BAR (IN.)	MOUNTING PATTERN WIDTH (mm)	DISTANCE BETWEEN SCREENS (IN.)	MAX SCREEN WIDTH (IN.)	TOTAL SCREEN WIDTH (IN.)
72	36.5	600	0.06625	46.25	92.63
		400		54.13	108.25
		800		58.06	116.18
		200		62.00	124.00

DIMENSIONS: INCHES
[MILLIMETERS]

DIMENSIONS (continued)

LWM2X1U

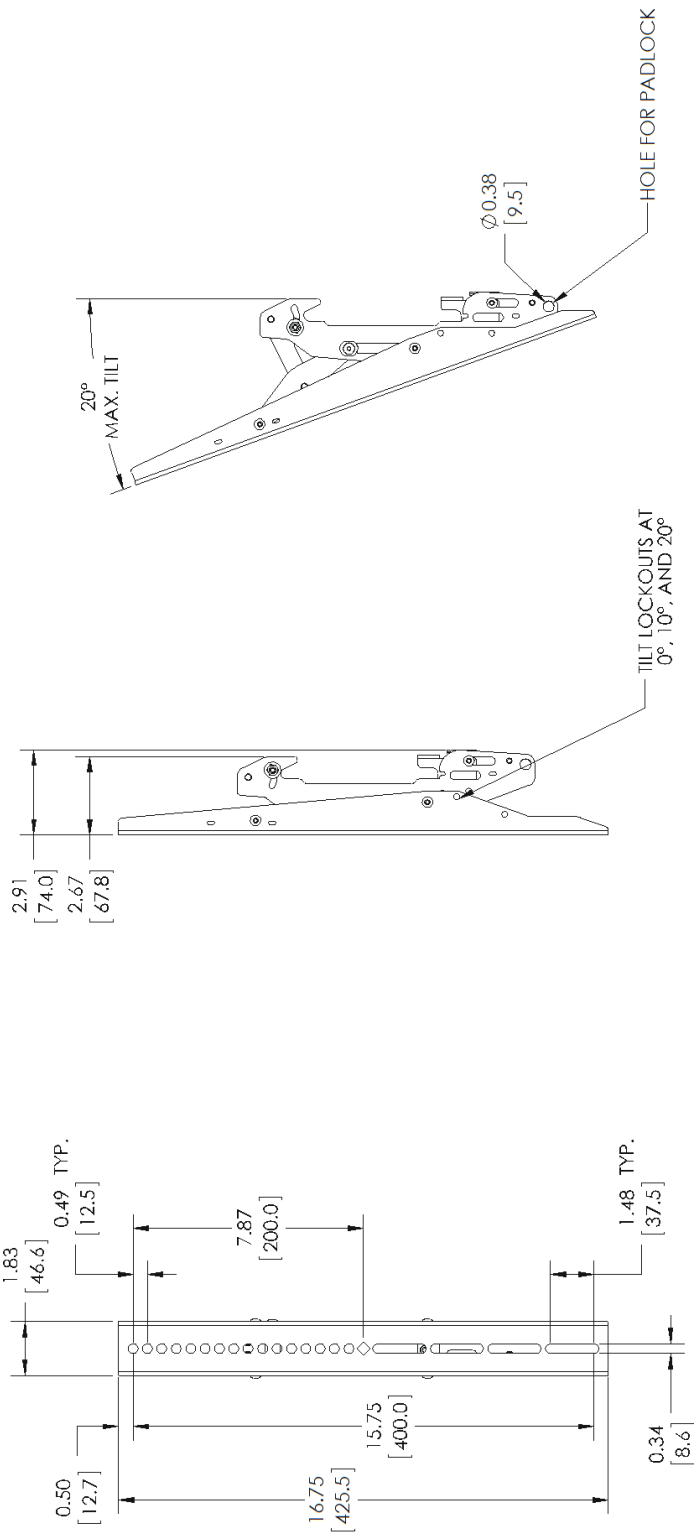

DIMENSIONS: INCHES
[MILLIMETERS]

DIMENSIONS (continued)

LWM3X1U

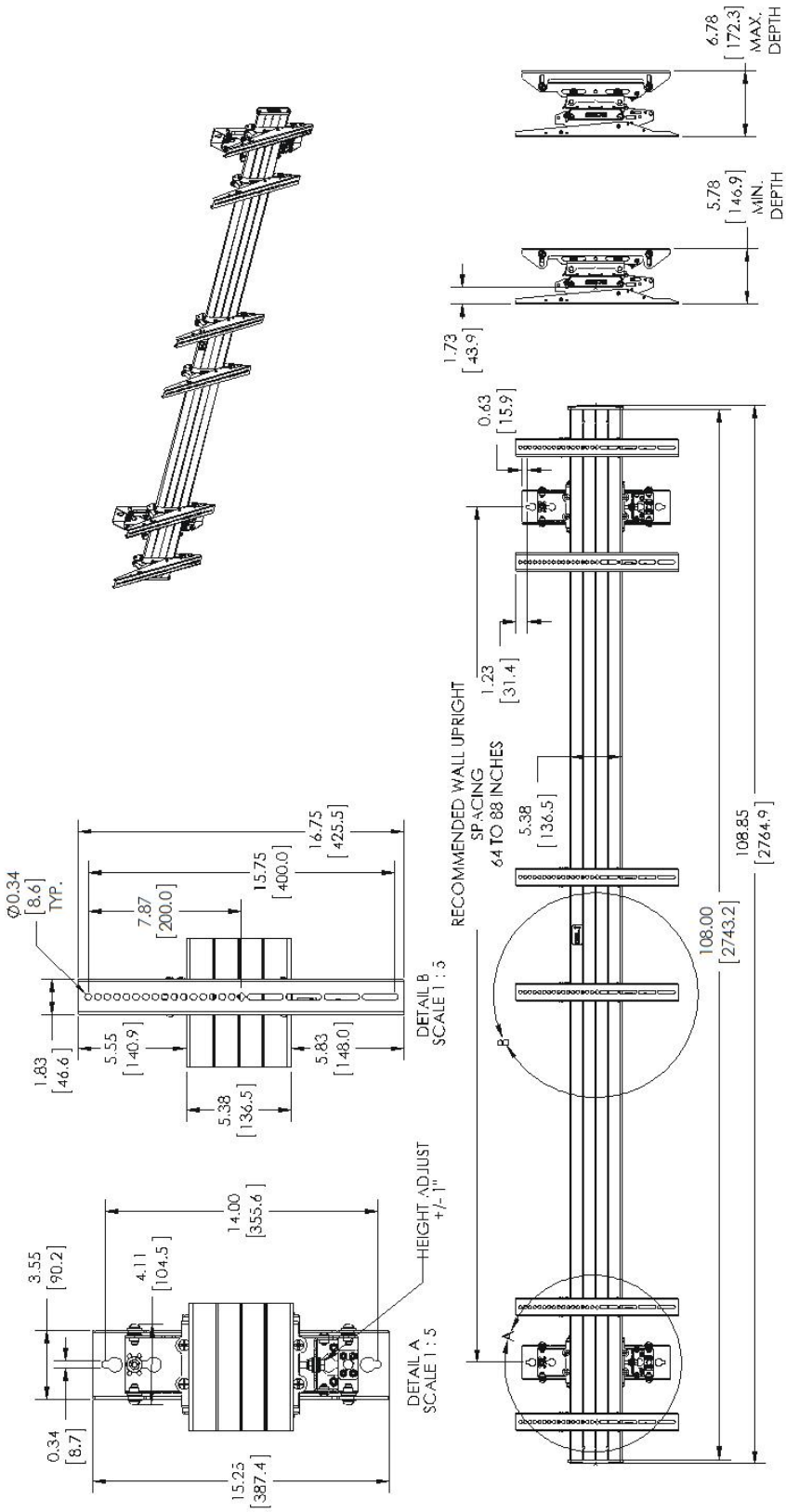

DIMENSIONS (continued)

LWM3X1U

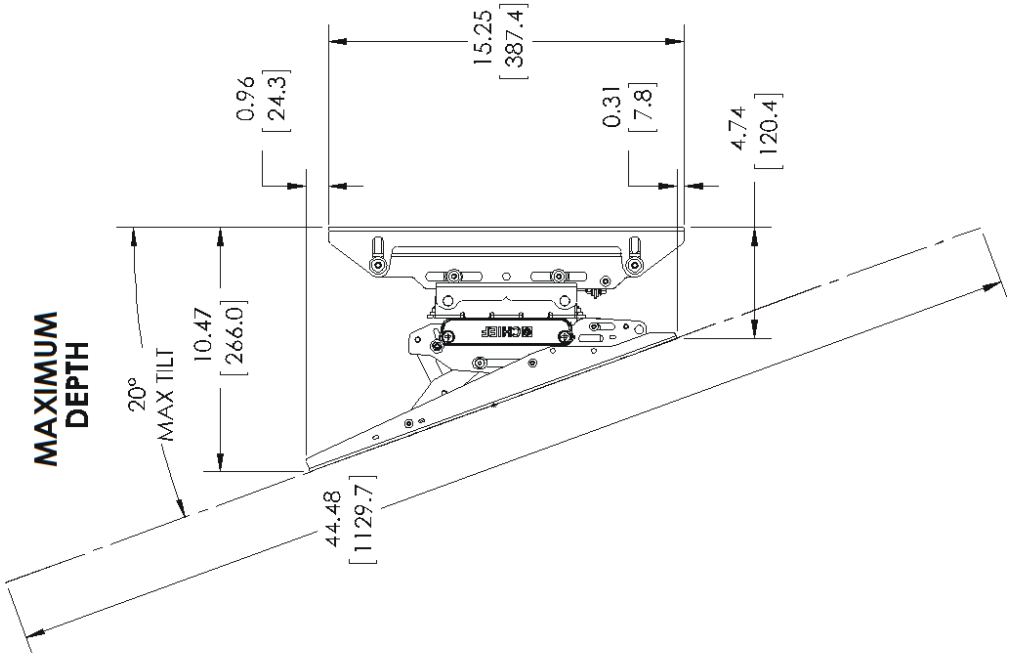

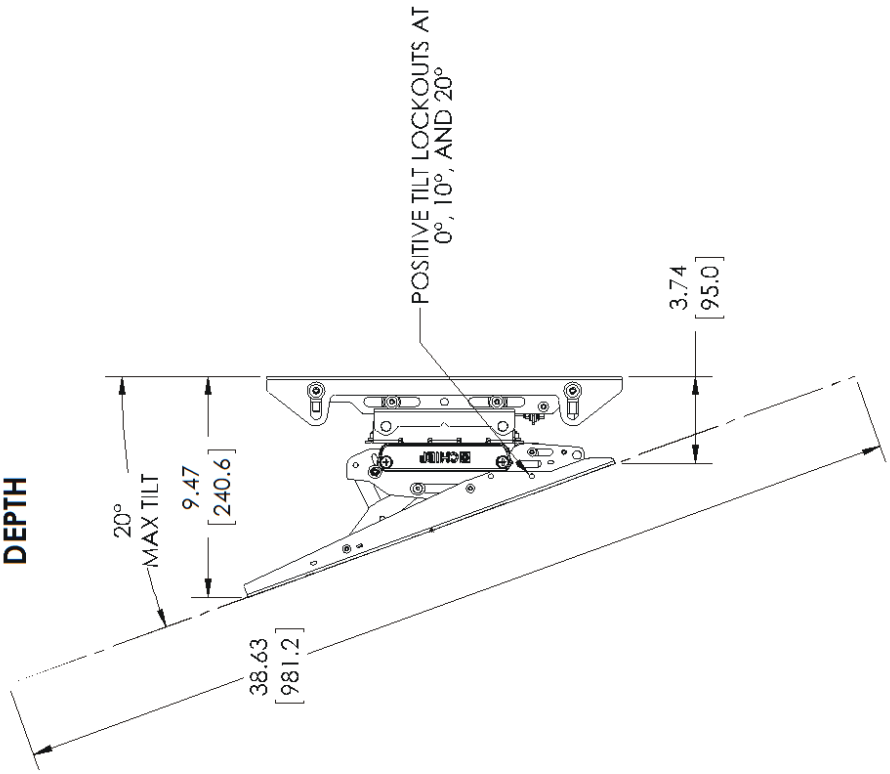

DIMENSIONS: INCHES [MILLIMETERS]

DIMENSIONS (continued)

LWM4X1U

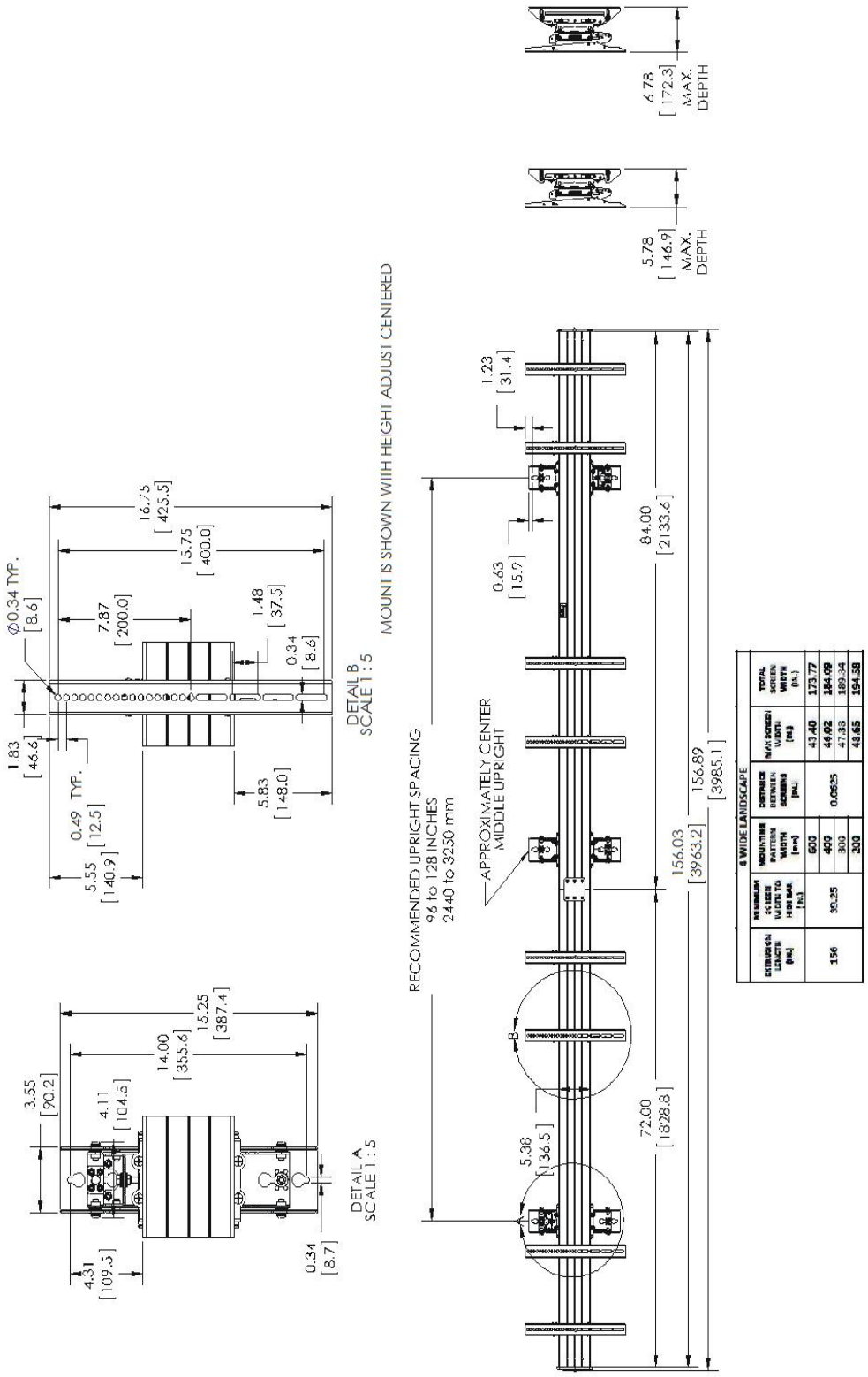

DIMENSIONS: INCHES
[MILLIMETERS]

DIMENSIONS (continued)

LWM4X1U

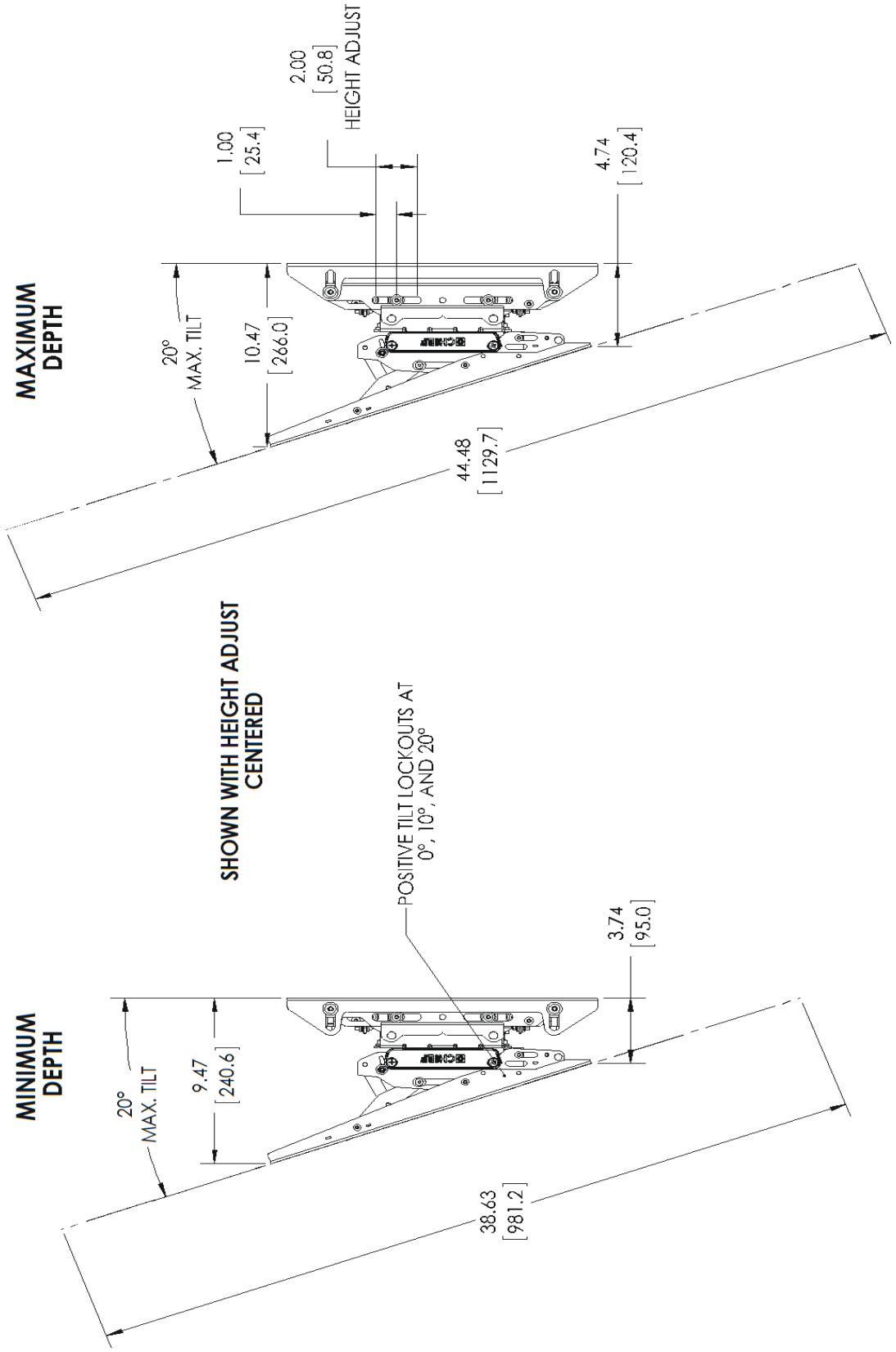

DIMENSIONS: INCHES [MILLIMETERS]

DIMENSIONS (continued)

LWM5X1U

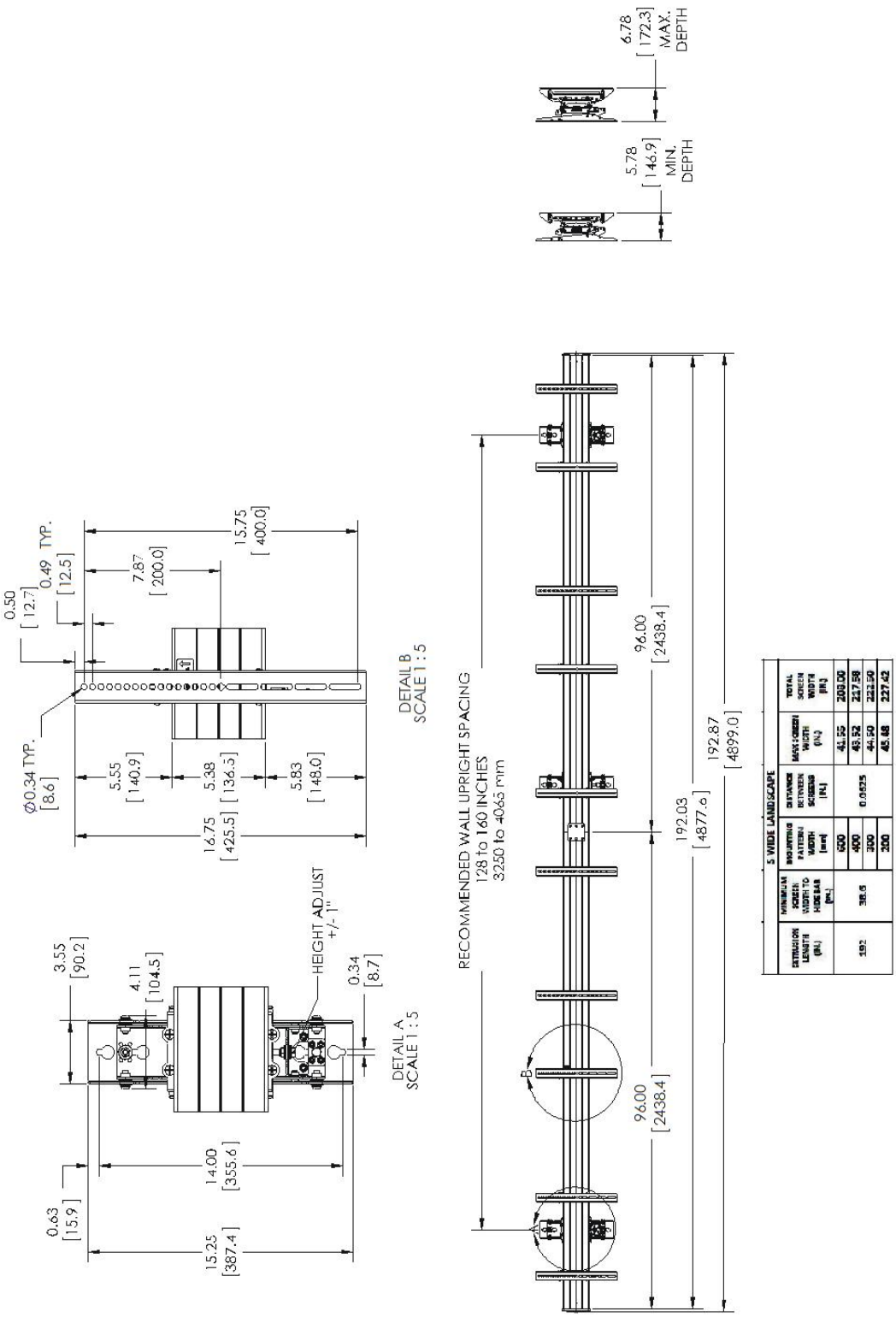

DIMENSIONS: INCHES
[MILLIMETERS]

DIMENSIONS (continued)

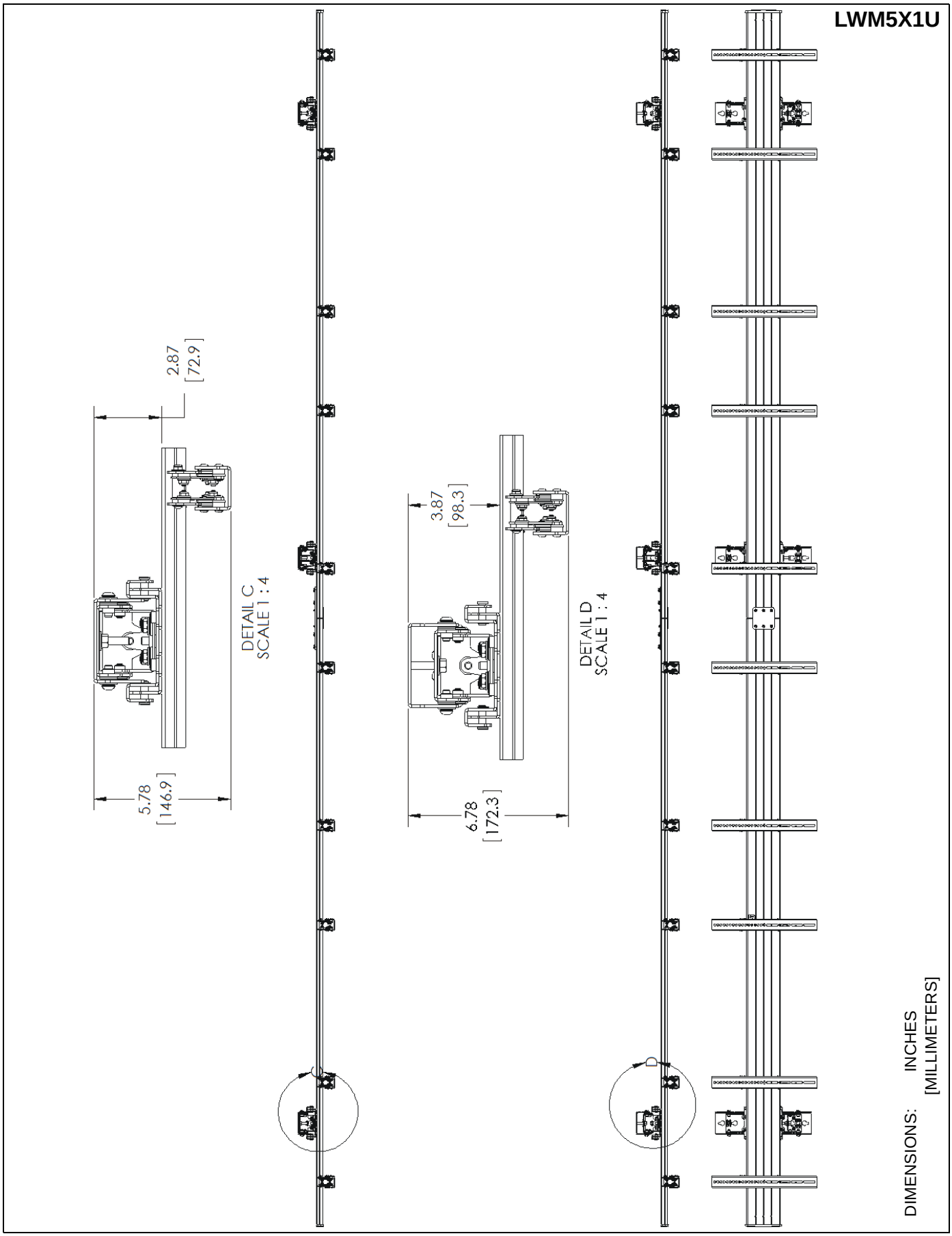

DIMENSIONS (continued)

LWM5X1U

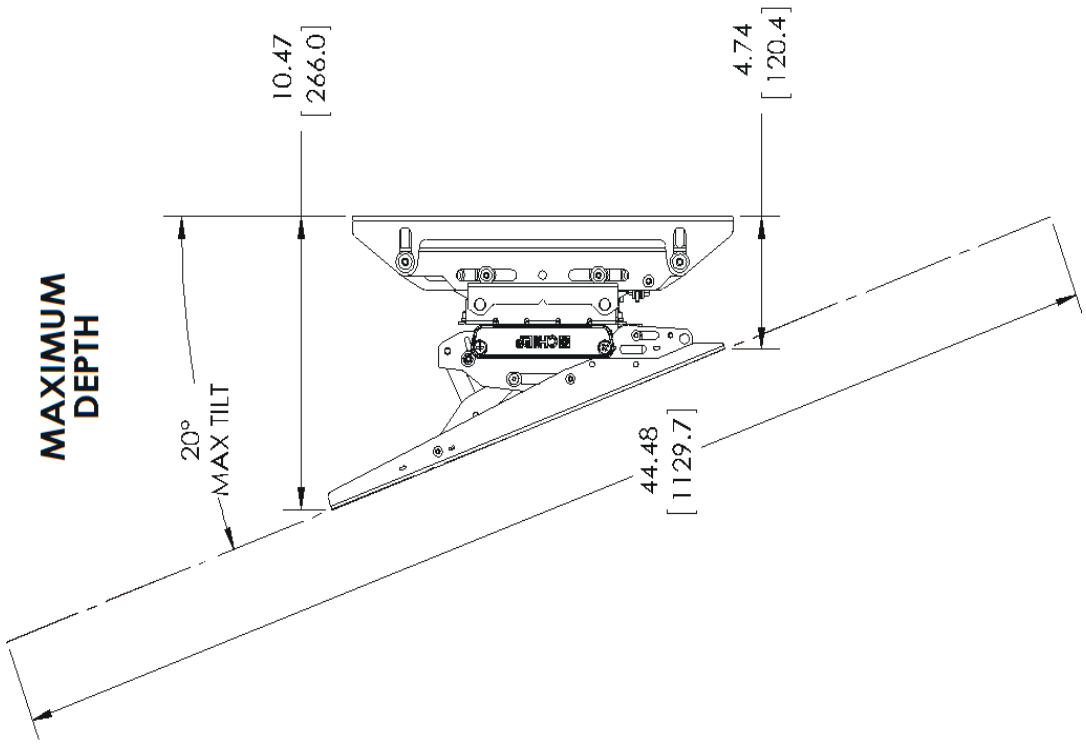

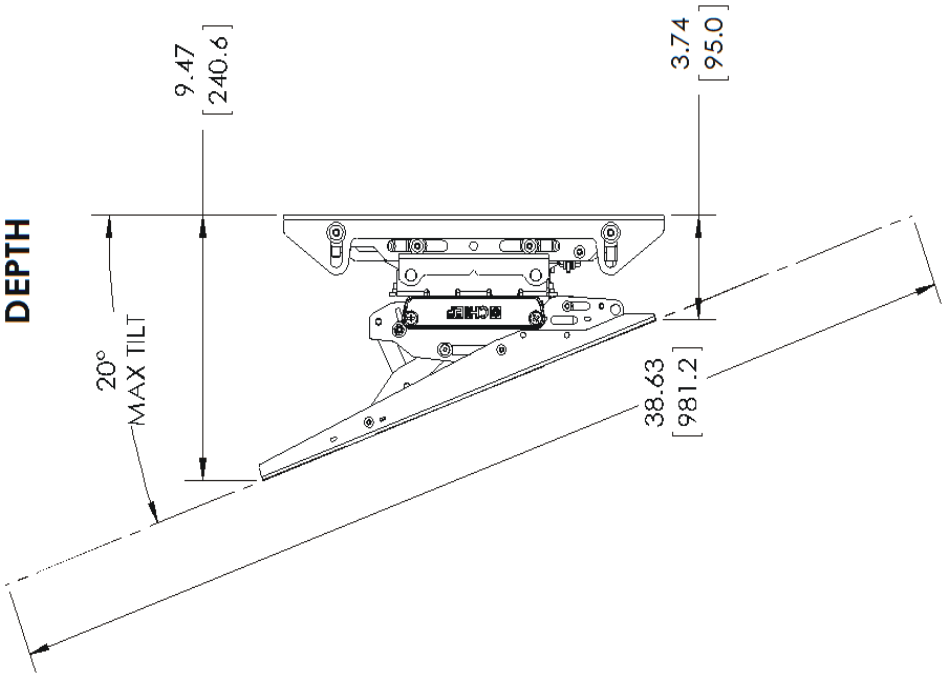

DIMENSIONS: INCHES [MILLIMETERS]

Our Mounts. **Your Vision.**

Chief, a products division of
Milestone AV Technologies

8800-003056 Rev00
©2018 Milestone AV Technologies
www.milestone.com
04/18

USA/International
A 6436 City West Parkway, Eden Prairie, MN 55344
P 800.582.6480 / 952.225.6000
F 877.894.6918 / 952.894.6918

Europe
A Franklinstraat 14, 6003 DK Weert, Netherlands
P +31 (0) 495 580 852
F +31 (0) 495 580 845

Asia Pacific
A Office No. 918 on 9/F, Shatin Galleria
18-24 Shan Mei Street
Fotan, Shatin, Hong Kong
P 852 2145 4099
F 852 2145 4477

30% POST-CONSUMER CONTENT