SONY

Headphone Amplifier

Operating Instructions GB

Manuel d’instructions FR

使用說明書 CT

TA-ZH1ES

About manuals supplied

The two following manuals are included.

Operating instructions (this manual)
Provides you with instructions on how to use.

Precautions/Specifications (separate manual)
Provides you with precautions and product specifications.

Supplied Accessories

❑ Headphone amplifier

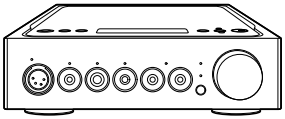

❑ AC power cord (mains lead)

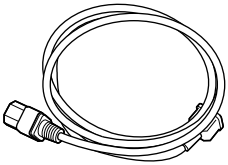

❑ USB cable (USB-A/USB-B)

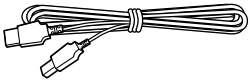

❑ Digital cable for WALKMAN®



❑ Remote control

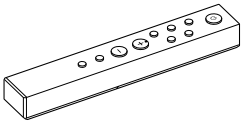

❑ R03 (size AAA) batteries



❑ Operating instructions (this manual)

❑ Precautions/Specifications

Table of Contents

Supplied Accessories 2

Guide to Parts and Controls 4

GB

Connection:

Connection 1: Connecting the Input Equipment 10

WALKMAN® 10

Smartphone 10

AV Equipment 11

Computer 13

Connection 2: Connecting the Headphones 14

Connecting with the Balanced Connection 14

Connecting with the Unbalanced Connection 16

Connecting the Audio Output Jacks (PRE OUT) without Using the Headphone Jack 17

Connection 3: Connecting the AC Power Cord (Mains Lead) 18

Listening to Music:

Listening to the Music Source of Your WALKMAN®, Smartphone, or AV Equipment 19

Listening to the Music Source of Your Computer 21

Preparing the Computer 21

Playing the Music Source of the Computer 24

Using the Various Functions:

Changing the Display Window.....26

Operating the Menu 27

Troubleshooting..... 30

Index 33

Guide to Parts and Controls

Front Panel

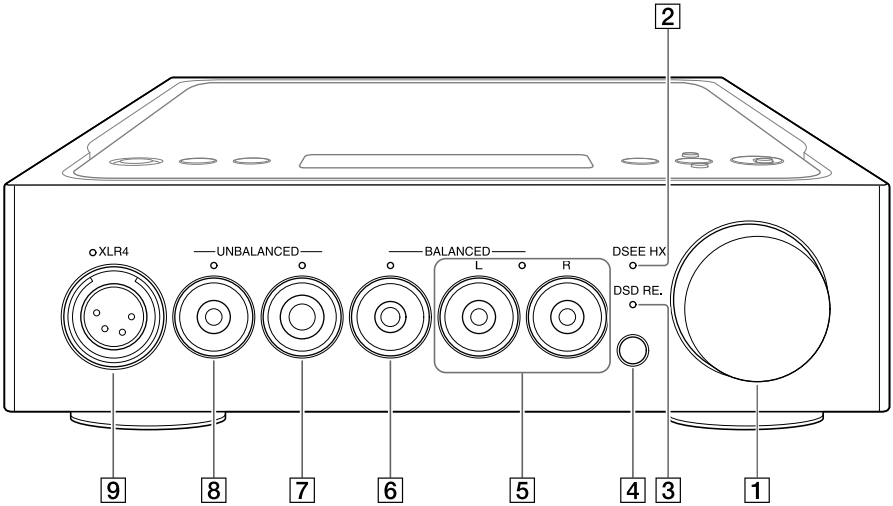

1 **Volume knob**
Adjusts the volume level.

2 **DSEE HX indicator**
Lights while the DSEE HX function works (page 28).

Tip
While an unsupported input signal is input, this indicator lights and turns off immediately when the DSEE HX function is turned on.

3 **DSD RE. indicator**
Lights while the DSD Remastering function works (page 28).

4 **Remote control sensor**

While selecting the headphone jack, the indicator on the selected headphone jack lights.

Headphone jack of the amplifier	Plug and shape of the headphones
5 3-pole mini headphone jack (balanced connection, 3.5 mm in diameter) × 2 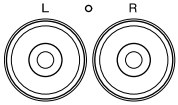	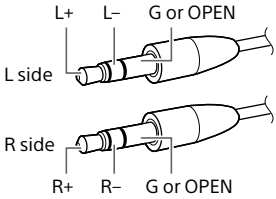
6 Balanced standard headphone jack (4.4 mm in diameter) 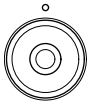	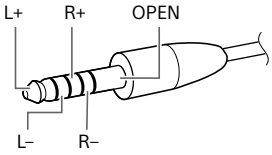
7 Standard headphone jack (6.3 mm in diameter) 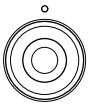	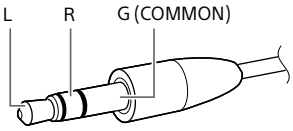
8 Stereo mini headphone jack (3.5 mm in diameter) 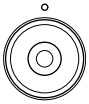	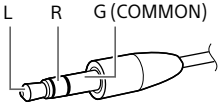
9 XLR4 headphone jack (balanced 4-pin) 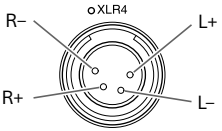	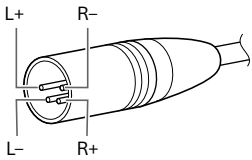

Note

If you trying to convert the balanced connection to the unbalanced connection, the amplifier may be damaged.

Right Side Panel

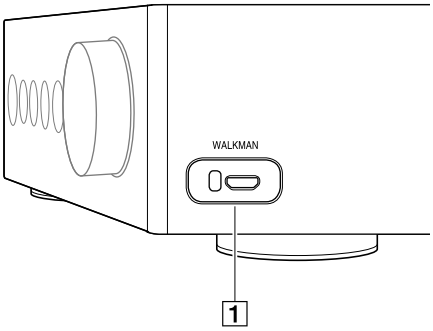

1 WALKMAN port (for WALKMAN®/ Xperia™ connection) (page 10)

Rear Panel

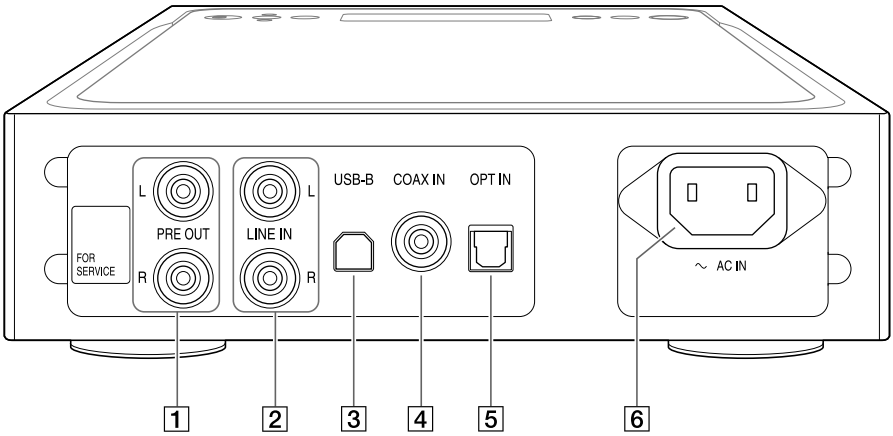

1 PRE OUT L/R jacks (page 17)

2 LINE IN L/R jacks (page 11)

3 USB-B port (page 13)

4 COAX (coaxial) IN jack (page 11)

5 OPT (optical) IN jack (page 12)

6 AC IN jack (page 18)

Tip

Do not peel off the sticker labeled "FOR SERVICE". It is for service personnel only.

Top Panel

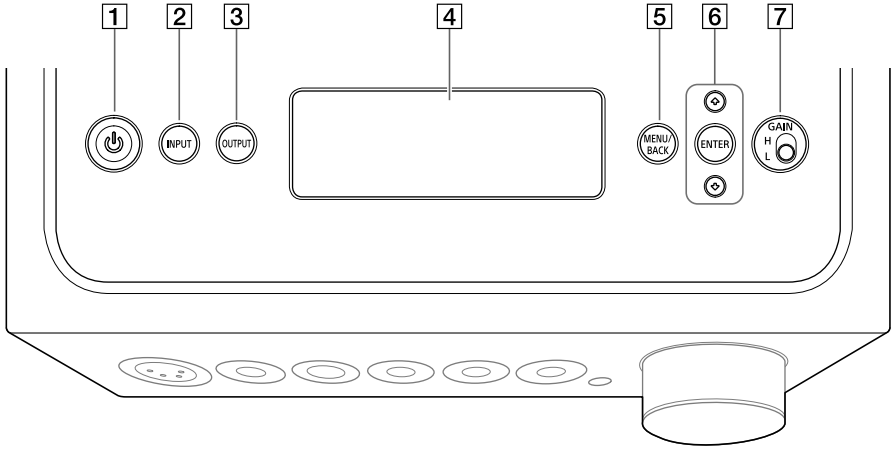

GB

1 ⏻ **(power) button**

Turns the amplifier on/off. The indicator lights when the amplifier turns on.

2 **INPUT button**

Select the equipment of the music source by pressing this button repeatedly. The selected input name appears in the display window (page 19).

3 **OUTPUT button**

Select the headphone jack or PRE OUT L/R jacks for output by pressing this button repeatedly. The selected output name appears in the display window (page 19).
When selecting the PRE OUT L/R jacks for output, see "Connecting the Audio Output Jacks (PRE OUT) without Using the Headphone Jack" (page 17).

4 **Display window**

Displays the input name, input signal format, menu items, etc. (page 26).

5 **MENU/BACK button**

Displays the menu in the display window. When pressing this button while the menu is displayed, the display returns to the playback display.

6 **↑/↓/ENTER button**

Select the menu item or setting value in the display window by pressing ↑/↓, and decide the selection by pressing ENTER.

7 **GAIN (H/L) select switch**

Adjusts the gain of the headphone jack. If the volume of the headphones is small, set to "H" after turning the volume down. In normal use, set to "L" (pages 19, 24).

Remote Control

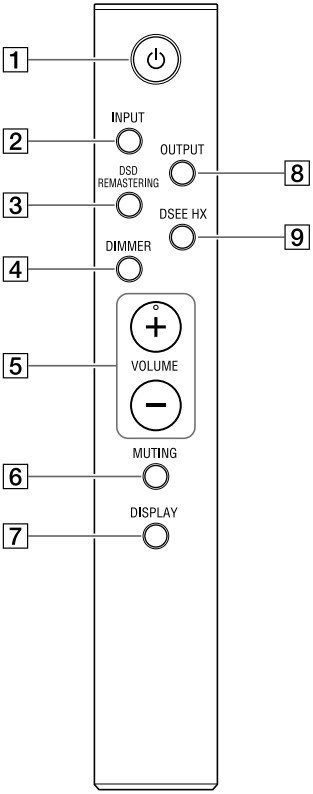

1 ⏻ **(power) button**
Turns the amplifier on/off.

2 **INPUT button**
Select the equipment of the music source by pressing this button repeatedly. The selected input name appears in the display window (page 19).

3 **DSD REMASTERING button**
Turns the DSD Remastering function on/off. The DSD RE. indicator lights while the DSD Remastering function works. For details about the DSD Remastering function, see "Menu Item List" (page 28).

4 **DIMMER button**
Adjusts the brightness of the display window.
Each time you press the button, the brightness of the display window changes as follows:
Bright → Dark → Off → Bright ...

When the display window is turned off, the indicators on the front panel of the amplifier are turned off.

5 **VOLUME +/– buttons**
Adjusts the volume level.

6 **MUTING button**
Turns off the sound temporarily. While muting is on, [MUTING] appears in the display window.
Muting is canceled by pressing this button again or increasing the volume level with VOLUME + on the remote control.

7 **DISPLAY button**
Changes the display in the display window while playing. You can select the normal playback display [NORMAL] or input/output signal display [FORMAT]. For details about the display while playing, see "Changing the Display Window" (page 26).

8 **OUTPUT button**
Select the headphone jack or PRE OUT L/R jacks for output by pressing this button repeatedly. The selected output name appears in the display window (page 19).
When selecting the PRE OUT L/R jacks for output, see "Connecting the Audio Output Jacks (PRE OUT) without Using the Headphone Jack" (page 17).

9 **DSEE HX button**
Turns the DSEE HX function on/off. When you turn the DSEE HX on by pressing the button, the [DSEE HX] setting that is set in the menu is recalled. The DSEE HX indicator lights while the

DSEE HX function works. For details about the DSEE HX function, see “Menu Item List” (page 28).

To insert batteries

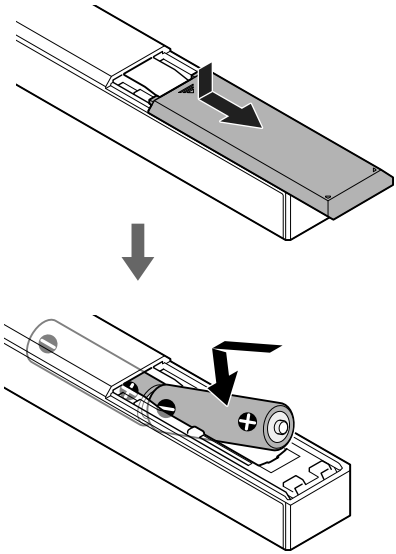

Notes

- Do not leave the remote control in an extremely hot or humid place.
- Do not use a new battery and an old one together.
- Do not mix different kinds of batteries.
- If you do not intend to use the remote control for an extended period of time, remove the batteries to avoid possible damage from battery leakage and corrosion.

Connection 1: Connecting the Input Equipment

WALKMAN®

Connect the digital output supported WALKMAN® to the WALKMAN port (for WALKMAN®/ Xperia connection) of the amplifier.

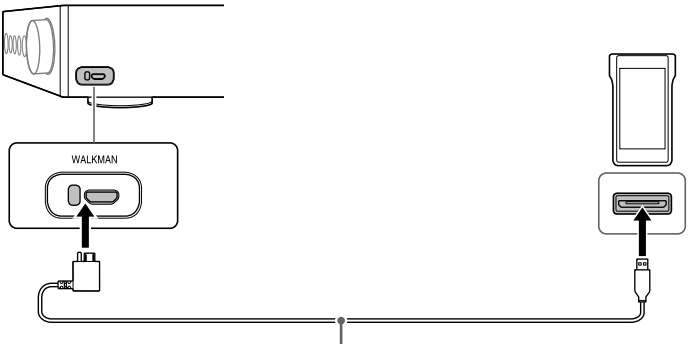

Tip

You can charge the WALKMAN® while playing if it supports the digital cable for WALKMAN® (supplied).

Smartphone

Connect the smartphone (Xperia) to the WALKMAN port (for WALKMAN®/Xperia connection) of the amplifier.

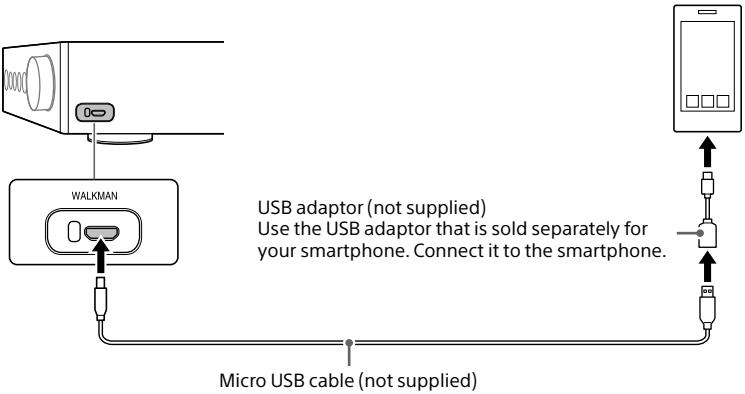

AV Equipment

Select the connecting method for the output jack of your equipment.

❑ Equipment with analog audio (LINE) output jacks

Connect equipment with analog audio (LINE) output jacks such as a record player (PS-HX500) to the LINE IN L/R jacks of the amplifier.

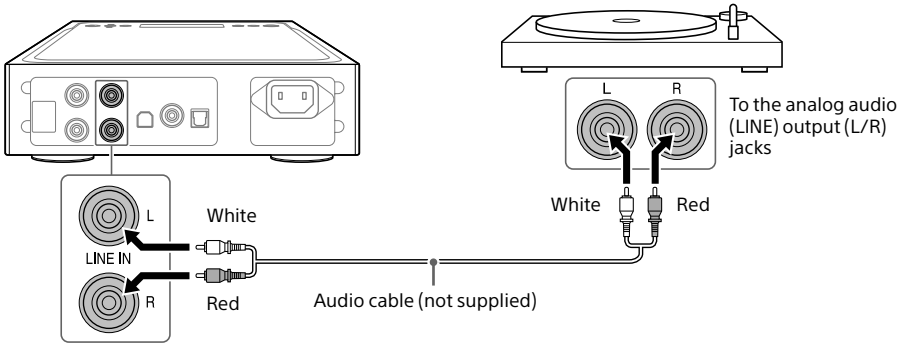

❑ Equipment with a digital coaxial output jack

Connect equipment with a digital coaxial output jack such as a CD player to the COAX IN jack of the amplifier.

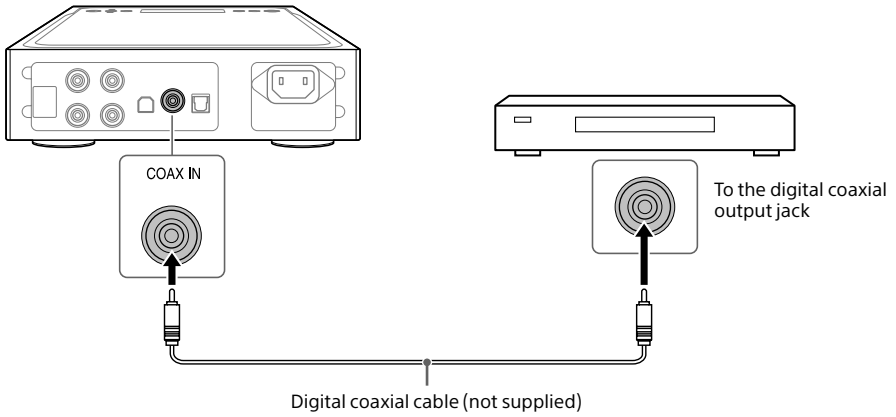

❑ Equipment with a digital optical output jack

Connect equipment with a digital optical output jack such as a CD player to the OPT IN jack of the amplifier.

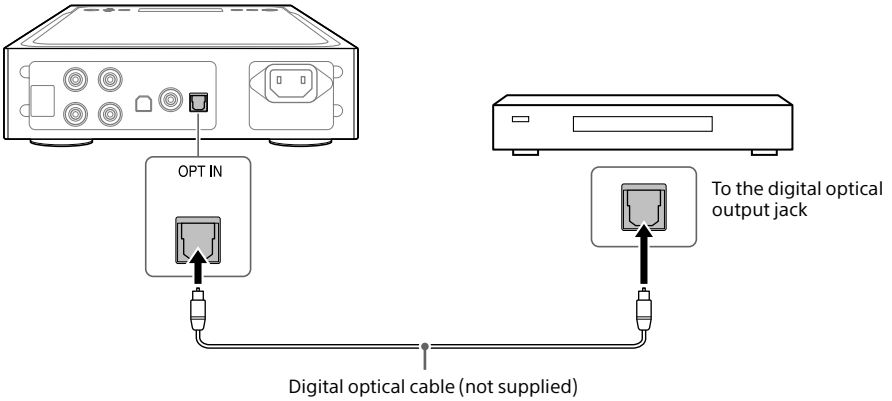

Computer

Connect the USB-B port of the amplifier to your computer.

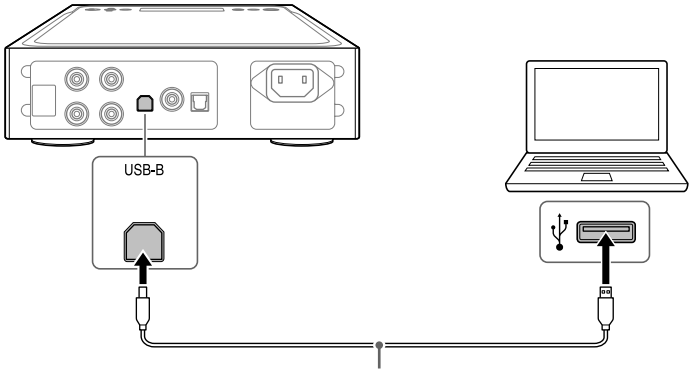

Tip

To listen to the music of your computer, you need to install the driver for the USB port and "Hi-Res Audio Player" to the computer. For details, see "To install the driver for the USB port" (page 21) and "To install the "Hi-Res Audio Player" software" (page 22).

Connection 2: Connecting the Headphones

Connecting with the Balanced Connection

Select the headphone jack for your headphones.

❑ **Headphones with balanced standard plug (4.4 mm in diameter)**

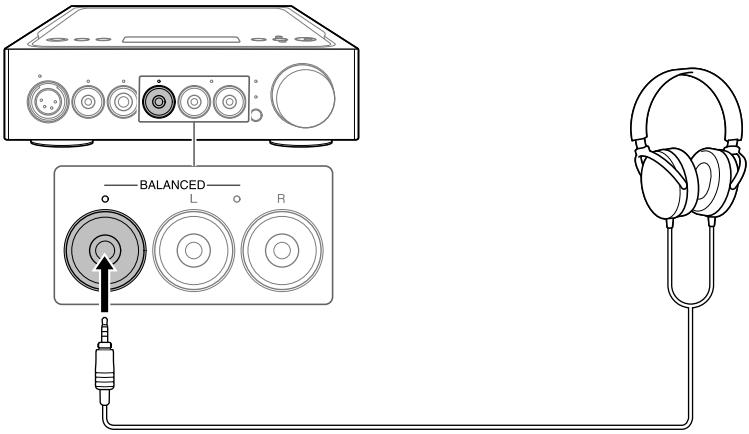

❑ **Headphones with 3-pole mini plug (3.5 mm in diameter) (x 2)**

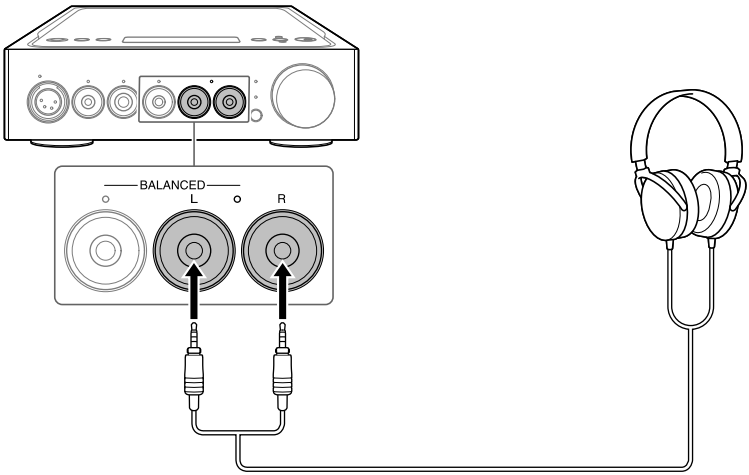

❑ Headphones with XLR4 plug (balanced 4-pin)

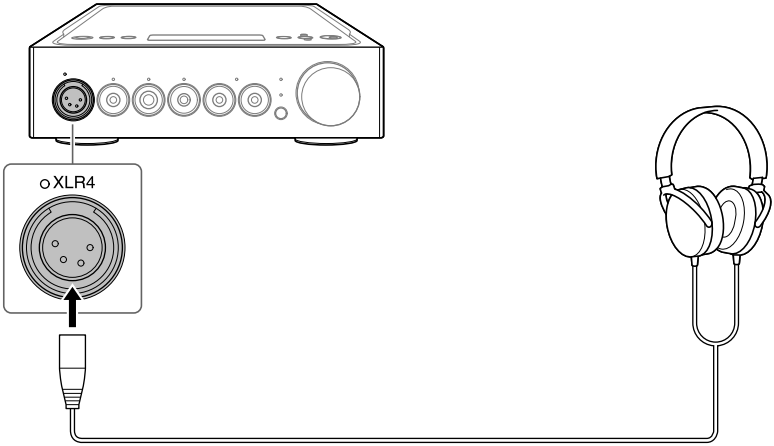

Connecting with the Unbalanced Connection

Select the headphone jack for your headphones.

❑ Headphones with standard plug (6.3 mm in diameter)

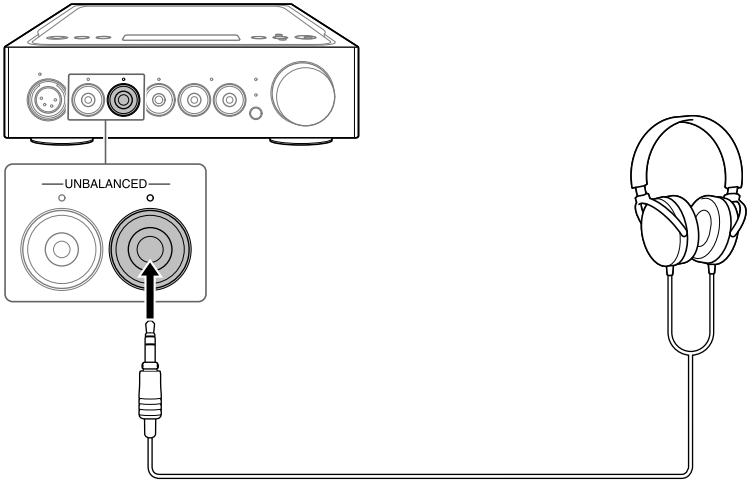

❑ Headphones with stereo mini plug (3.5 mm in diameter)

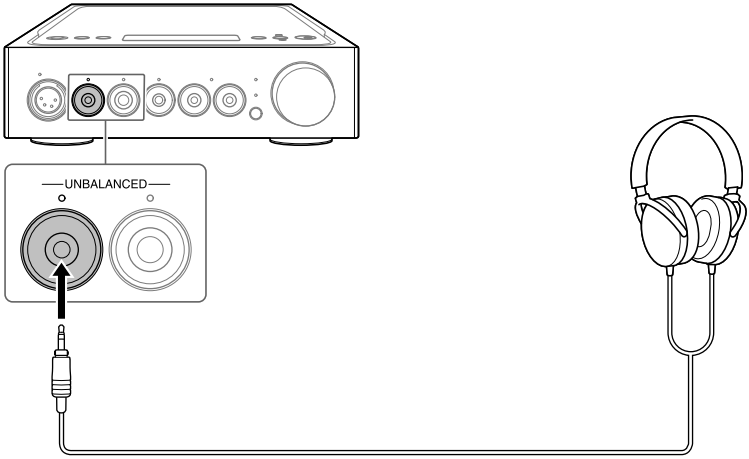

Connecting the Audio Output Jacks (PRE OUT) without Using the Headphone Jack

When connecting equipment such as an integrated amplifier, active speaker, etc. to the PRE OUT L/R jacks of the amplifier, you can enjoy the sound by outputting sound from the speakers.

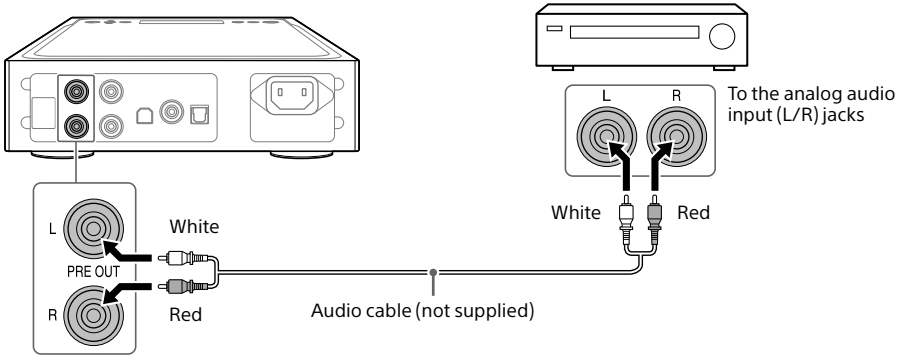

Tip

You can change the [PRE OUT] setting by operating the menu. For details, see page 29.

Connection 3: Connecting the AC Power Cord (Mains Lead)

1 Connect the AC IN jack of the amplifier to a wall outlet (wall socket) with the AC power cord (mains lead) (supplied).

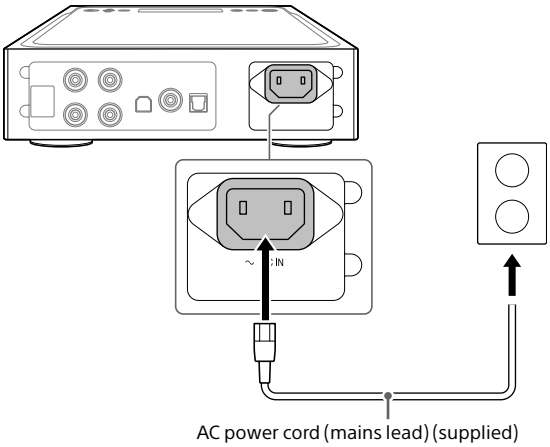

2 Press ⏻ (power) to turn the amplifier on.

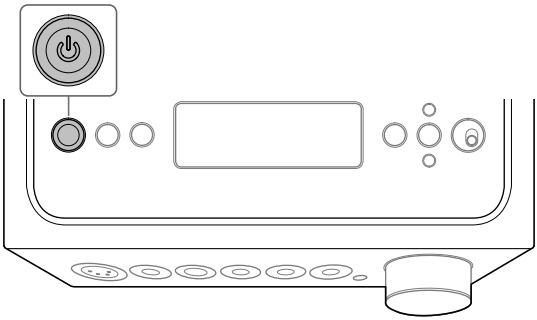

Listening to the Music Source of Your WALKMAN®, Smartphone, or AV Equipment

For details about the supported format, see “Specifications” of “Precautions/Specifications” (separate manual).

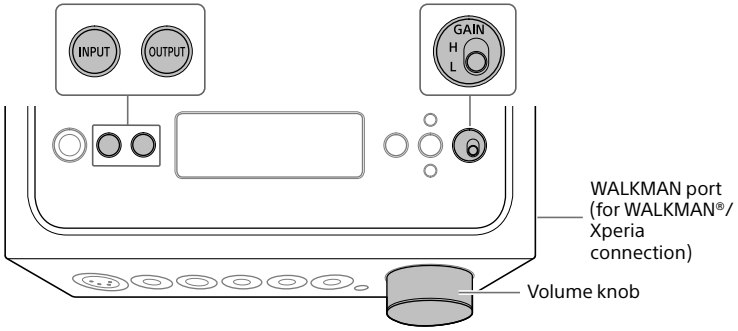

1 Make the connection for playback (pages 10 to 18).

2 Press OUTPUT repeatedly to select the headphone jack for output.

The selected output name appears in the display window.

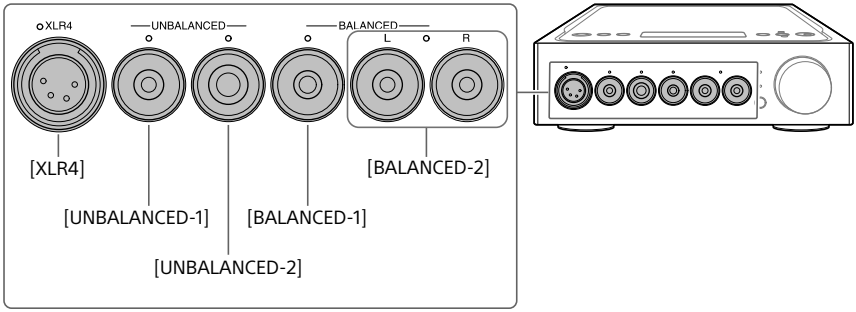

Tip

When selecting the PRE OUT L/R jacks, [PRE OUT] appears in the display window.

3 Check that the indicator on the selected headphone jack lights up.

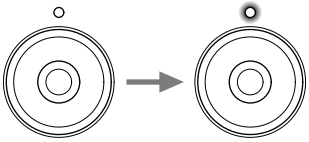

Tip

When selecting the PRE OUT L/R jacks, all the indicators on the headphone jacks turn off.

4 Press INPUT repeatedly to display the input name of the equipment of the music source in the display window.

Equipment and input name

WALKMAN®/Smartphone: [WALKMAN]

Equipment with analog audio (LINE) output jacks: [ANALOG (LINE)]

Equipment with a digital coaxial output jack: [DIGITAL (COAX)]

Equipment with a digital optical output jack: [DIGITAL (OPT)]

5 Play the equipment of the music source.

6 Turn the volume knob to adjust the volume level.

Depending on the headphones, the volume may remain low. In this case, set GAIN to “H” after tuning the volume down. In normal use, GAIN should be set at “L.”

Listening to the Music Source of Your Computer

Preparing the Computer

To install the driver for the USB port

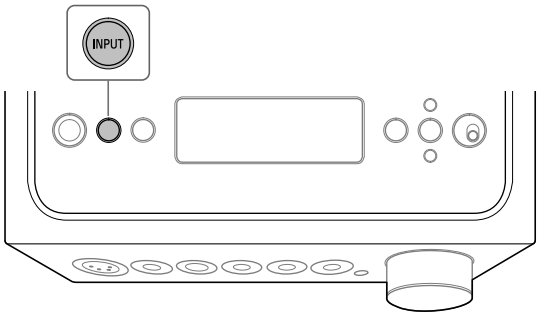

1 Press INPUT repeatedly to select [PC (USB-B)].

[PC (USB-B)] appears in the display window.

2 Turn the computer on and install the driver for the USB port of the amplifier.

The installation method of the driver differs depending on the OS of the connected computer.

❑ **Windows 7/Windows 8/Windows 8.1/Windows 10**

The driver for the USB port is installed automatically when the amplifier is detected by the computer.

❑ **Windows Vista**

Visit the website from the URL below. In the website, input "TA-ZH1ES" in the search window, download drivers for the USB port, then install it.

For customers in Europe: http://support.sony-europe.com/

For customers in the U.S.A. and Canada: http://esupport.sony.com/

For customers in other regions: http://www.sony-asia.com/support

❑ **Mac**

Driver installation is not required.

Tip

If the driver is not installed for Windows 7/Windows 8/Windows 8.1/Windows 10, visit the website from the URL below. In the website, input "TA-ZH1ES" in the search window, download drivers for the USB port, then install it.
For customers in Europe: http://support.sony-europe.com/
For customers in the U.S.A. and Canada: http://esupport.sony.com/
For customers in other regions: http://www.sony-asia.com/support

To install the "Hi-Res Audio Player" software

1 Install "Hi-Res Audio Player" to the computer which the driver for the USB port is installed.

Visit the website from the URL below. In the website, input "TA-ZH1ES" in the search window, download "Hi-Res Audio Player," then install it. For procedures of installation and operation, refer to the same URL.

For customers in Europe: http://support.sony-europe.com/

For customers in the U.S.A. and Canada: http://esupport.sony.com/

For customers in other regions: http://www.sony-asia.com/support

2 Start "Hi-Res Audio Player" that is installed on the computer.

3 Select [Configure] - [Device] from the tool bar of "Hi-Res Audio Player," then select [Sony Headphone Amplifier Driver] for [Device].

The preparation of the computer is finished.

Features of Hi-Res Audio Player

"Hi-Res Audio Player" is player software that allows you to play back high-quality audio files with simple operation.

- Easy playback of high-resolution audio files
  You can play back high-resolution audio files, such as DSD files, purchased in music distribution sites, etc., by connecting the device to your computer, and making simple software settings.
- Playlist function
  You can create playlists to listen to tracks you like in the order you want by dragging and dropping music files to "Hi-Res Audio Player." The playlists created can be saved and edited.
- Playing music with higher audio quality
  By storing audio data in the active memory of your computer before playback, the CPU load can be reduced, and you can play back music files with more stable audio quality.

Supported format

Hi-Res Audio Player supports the following audio file formats.

- DSF (.dsf): 2.8 MHz/5.6 MHz/11.2 MHz/22.4 MHz
- DSDIFF (.dff): 2.8 MHz/5.6 MHz/11.2 MHz/22.4 MHz
- PCM (.wav/.aiff/.aif): 44.1 kHz - 768 kHz, 16 bit - 32 bit
- FLAC (.flac): 44.1 kHz - 384 kHz, 16 bit - 32 bit
- ALAC (.m4a): 44.1 kHz - 384 kHz, 16 bit - 32 bit
- MP3 (.mp3): 32 kbps - 320 kbps

Playing the Music Source of the Computer

Play the music source with the “Hi-Res Audio Player” software that is installed on the computer.

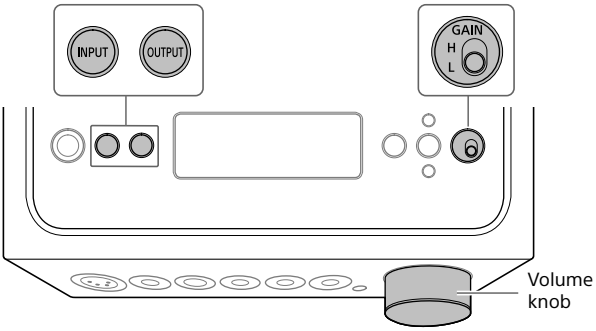

1 Press OUTPUT repeatedly to select the headphone jack for output.

The selected output name appears in the display window.

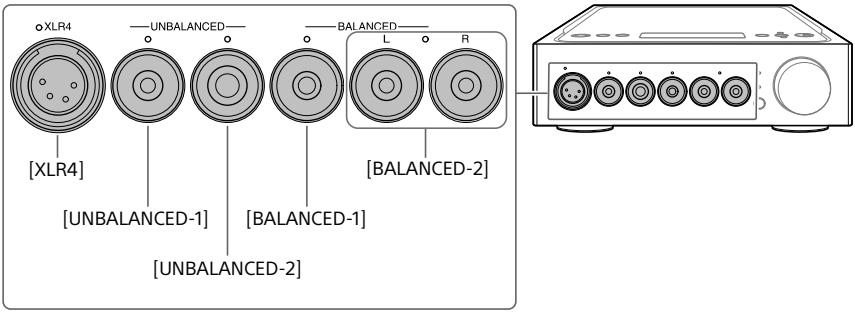

Tip

When selecting the PRE OUT L/R jacks, [PRE OUT] appears in the display window.

2 Check that the indicator on the selected headphone jack lights up.

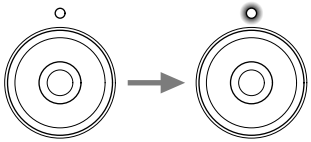

Tip

When selecting the PRE OUT L/R jacks, all the indicators on the headphone jacks turn off.

3 Press INPUT repeatedly to select [PC (USB-B)].

[PC (USB-B)] appears in the display window.

4 Start "Hi-Res Audio Player" and play the music source.

For details about "Hi-Res Audio Player," see page 23.

5 Turn the volume knob to adjust the volume level.

Depending on the headphones, the volume may remain low. In this case, set GAIN to "H" after tuning the volume down. In normal use, GAIN should be set at "L."

Changing the Display Window

You can change the displayed items in the display window by pressing DISPLAY on the remote control or operating the menu.

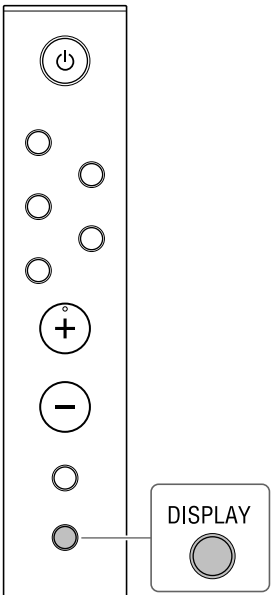

1 Press DISPLAY on the remote control.

The display window changes as follows.

Normal playback display [NORMAL]

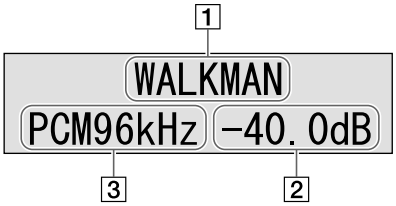

1 Input name

2 Volume level

3 Format of the input signal

Input/output signal display [FORMAT]

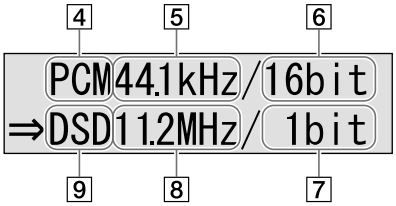

4 Format of the input signal

5 Sampling frequency of the input signal

6 Bit depth of the input signal
This may not be displayed correctly depending on the input signal.

7 Bit depth of the output signal

8 Sampling frequency of the output signal

9 Format of the output signal

Operating the Menu

You can make various settings on the menu that is displayed in the display window.

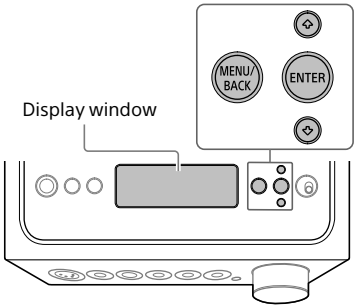

1 Press MENU/BACK.

The menu appears in the display window.



2 Press ↑/↓ to select the menu item, then press ENTER.

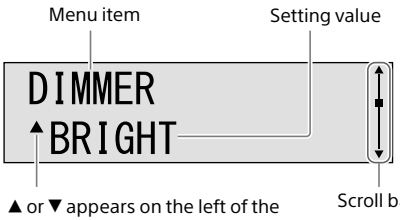

For details about the setting item, see "Menu Item List" (page 28).

3 Press ↑/↓ to select the setting value, then press ENTER.

The selected value is reflected and the display returns to the playback display (page 26).

Tip

When you press MENU/BACK while operating the menu, the menu operation is canceled and display returns to the playback display.

To reset the settings to the factory default

You can reset the input, volume, and menu settings to the factory default.

1 Press ⏻ (power) to turn the amplifier off.

2 Press ⏻ (power) for more than 7 seconds.

[MEMORY CLEARED!] appears in the display window, then the settings are reset to the factory default.

GB

Menu Item List

You can set the following items on the menu.
The default settings are underlined.

Setting items	Setting value
[DSEE HX] Upscales compressed or CD quality sound source to near hi-resolution sound quality. You can also turn the DSEE HX function on/off by pressing DSEE HX on the remote control. When you set to on, the setting that is selected on this menu is recalled. The DSEE HX function works with the following PCM signals. **Sampling frequency** / **Bit depth** 32 kHz, 44.1 kHz, 48 kHz / 16 bit, 24 bit, 32 bit 88.2 kHz, 96 kHz, 176.4 kHz, 192 kHz, 352.8 kHz, 384 kHz / 16 bit, 24 bit	• [OFF]: Off • [STANDARD]: Standard mode • [FEMALE VOCAL]: Suitable mode for female vocal • [MALE VOCAL]: Suitable mode for male vocal • [PERCUSSION]: Suitable mode for the percussive source • [STRINGS]: Suitable mode for the strings source
[DSD REMASTERING] Converts all PCM signals to DSD signals of 11.2 MHz or 12.2 MHz. This setting works in the same way as pressing DSD REMASTERING on the remote control.	• [OFF]: Off • [ON]: On
[D.C.PHASE LINEARIZER] Lets you approximate the low frequency phase characteristics to a traditional analog amplifier.	• [OFF]: Off • [ON]: On
[DIMMER] Changes the brightness of the display window and turns the indicators on/off .	• [BRIGHT]: The display window and indicators are bright. • [DARK]: The display window is dim. • [DISPLAY OFF]: The display window and indicators are turned off. **Notes** • The ⏻ (power) indicator does not turn off regardless of this setting. • The display window lights brightly while operating the amplifier or remote control regardless of this setting.
[DISPLAY] Changes the display in the display window while playing. This setting works in the same way as pressing DISPLAY on the remote control.	• [NORMAL]: Normal playback display (input name, input signal, volume level) • [FORMAT]: Input/output signal display (format, sampling frequency, and bit depth of the input/output signal)

Setting items	Setting value
[AUTO VOLUME DOWN] Turns down the volume level of the amplifier automatically when changing the output, inserting/removing the headphone plug, changing the GAIN select switch setting, or turning the amplifier on while the volume level is set to loud.	• [OFF]: Off • [ON]: On **Note** This function is available for the headphones level only. The volume level for PRE OUT is not changed.
[ANALOG IN FORMAT] Selects the playing format of the audio signal that is input from the LINE IN L/R jacks.	Select from the following formats. [PCM48kHz]/[PCM96kHz]/[PCM192kHz]/[DSD2.8MHz]/[DSD5.6MHz]/[DSD11.2MHz] **Note** The DSEE HX function works only when [PCM48kHz] is selected.
[PRE OUT] Outputs the sound from the PRE OUT L/R jacks.	• [OFF]: Off • [VARIABLE]: Select this when adjusting the volume level on the amplifier. • [FIXED]: Select this when adjusting the volume level on the connected equipment. The sound is output with the volume level fixed. **Note** When you set to [OFF], [PRE OUT] is not displayed as the output target that is selected by OUTPUT.
[AUTO STANDBY] Turns the amplifier off automatically when you do not operate the amplifier in the silent state for about 20 minutes.	• [OFF]: Off • [ON]: On **Note** The default setting differs depending on the area.
[LR BALANCE] Adjusts the right and left balance of the output signal that is output from the headphone jack or PRE OUT L/R jacks.	Adjust from the following range. [L+6.00dB] - [CENTER] - [R+6.00dB] (0.25 dB increments) **Tip** You can set [LR BALANCE] of the headphone jacks and PRE OUT L/R jacks independently.

GB

Troubleshooting

General

The power does not turn on.

- Check that the AC power cord (mains lead) is connected securely.

The remote control does not function.

- Point the remote control at the remote control sensor on the amplifier (page 4).
- Remove any obstacles in the path between the remote control and the amplifier.
- Replace both batteries in the remote control with new ones (page 9).

The DSEE HX indicator does not light even though the DSEE HX function is turned on.

- The DSEE HX function does not work depending on the input signal. While an unsupported input signal is input, the DSEE HX indicator lights and turns off immediately when the DSEE HX function is turned on. For details about the supported input signal, see page 28.

The amplifier turns off automatically.

- If the menu setting item [AUTO STANDBY] is set to [ON], the amplifier turns off automatically when you do not operate the amplifier in the silent state for about 20 minutes. The time until the amplifier is turned off appears in the display window 1 minute before the amplifier is turned off.
- Remove the AC power cord (mains lead) from the amplifier, then turn the amplifier on again. Should any problem persist, consult your nearest Sony dealer.

AUTO STANDBY function does not work.

- When connecting the digital cable for WALKMAN® (supplied), the AUTO STANDBY function does not work.
- Since the operation sound is played back depending on the computer settings, the AUTO STANDBY function may not work.

[PROTECTOR] appears in the display window.

- [PROTECTOR] appears if an abnormal current is carried on the headphone jack, or the temperature in the amplifier rises abnormally. In this case, remove the headphone plug from the amplifier, then press ⏻ (power).

[OVER CURRENT] appears in the display window.

- [OVER CURRENT] appears if an abnormal current is carried on the USB cable of the WALKMAN port (for WALKMAN®/Xperia connection). In this case, remove the USB cable from the amplifier, then press ⏻ (power).

No item appears in the display window.

- Check if the menu setting item [DIMMER] is set to [DISPLAY OFF] (page 28).
- Adjust the brightness of the display window by pressing DIMMER on the remote control.

Sound

No sound is output from the amplifier.

Check the following descriptions for causes on the amplifier.

- Check the volume level, or cancel muting (page 8).
- Check that the indicator on the headphone jack lights up. If it turns off, press OUTPUT repeatedly to select the headphone jack (pages 4, 19, 24).
- Check that the headphone plug is inserted into the headphone jack firmly.
- Check that the proper input jack is selected.
- Check that the amplifier and connected equipment are turned on.
- Check if the input audio format is compatible with the amplifier. For details about the supported format, see “Specifications” of “Precautions/Specifications” (separate manual).

Check the following descriptions for causes on your computer.

- When connecting the computer (Windows) to the USB-B port of the amplifier, check that the dedicated driver is installed on the computer (page 21).
- Check that the volume level of the OS or playback software is set properly, or it is set to the muting status.
- If multiple playback software are started, the sound may not be output. In this case, start only the playback software that you want to play.
- Check that the playback device on your computer is set to “Sony Headphone Amplifier Driver.” If it is not, change the OS setting of the computer.

Multi channel source cannot be played.

- The amplifier supports only the 2 channel music source.

No sound is output from the PRE OUT L/R jacks.

- Check if the menu setting item [PRE OUT] is set to [OFF] (page 29).

The volume level is changed automatically.

- The volume level of the amplifier is turned down automatically when changing the output, inserting/removing the headphone plug, changing the GAIN switch setting, or turning the amplifier on while the volume level is set to loud. If you do not want to use this function, set the menu setting item [AUTO VOLUME DOWN] to [OFF] (page 29).

Noise is generated.

Noise may be generated when using the computer on the following status.

- Multiple playback software programs ("Hi-Res Audio Player" or other third-party playback software) are running, and are being used alternately.
- Depending on the operation of other running software while playing, noise may be generated.

Noise may be generated in the following case.

- When playing the DSD signal while headphones with the noise canceling function are connected to the amplifier, noise may be generated.

A clicking noise may be heard from the amplifier in the following case.

- When selecting the PRE OUT L/R jacks for output, a clicking noise may be heard from the amplifier.

USB-B

USB device is not detected.

- Turn the amplifier off, remove the USB device, turn the amplifier on, then connect the USB device again.
- The USB device may not work properly. Refer to its operating instructions to resolve the problem.

Sound is output from the speaker of the connected computer.

- When the connected computer is Windows, check that the dedicated driver is installed on the computer (page 21).
- Check that the playback device on your computer is set to "Sony Headphone Amplifier Driver." If it is not, change the OS setting of the computer.

Index

A

Active speaker 17
ANALOG IN FORMAT 29
Audio output jacks 17
AUTO STANDBY 29
AUTO VOLUME DOWN 29
AV equipment 11

B

Balanced connection 14
Battery 9

C

CD player 11
Computer 13

D

D.C.PHASE LINEARIZER 28
DIMMER 28
DISPLAY 28
Display window 26
Driver for the USB port 21
DSD RE. indicator 4
DSD REMASTERING 28
DSEE HX 28

G

GAIN 20, 25

H

Headphone jack 5
Headphones 14
Hi-Res Audio Player 22

I

Integrated amplifier 17

L

LR BALANCE 29

M

Mac 21
Menu item list 28

O

OVER CURRENT 31

P

Precautions/Specifications 2
PRE OUT 17, 29
PROTECTOR 30

R

Record player 11
Remote control 8

S

Smartphone 10

U

Unbalanced connection 16

W

WALKMAN® 10
Windows 21

X

XLR4 5