THINKWARE DASH CAM™

FA200

User Guide

This product records videos while the vehicle is operating.
Read and follow the instructions in this guide to properly use and maintain the product.

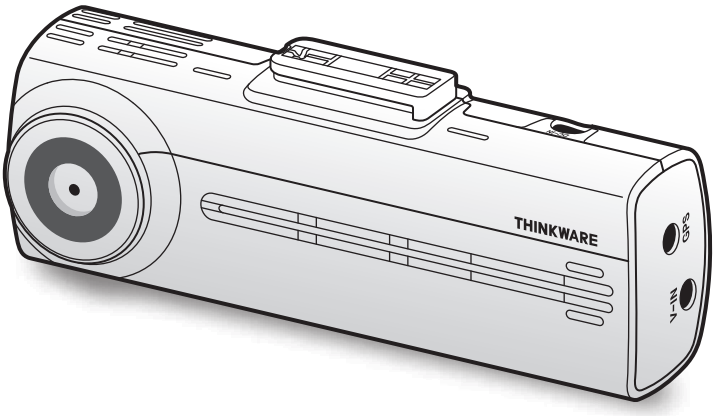

CE RoHS VCI

Before using the product

About the product

This product records videos while the vehicle is operating. Use this product only for reference when investigating incidents or road accidents. This product is not guaranteed to record and cloud service for ALL events. The device may not properly record accidents with small impacts that are too minor to activate the impact sensor or accidents with massive impacts that cause the vehicle's battery voltage to deviate.

Video recording does not begin until the product is completely turned on (booted up). To ensure that all vehicle events are recorded, wait until the product is completely booted up after turning it on, and then begin operating the vehicle.

THINKWARE is not responsible for any loss caused by an accident, nor is it responsible for providing any support regarding the outcome of an accident.

Depending on the vehicle's configuration or operating conditions, such as the installation of remote door lock devices, ECU settings, or TPMS settings, some product features may not be supported, and different firmware versions may influence the product's performance or features.

About the user guide

The information provided in the guide may change when the manufacturer updates its service policy.

This user guide is intended for THINKWARE FA200 models only, and it may contain technical errors, editorial errors, or missing information.

Copyrights

All rights for the content and maps in this guide are reserved by THINKWARE and are protected under copyright laws. All unauthorized duplication, revision, publication, or distribution of this guide without written consent from THINKWARE is prohibited and is eligible for criminal charges.

Registered trademarks

THINKWARE FA200 is a registered trademark of THINKWARE.

Other product logos and service names in this guide are trademarks of the relevant companies.

Industry Canada Radiation Exposure Statement

This equipment complies with IC radiation exposure limits set forth for an uncontrolled environment. This equipment should be installed and operated with minimum distance 20 cm between the radiator & your body.

FCC Statement

This device complies with Part 15 of the FCC Rules. Operation is subject to the following two conditions: (1) this device may not cause harmful interference, and (2) this device must accept any interference received, including interference that may cause undesired operation.

This equipment has been tested and found to comply with the limits for a Class B digital device, pursuant to Part 15 of the FCC Rules. These limits are designed to provide reasonable protection against harmful interference in a residential installation. This equipment generates, uses and can radiate radio frequency energy and, if not installed and used in accordance with the instructions, may cause harmful interference to radio communications. However, there is no guarantee that interference will not occur in a particular installation. If this equipment does cause harmful interference to radio or television reception, which can be determined by turning the equipment off and on, the user is encouraged to try to correct the interference by one or more of the following measures:

- Reorient or relocate the receiving antenna.
- Increase the separation between the equipment and receiver.
- Connect the equipment to an outlet on a circuit different from that to which the receiver is connected.
- Consult the dealer or an experienced radio/TV technician for help.
- This appliance and its antenna must not be co-located or operation in conjunction with any other antenna or transmitter.
- A minimum separation distance of 20cm must be maintained between the antenna and the person for this appliance to satisfy the RF exposure requirements.

FCC CAUTION: Any changes or modifications to the equipment not expressly approved by the party responsible for compliance could void your authority to operate the equipment.

FCC ID: 2ADTG-F200

Information to user : RSS-247

This device complies with Industry Canada's licence-exempt RSSs.

Please be cautioned the changes or modifications not expressly approved by the party responsible for compliance could void the user's authority to operate the equipment.

Notice: Operation is subject to the following two conditions : (1) this device may not cause interference, and (2) this device must accept any interference, including interference that may cause undesired operation of the device.

This Class B digital apparatus complies with Canadian ICES-003.

IC: 12594A-F200

Contents

Safety information 6

1. Product overview 9

1.1 Included items 9

1.1.1 Standard items 9

1.1.2 Accessories (sold separately) 9

1.2 Part names 10

1.2.1 Front camera (main unit) - front view 10

1.2.2 Front camera (main unit) - rear view 11

1.2.3 Rear camera (optional) 11

1.3 Removing and inserting the memory card 12

2. Installing the product 13

2.1 Installing the front camera (main unit) 13

2.1.1 Selecting an installation location 13

2.1.2 Securing the product 13

2.1.3 Connecting the power cable 15

2.2 Installing the rear camera (optional) 16

2.2.1 Selecting an installation location 16

2.2.2 Securing the rear camera 17

2.2.3 Connecting the rear camera cable 18

3. Using recording features 19

3.1 Turning the product on or off 19

3.2 Learning about file storage locations 19

3.3 Using the continuous recording feature 20

3.4 Recording manually 20

3.5 Using parking mode 21

4. Using the mobile viewer 22

4.1 Connect the product to a smartphone 22

4.1.1 Connecting the product to an Android device 22

4.1.2 Connecting the product to an iOS device 23

4.2 Mobile viewer screen layout 24

4.3 Playing recorded videos on the mobile viewer 25

4.4 Video control menu overview 25

5. Using the PC viewer 26

5.1 System requirements 26

5.2 PC viewer for Windows 26

5.2.1 Installing the PC viewer (for Windows) 26

5.2.2 PC viewer screen layout (for Windows) 27

5.2.3 Playing recorded videos on the PC viewer (for Windows) 28

5.2.4 Video control menu overview (for Windows) 29

5.3 PC viewer for Mac 30

5.3.1 Installing the PC viewer (for Mac) 30

5.3.2 PC viewer screen layout (for Mac) 31

5.3.3 Playing recorded videos on the PC viewer (for Mac) 32

5.3.4 Video control menu overview (for Mac) 33

6. Settings 34

6.1 Managing the memory card 34

6.1.1 Partitioning the memory card 34

6.1.2 Formatting the memory card 34

6.1.3 Configuring the video overwriting function34

6.2 Setting the camera 35

6.2.1 Setting the brightness of the front camera35

6.2.2 Setting the brightness of the rear camera35

6.3 Setting recording features 36

6.3.1 Setting the continuous impact detection sensitivity 36

6.3.2 Setting parking mode 36

6.3.3 Setting the impact sensitivity in parking mode 36

6.3.4 Setting the motion detection sensitivity 37

6.3.5 Setting the record timer feature 37

6.3.6 Setting the battery protection feature 38

6.3.7 Setting the battery cutoff voltage feature 38

6.3.8 Setting the battery protection feature for wintertime 38

6.4 Setting road safety features 39

6.4.1 Setting the safety cameras 39

6.4.2 Setting the mobile zone alert 39

6.5 Configuring the system settings 39
6.5.1 Setting the display language 39
6.5.2 Adjusting the system volume 40
6.5.3 Setting the time zone 40
6.5.4 Synchronizing the date and time with your mobile 40
6.5.5 Setting the daylight saving time 41
6.5.6 Setting the speed unit 41
6.5.7 Setting the speed stamp 41

7. Accessing the product information 42
7.1 Viewing the product information 42
7.2 Accessing and configuring the GPS 42

8. Upgrading the firmware 43

9. Troubleshooting 44

10. Specifications 45

Safety information

Read the following safety information to properly use the product.

Safety symbols in this guide

"Warning" - Indicates a potential hazard which, if not avoided, may result in injury or death.

"Caution" - Indicates a potential hazard which, if not avoided, may result in minor injury or property damage.

"Note" - Provides useful information to help users better utilize the product's features.

Safety information for proper use

Driving and product operation

- **Do not operate the product while driving a vehicle.** Distraction while driving may cause accidents and result in injury or death.
- **Install the product in places where the driver's view is not obstructed.** Obstruction of the driver's vision may cause accidents and result in injury or death. Check with your state and municipal laws before mounting the product to the windshield.

Power supply

- **Do not operate or handle the power cable with wet hands.** Doing so may result in electrocution.
- **Do not use damaged power cables.** Doing so may result in electrical fire or electrocution.
- **Keep the power cable away from all heat sources.** Failure to do so may cause the power cord insulation to melt, resulting in electrical fire or electrocution.
- **Use the power cable with the correct connector and make sure the power cable is connected securely and is firmly in place.** Failure to do so may result in electrical fire or electrocution.
- **Do not modify or cut the power cable.** Also, do not place heavy objects on the power cable or pull, insert, or bend the power cable using excessive force. Doing so may result in electrical fire or electrocution.

- **Use only genuine accessories from THINKWARE or an authorized THINKWARE dealer.** THINKWARE does not guarantee compatibility and normal operation of third-party accessories.
- **When connecting the power cable to the product, ensure that the connection between the cable plug and the power cable connector on the product is secure.** If the connection is loose, the power cable may become disconnected due to vehicle vibration. Video recording is not available if the power connector is disconnected.

Children and pets

- **Ensure that the product is out of the reach of children and pets.** If the product breaks, it may result in fatal damage.

Other information about the product

Product management and operation

- **Do not expose the product to direct sunlight or intense light.** The lens or internal circuitry may fail otherwise.
- **Use the product at a temperature between 14°F and 140°F (-10°C to 60°C) and store the product at a temperature between -4°F and 158°F (-20°C to 70°C).** The product may not function as designed and some permanent physical damages may result if it is operated or stored out of the specified temperature ranges. Such damages are not covered by the warranty.
- **Frequently check the product for the proper installation position.** Impact caused by extreme road conditions may alter the installation position. Ensure that the product is positioned as instructed in this guide.
- **Do not apply excessive force when pressing the buttons.** Doing so may damage the buttons.
- **Do not use chemical cleaners or solvents to clean the product.** Doing so may damage plastic components of the product. Clean the product using a clean, soft, and dry fabric.
- **Do not disassemble the product or subject the product to impact.** Doing so may damage the product. Unauthorized disassembly of the product voids the product warranty.
- **Handle with care.** If you drop, mishandle, or expose the product to external shocks, it may cause damage and/or result in the malfunction of the product.
- Do not attempt to insert foreign objects into the device.
- **Avoid excessive humidity and do not allow any water to enter the product.** Electronic components inside the product may fail if exposed to humidity or water.

- **Depending on the make and model of your car, the power may be constantly supplied to the dash cam even when the ignition is turned off. Installation of the device to a continuously powered 12V outlet could result in vehicle battery drainage.**
- This device is designed to record video while the vehicle is in operation. The quality of the video might be affected by weather conditions and the road environment, such as whether it is day or night, presence of street lighting, entering/exiting tunnels, and the surrounding temperature.
- THINKWARE is NOT responsible for the loss of any recorded video during operation.
- Although the device was designed to withstand high-impact car collisions, THINKWARE does not guarantee the recording of accidents when the device is damaged as a result of the accident.
- Keep the windshield and camera lens clean for optimal video quality. Particles and substances on the camera lens or windshield may reduce the quality of the recorded videos.
- This device is intended to be used inside the vehicle only.

1. Product overview

1.1 Included items

Ensure that all the items are included when you open the product box.

1.1.1 Standard items

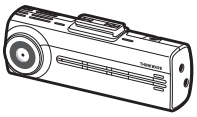

Front camera (main unit)

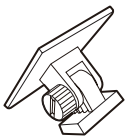

Mount

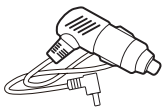

Car charger

Adhesive cable holder

MicroSD memory card with adapter (consumable)

Quick start guide & Warranty / CS information / User guide (stored in the microSD card)

The standard items may change without prior notice.

1.1.2 Accessories (sold separately)

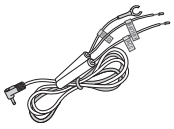

Hardwiring cable

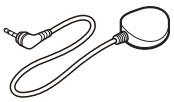

External GPS receiver

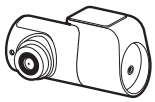

Rear camera

- GPS reception may be affected by interference from the vehicle's windshield, particularly those treated with anti-UV protective coating, or built-in defroster. It is recommended that an external GPS receiver is used when the GPS signal is weak or when you cannot get a GPS signal.
- To connect the external GPS receiver to the front camera, carefully remove the front camera's GPS port cover with a pry tool or a small flat-head screwdriver to access the port.

1.2 Part names

1.2.1 Front camera (main unit) - front view

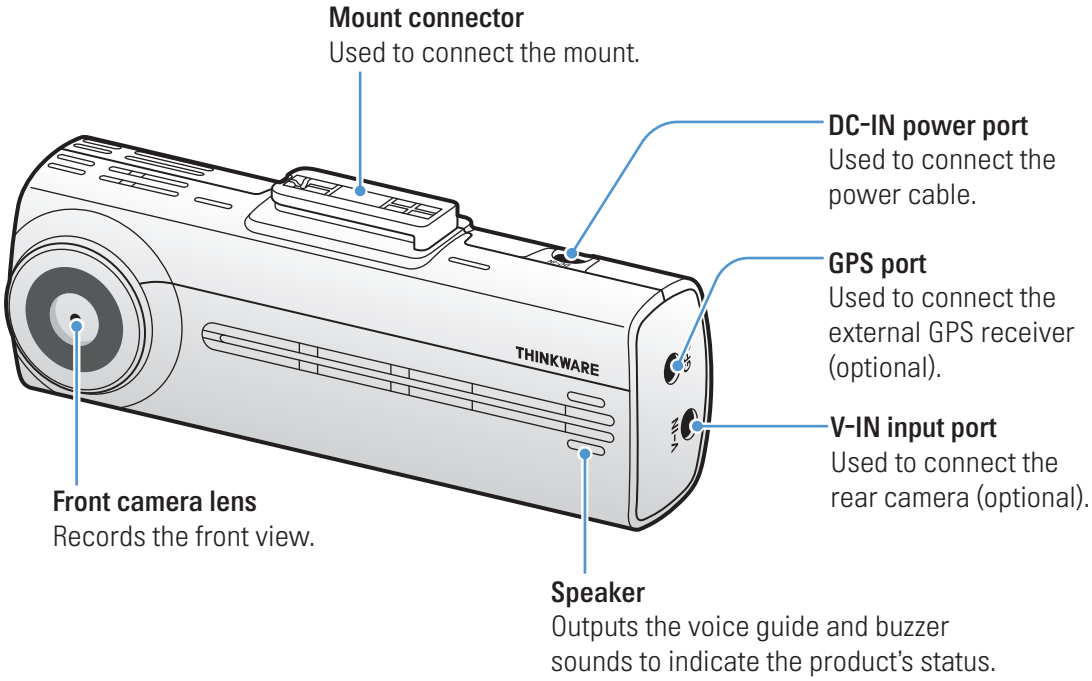

1.2.2 Front camera (main unit) - rear view

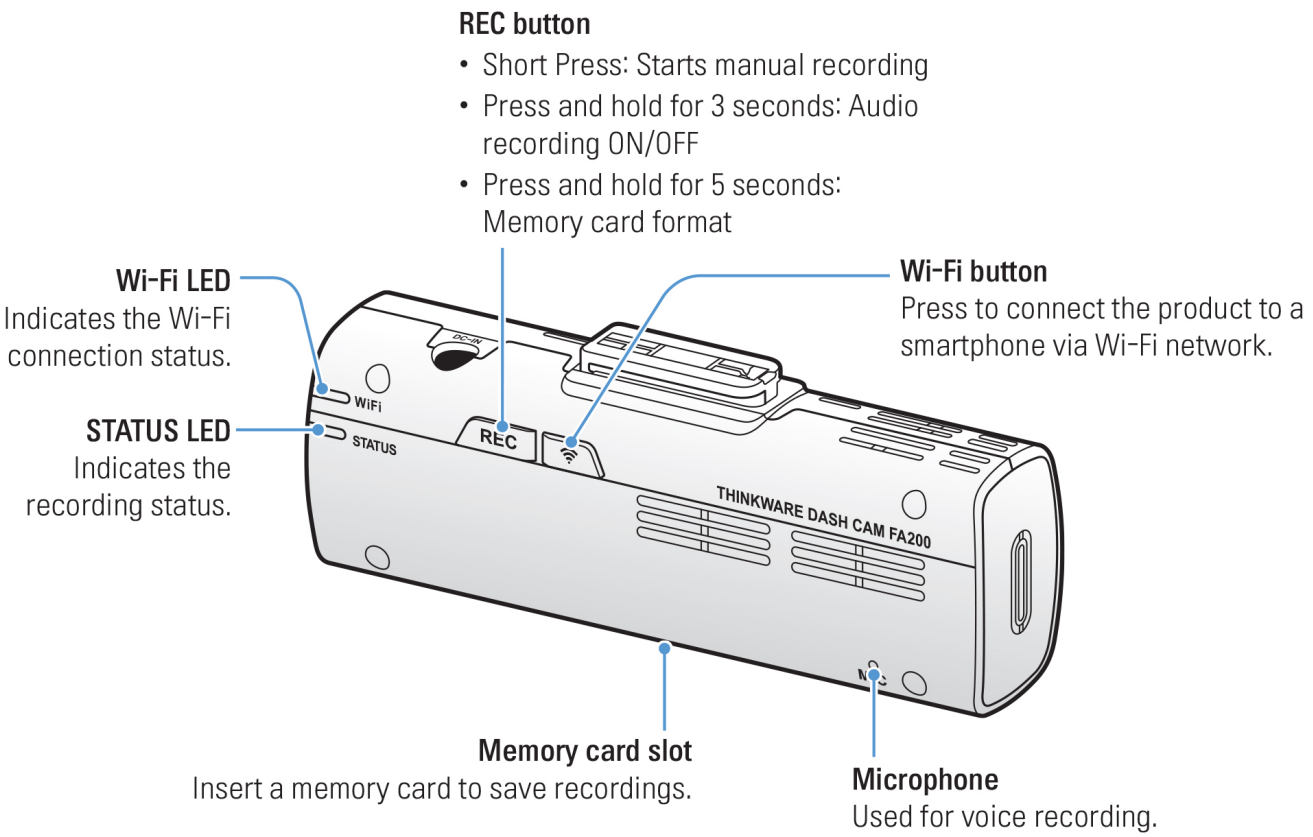

1.2.3 Rear camera (optional)

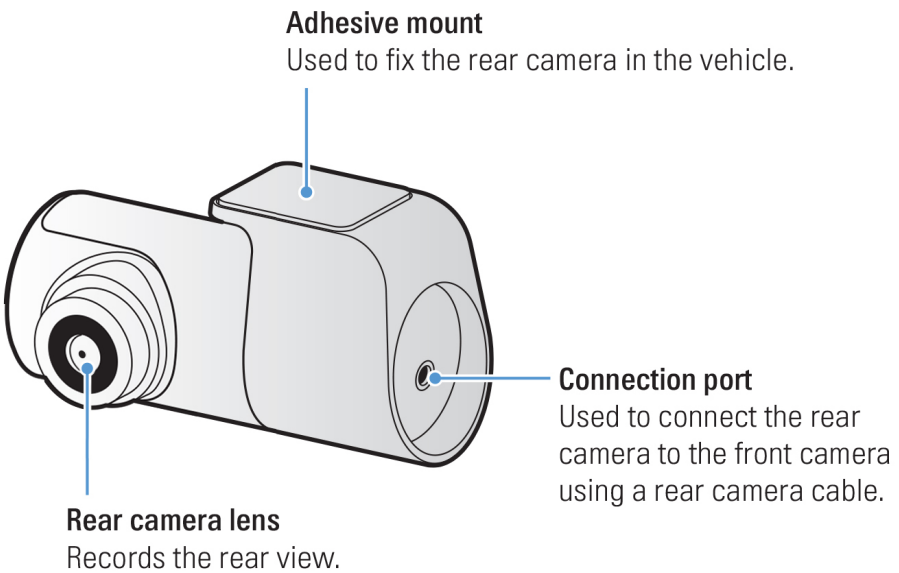

ɟed.

1.3 Removing and inserting the memory card

Follow the instructions to remove the memory card from the product or to insert the memory card into the product.

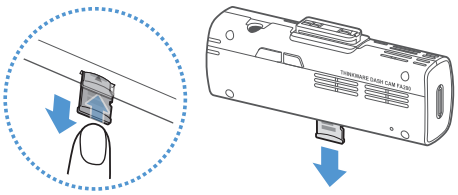

Removing the memory card

Ensure that the product is turned off, and then gently push the bottom of the memory card with your fingernail. The lower part of the memory card will be exposed.

Remove it from the product.

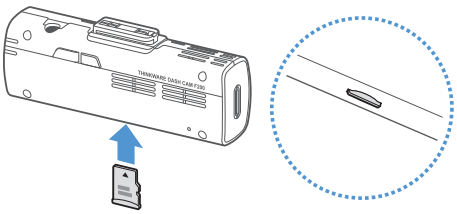

Inserting the memory card

Insert the memory card into the memory card slot, paying attention to the direction of the memory card, and then push the memory card into the slot until you hear a click.

Before inserting the memory card, ensure that the metal contacts on the memory card are facing toward the lens of the product.

- Ensure that the product is turned off before removing the memory card. The recorded video files may be corrupted or lost if you remove the memory card while the product is on.
- Ensure that the memory card is in the correct direction before inserting it into the product. The memory card slot or the memory card may be damaged if it is inserted incorrectly.
- Use only authentic memory cards from THINKWARE. THINKWARE does not guarantee compatibility and normal operation of third-party memory cards.

To prevent loss of recorded video files, periodically back up the video files on a separate storage device.

2. Installing the product

2.1 Installing the front camera (main unit)

Follow the instructions to properly install the product.

2.1.1 Selecting an installation location

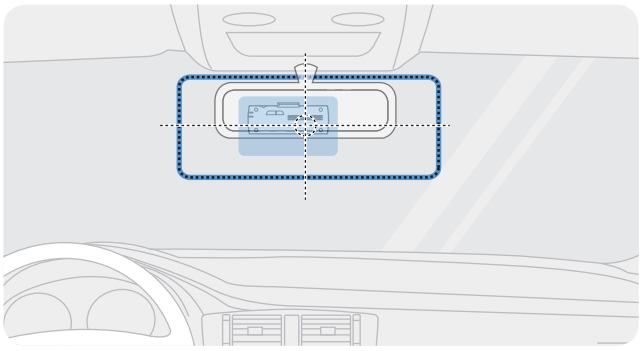

Select an installation location that can record the entire view in front of the vehicle without obstructing the driver's vision. Ensure that the front camera lens is located in the center of the windshield.

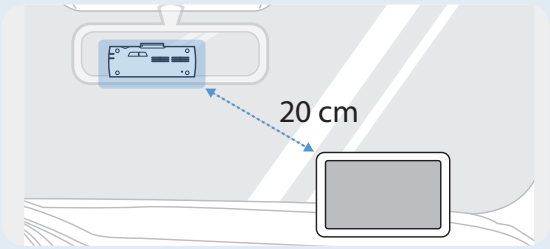

If a GPS navigating device is installed on the dashboard, its GPS reception may be affected depending on the dashboard camera's installation location.
Adjust the installation location of the GPS navigating device to ensure that the two devices are separated by at least 20 centimeters (approximately 8 inches).

2.1.2 Securing the product

Follow the instructions to secure the product at the installation location.

1 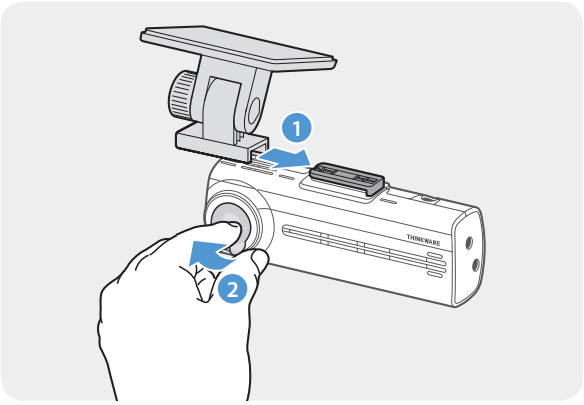

Align the mount to the mount rail on the product, and then slide it until you hear a click (1). Then, carefully remove the protective film (2).

2 After determining the installation location, wipe the installation location on the windshield with a dry cloth.

3

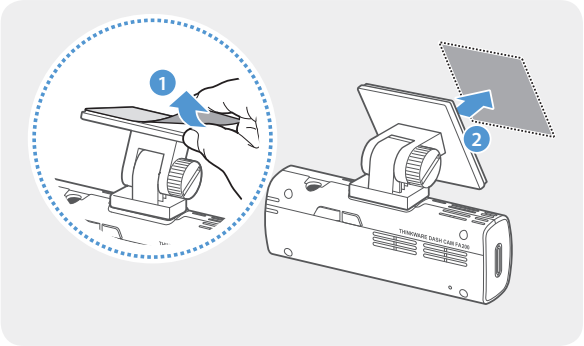

Remove the protective film from the adhesive mount, and then press the mount to the installation location.

4

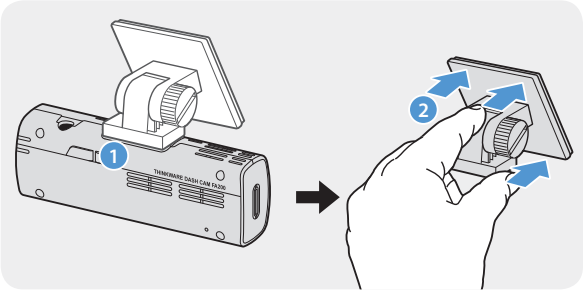

Remove the product from the mount and push the mount against the windshield to ensure that the mount is firmly fixed.

5

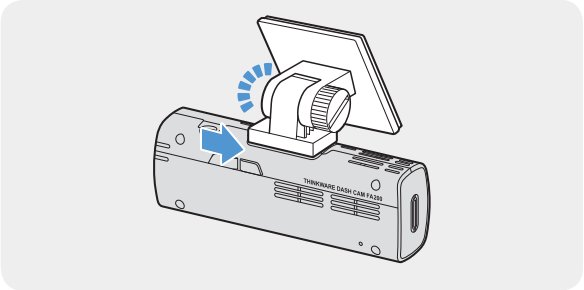

Align the product to the mount, and then slide it into the locking position until you hear a click.

- The product may fall and be damaged during vehicle operation if it is not firmly fixed to the mount.
- If you need to remove the mount from the windshield to alter the installation location, be careful not to damage the windshield's film coat.

6

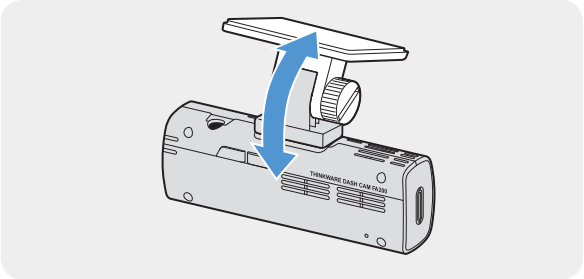

Set the vertical angle of the camera appropriately and tighten the screw of the mount firmly by using a flat-head screwdriver or a coin.

To confirm the camera angle, record a video after installation and check the video using the mobile viewer or the PC viewer. If necessary, adjust the camera angle again.
For more information about the mobile viewer or the PC viewer, refer to "4. Using the mobile viewer" on page 22 or "5. Using the PC viewer" on page 26.

2.1.3 Connecting the power cable

When the engine and electrical accessories are turned off, connect the car charger.

The hardwiring cable (optional) must be professionally installed to the vehicle by a trained mechanic.

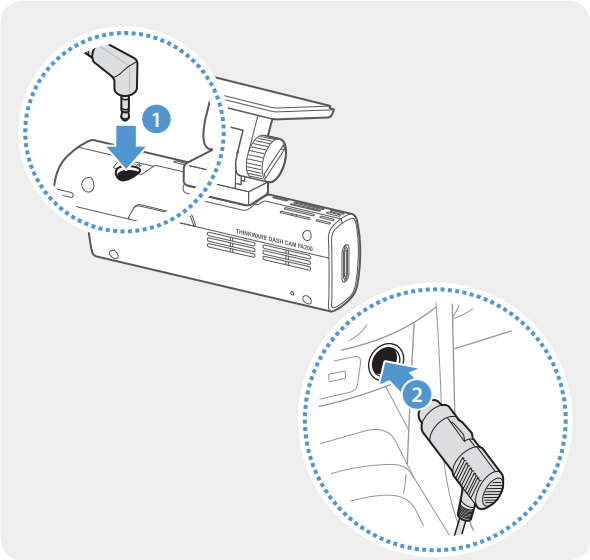

Connect the cigar socket power cable to the product's DC-IN power connector and insert the cigar jack into the vehicle's power socket.

The location and specifications of the power socket may differ by vehicle make and model.

- Use the authentic THINKWARE cigar socket power cable (optional). If you use another manufacturer's cable, the product may be damaged or electrical fire or electrocution may result due to the voltage difference.
- Do not cut or modify the power cable yourself. Doing so may damage the product or the vehicle.
- For safe driving, arrange the cables to prevent the driver's vision from being obstructed or interfering with driving.

2.2 Installing the rear camera (optional)

Refer to the following instructions to properly install the rear camera.

2.2.1 Selecting an installation location

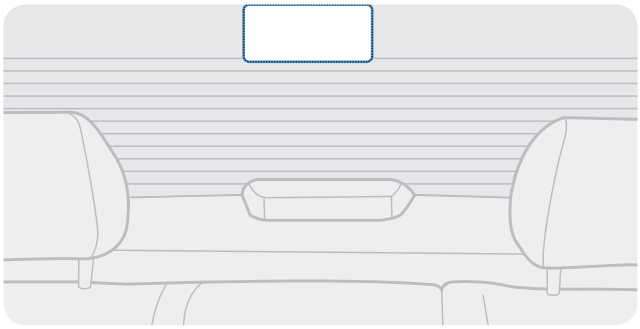

Select a location on the rear windshield where there is no defrost grid wire and the camera can record the entire rear view.

- For vehicles with a sunshade attached to the rear windshield, you must select a location where using the sunshade will not interfere with camera operation.
- The adhesive part of the rear camera should not touch the defrost grid.

2.2.2 Securing the rear camera

Refer to the following instructions to secure the product to the installation location.

1 After determining the installation location, wipe the installation surface of the windshield with a dry cloth.

> Check the installation location before you secure the rear camera to the rear windshield. After securing the rear camera to the windshield, it is hard to remove the camera or change the installation location due to the strong adhesive.

2 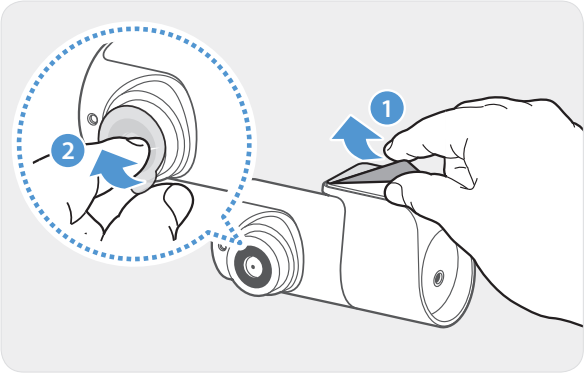

Remove the protective film from the adhesive mount and camera lens.

3 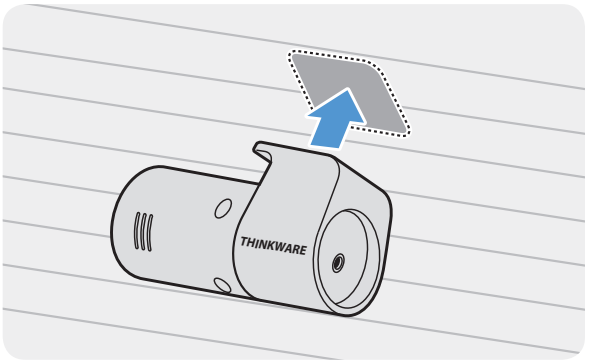

Attach the product with the THINKWARE logo facing indoors and press the adhesive tape firmly to secure the camera.

> If the product is fixed in reverse, the rear view will be recorded upside down.

4 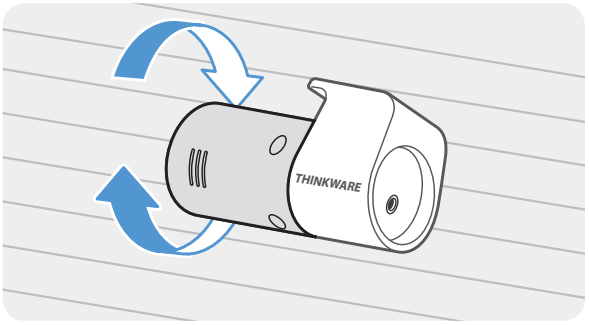

Adjust the camera's vertical angle.

2.2.3 Connecting the rear camera cable

Power off the product and connect the rear camera cable to the front camera (main unit).

1 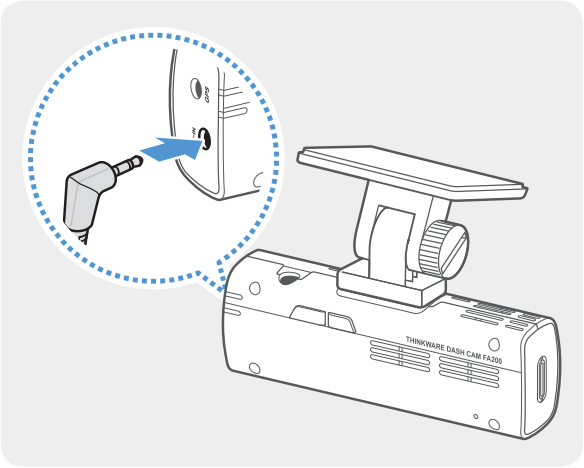

Connect one end of the rear camera cable to the front camera's V-IN port.

2 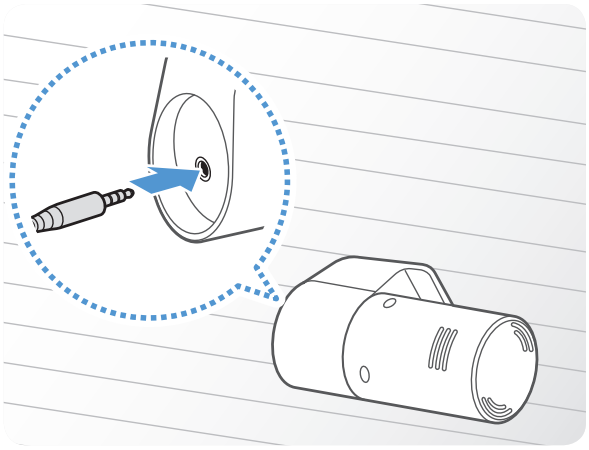

Connect the other end of the rear camera cable to the rear camera's connection port.

For safe driving, arrange the cables to prevent the driver's vision from being obstructed or interfering with driving.

3 Turn on the ACC or start the engine to check if the product is powered on. After the product is powered on, the Status LED and the voice guidance will be turned on.

The product is powered on when the ACC mode is turned on or when the engine starts.

3. Using recording features

3.1 Turning the product on or off

The product is turned on automatically and continuous recording starts when you turn on the ACC or start the engine.

Wait until the product is completely booted up after turning it on, and then begin operating the vehicle. The video recording does not begin until the product is completely turned on (booted up).

3.2 Learning about file storage locations

Videos are stored in the following folders according to their recording mode.

On the mobile viewer	Continuous	Continuous Incident	Manual Recording	Motion Detection	Parking Incident
In the memory card	cont_rec	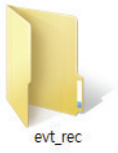 evt_rec	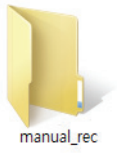 manual_rec	motion_rec	parking_rec

Play videos on Window/Mac computer or using the Thinkware mobile app. If you play videos by inserting the memory card in devices such as a smartphone or a tablet PC, the video files may be lost.

A file name is composed of the recording start date and time, and the recording option.

	YYYY_MM_DD	HH_MM_SS	
REC_	2017_07_01_	10_25_30_	F.MP4
REC_	2017_07_01_	10_25_30_	R.MP4

Recording conditions

- F: Front camera
- R: Rear camera (when optional rear camera is equipped)

3.3 Using the continuous recording feature

Connect the power cable to the product's DC-IN power port and then turn on the vehicle's electrical accessories or start the engine. The status LED and the voice guide are turned on, and the continuous recording starts.

During continuous recording, the product operates as follows.

Mode	Operation description	Recording LED (REC)
Continuous recording	During driving, videos are recorded in 1 minute segments and stored in the "**cont_rec**" folder.	(light on)
Incident continuous recording*	When an impact to the vehicle is detected, a video is recorded for 20 seconds, from 10 seconds before the detection to 10 seconds after the detection, and stored in the "**evt_rec**" folder.	(flickers)

* When an impact to the vehicle is detected during continuous recording, incident continuous recording starts with a buzzer sound.

- Wait until the product is completely booted up after turning it on, and then begin operating the vehicle. The video recording does not begin until the product is completely turned on (booted up).
- When incident continuous recording starts, the buzzer sounds as a notification. This function saves you time when checking the status LED to know the operating status of the product.
- To enable recording, you must insert a memory card into the product.

3.4 Recording manually

You can record a scene you want to capture while driving and store it as a separate file.

To start manual recording, press the **REC** button. Then, manual recording will start with the voice guide. During manual recording, the product operates as follows.

Mode	Operation description	Recording LED (REC)
Manual recording	When you press the **REC** button, a video will be recorded for 1 minute, from 10 seconds before to 50 seconds after pressing the button, and stored in the "**manual_rec**" folder.	(flickers)

Using parking mode

When the product is connected to the vehicle via the hardwiring cable (optional), the operating mode is switched to parking mode with the voice guide after the engine or electrical accessories are turned off.

- Parking mode operates only when the hardwiring cable is connected. The hardwiring cable (optional) must be professionally installed to the vehicle by a trained mechanic.
- To use all recording modes, you must insert a memory card into the product.
- Depending on the battery charging status of the vehicle, the duration of parking mode may differ. If you want to use parking mode for an extended period, check the battery level to prevent battery depletion.

If you do not want to use parking mode or you want to change the mode settings, from the mobile viewer, tap **Dash Cam Settings > Record Settings**.

Refer to the following table to set the **Parking Mode** options.

Option		Operation description	Recording LED (REC)
Motion Detection	No motion or impact detected	Monitors movement in the area or impacts to the vehicle. Video will be recorded only when motion or an impact is detected.	(light on)
	Motion detected	When a moving objects is detected while parking, a video is recorded for 20 seconds, from 10 seconds before detection to 10 seconds after detection, and stored in the **"motion_rec"** folder.	(flickers)
	Impact detected	When an impact is detected while parking, a video is recorded for 20 seconds, from the moment 10 seconds before detection to 10 seconds after detection, and stored in the **"parking_rec"** folder.	(flickers)
Time Lapse	No impact detected	A videos is recorded at a rate of 2 fps for 10 minutes, compressed into a 2-minute long file, and stored in the **"motion_timelapse_rec"** folder. Since the video file recorded with this option is small, you can record a long video.	(light on)
	Impact detected	When an impact is detected while parking, a video is recorded for 100 seconds at a rate of 2 fps, from the moment 50 seconds before detection to 50 seconds after detection, and stored in the **"parking_rec"** folder after being compressed into a 20-second long file. (The buzzer will sound.)	(flickers)
Energy Saving	No impact detected	Monitors impacts to the vehicle. Video will be recorded only when an impact is detected.	(light on)
	Impact detected	When an impact is detected while parking, a video is recorded for 20 seconds from within 1 second after detection and stored in the "**parking_rec**" folder.	(flickers)
OFF		The product is powered off when electric accessories and the engine are turned off.	Off

You cannot use Motion Detection, Time Lapse, or Energy Saving at the same time.

If parking mode settings are changed, the videos recorded with the previous settings will be deleted. To prevent data loss, back up all parking mode videos before changing parking mode settings.

4. Using the mobile viewer

You can view and manage recorded videos and configure various product features on your smartphone.

One of the following environments is required to use the **THINKWARE CLOUD** application:

- Android 4.4 (KitKat) or higher
- iOS 8.0 or higher

4.1 Connect the product to a smartphone

4.1.1 Connecting the product to an Android device

1 On your Android device, open the Play Store, and download and install **THINKWARE CLOUD**.

2 Run **THINKWARE CLOUD**.

3 Tap **Dash cam connection is required.** at the bottom of the screen and follow the on-screen instructions to connect the product to an Android device.

The Wi-Fi password is required when you connect the product to a smartphone for the first time. Enter "123456789" in the password input field.

4.1.2 Connecting the product to an iOS device

1 On your iOS device, open the App Store, and download and install **THINKWARE CLOUD**.

2 Run **THINKWARE CLOUD**.

3 Tap **Dash cam connection is required.** at the bottom of the screen.

4 Tap **Wi-Fi Connection**.

5 On the product, press the Wi-Fi ( ) button.

6 From the **THINKWARE CLOUD**, tap **Next**.

The Wi-Fi Settings screen will appear.

7 From the network list, select the Wi-Fi network starting with "Thinkware."

8 Enter "123456789" in the **Password** field, and tap **Join**.

The product is connected to your iOS device via Wi-Fi.

4.2 Mobile viewer screen layout

The following provides brief information about the mobile viewer's screen layout.

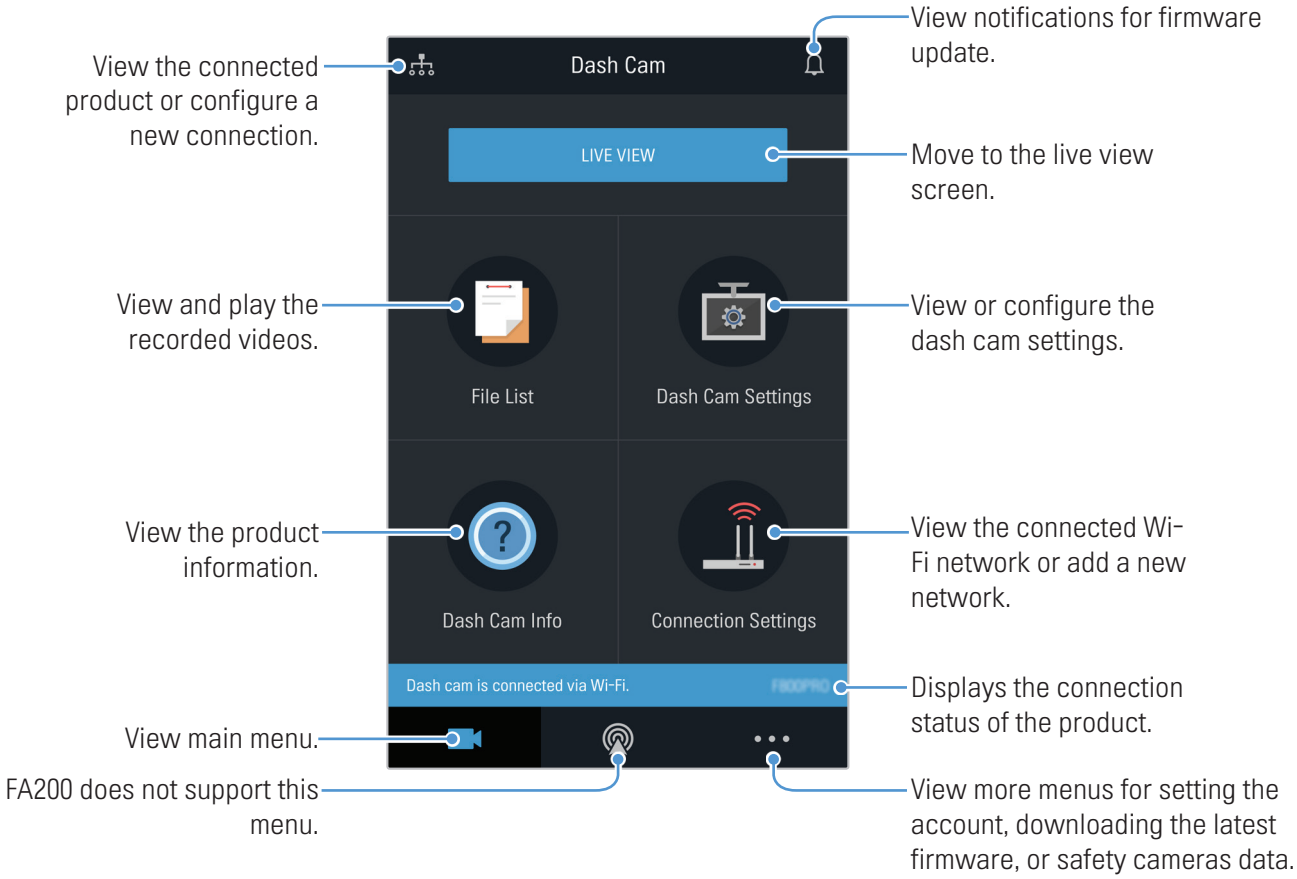

4.3 Playing recorded videos on the mobile viewer

Follow the instructions to play recorded videos.

> The recording and the Advanced Driver Assistance System (ADAS) features of the product are disabled while checking the video file list or playing a video on the mobile viewer.

1. On your smartphone, run the Thinkware Cloud application and connect the product to the smartphone.
2. From the home screen of the mobile viewer, tap **File List**. The categories will be displayed.
3. Tap the desired category. The video file list will appear.
4. If necessary, tap **All**, **Front**, or **Rear** to filter the video file list by camera.
5. Select the desired video.

4.4 Video control menu overview

The following provides brief information about the mobile viewer's video control menu.

> The recording and the Advanced Driver Assistance System (ADAS) features of the product are disabled while checking the video file list or playing a video on the mobile viewer.

5. Using the PC viewer

You can view and manage the recorded videos and configure various product features on your PC.

5.1 System requirements

The following are the system requirements for running the PC viewer.

- Processor: Intel Core i5, or higher
- Memory: 4 GB or more
- Operating system: Windows 7 or later (64-bit is recommended), macOS X10.8 Mountain Lion or later
- Other: DirectX 9.0 or higher / Microsoft Explorer version 7.0 or higher

The PC viewer will not operate properly on PC systems running an operating system other than those listed in the system requirements.

5.2 PC viewer for Windows

5.2.1 Installing the PC viewer (for Windows)

You can download the latest PC viewer software from the THINKWARE website (http://www.thinkware.com/Support/Download).

The PC viewer installation file (setup.exe) is stored in the root folder of the memory card that is provided with the product. Follow the instructions to install the PC viewer on your PC.

1 Insert the memory card into a memory card reader connected to your PC.

2 Run the installation file, and complete the installation according to the instructions given in the installation wizard.
After the installation is complete, there will be a shortcut icon to THINKWARE Dashcam Viewer.

5.2.2 PC viewer screen layout (for Windows)

The following provides brief information about the PC viewer's screen layout.

5.2.3 Playing recorded videos on the PC viewer (for Windows)

Follow the instructions to play recorded videos.

1 Turn off the product and remove the memory card.

2 Insert the memory card into a memory card reader connected to your PC.

3 Double-click the shortcut to the PC viewer ( ) to open the program. The video files in the memory card will be automatically added to the playlist in the bottom-right corner of the PC viewer screen. The playlist section layout is as follows.

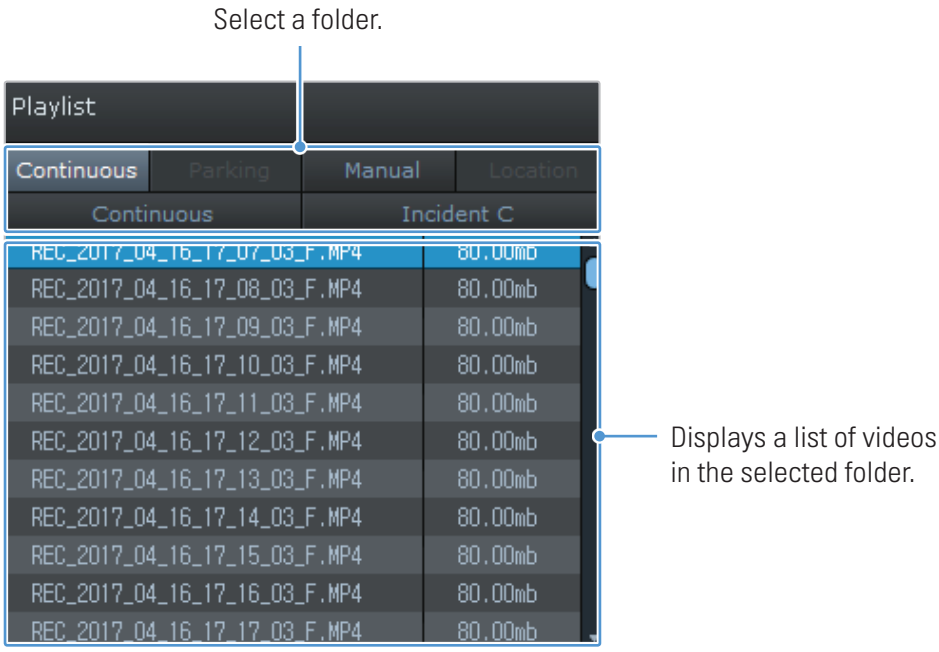

4 Double-click a video file after selecting a video folder, or click the Play button (▶) after selecting a video file. The selected video file will be played.

If the video files on the memory card are not automatically added to the playlist when you run the PC viewer, click **File▼ 〉 Open**, select the removable storage device for the memory card, and click **Confirm**.

5.2.4 Video control menu overview (for Windows)

The following provides brief information about the PC viewer's video control menu.

Number	Item	Description
1	Play the previous file	Play the previous file in the currently selected folder.
2	Rewind by 10 sec.	Rewind the video by 10 sec.
3	Play/Pause	Play or pause the selected video file.
4	Stop	Stop playing the current video. The progress bar will move to the beginning of the video.
5	Skip forward by 10 sec.	Fast forward the video by 10 sec.
6	Play the next file	Play the next file in the currently selected folder.
7	Enable/Disable playing the next file in the playlist	Enables or disables the feature for playing the next file in the playlist.
8	Enlarge/Reduce image	Enlarge or reduce the size of the current video.
9	Save	Save the current video on your PC.
10	Volume	Adjust the volume of the current video.

5.3 PC viewer for Mac

5.3.1 Installing the PC viewer (for Mac)

You can download the latest PC viewer software from the THINKWARE website (http://www.thinkware.com/Support/Download).

The PC viewer installation file is stored in the root folder of the memory card that is provided with the product. Follow the instructions to install the PC viewer on your PC.

1 Insert the memory card into your PC using a SD card reader or SD card adapter provided.

2 Move the file named "dashcam_viewer_X.X.X.dmg" to the desktop.

3 Double-click the dashcam_viewer_X.X.X.dmg and click Open Dashcam Viewer application.

The THINKWARE Dashcam Viewer opens.

5.3.2 PC viewer screen layout (for Mac)

The following provides brief information about the PC viewer's screen layout.

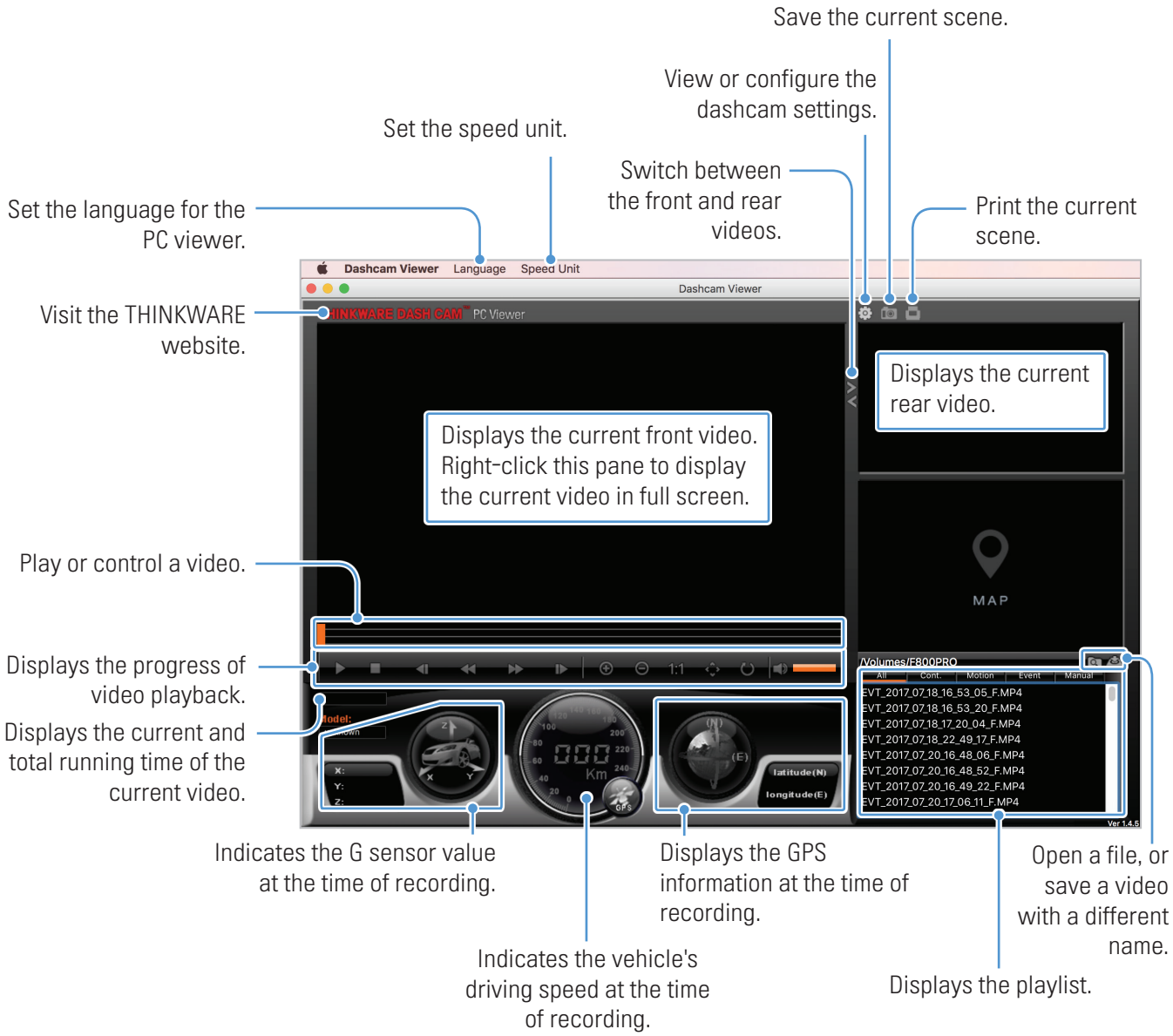

5.3.3 Playing recorded videos on the PC viewer (for Mac)

Follow the instructions to play recorded videos.

1 Turn off the product and remove the memory card.

2 Insert the memory card into your Mac using a SD card reader or SD card adapter provided.

3 Open the PC viewer.

4 Click and locate the memory card.

The video files in the memory card will be automatically added to the playlist in the bottom-right corner of the PC viewer screen. The playlist section layout is as follows.

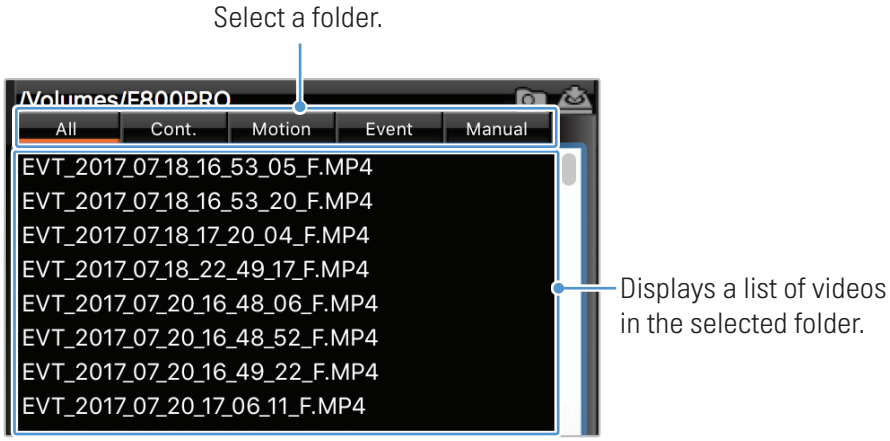

5 Double-click a video file after selecting a video folder, or click the Play button (▶) after selecting a video file. The selected video file will be played.

5.3.4 Video control menu overview (for Mac)

The following provides brief information about the PC viewer's video control menu.

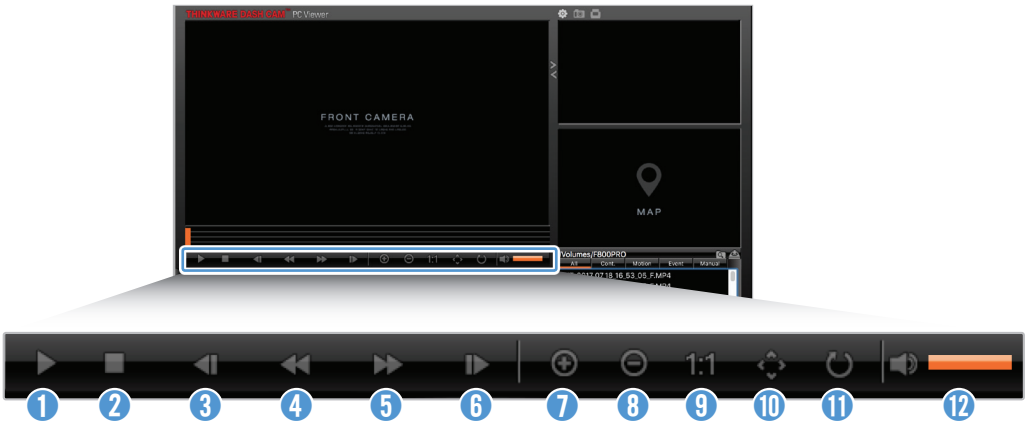

Number	Item	Description
1	Play/Pause	Play or pause the selected video file.
2	Stop	Stop playing the current video. The progress bar will move to the beginning of the video.
3	Play the previous file	Play the previous file in the currently selected folder.
4	Rewind by 1 frame	Rewind the video by 1 frame.
5	Skip forward by 1 frame	Fast forward the video by 1 frame.
6	Play the next file	Play the next file in the currently selected folder.
7	Zoom in	Zoom into the current video.
8	Zoom out	Zoom out of the current video.
9	Restore image size	Restore the size of the current video to the original size.
10	Display scrollbar	Display the scrollbar when the image is enlarged.
11	Reverse image	Reverse the video upside down.
12	Volume	Adjust the volume of the current video.

6. Settings

You can set the product features according to your needs to your needs and preferences using the mobile viewer or the PC viewer. The following procedures are based on the mobile viewer.

The product will stop recording while configuring settings on the mobile viewer.

6.1 Managing the memory card

6.1.1 Partitioning the memory card

You can partition the memory card to adjust the storage space for different types of video recordings. Refer to the following instructions to partition the memory card.

1. From the mobile viewer, tap **Dash Cam Settings** > **Memory Card Settings**.
2. From **Memory Partition**, select the desired memory partition type. The new setting is applied automatically.

6.1.2 Formatting the memory card

This menu allows you to format the memory card that is inserted in the product. Refer to the following instructions to format the memory card.

1. From the mobile viewer, tap **Dash Cam Settings** > **Memory Card Settings** and tap the **Format** button under **Formatting Memory Card**.
2. From **Formatting Memory Card**, tap **OK** to proceed with memory formatting. All the data stored on the memory card will be erased after the formatting. Tap **Cancel** to cancel memory formatting.

6.1.3 Configuring the video overwriting function

This menu allows new video files to overwrite the oldest video files in the storage reserved for each mode.

1. From the mobile viewer, tap **Dash Cam Settings** > **Memory Card Settings**.
2. From **Overwrite Videos**, select the modes to allow video overwriting. The new setting is applied automatically.

6.2 Setting the camera

You can adjust the brightness of the front and rear view.

6.2.1 Setting the brightness of the front camera

You can set the brightness of the front view recording. Refer to the following instructions to set the brightness.

1 From the mobile viewer, tap **Dash Cam Settings** > **Camera Settings**.

2 From **Brightness-front**, select **Dark**, **Mid**, or **Bright**. The new setting is applied automatically.

6.2.2 Setting the brightness of the rear camera

You can set the brightness of the rear view recording. Refer to the following instructions to set the brightness.

1 From the mobile viewer, tap **Dash Cam Settings** > **Camera Settings**.

2 From **Brightness-rear**, select **Dark**, **Mid**, or **Bright**. The new setting is applied automatically.

6.3 Setting recording features

You can set and adjust various features for recording, including the detection sensitivity for recording when the product detects an impact during continuous recording.

6.3.1 Setting the continuous impact detection sensitivity

You can set the detection sensitivity for recording when an impact is detected while driving. When you set the sensitivity, you must consider the road conditions, traffic situation, and your driving style.

1 From the mobile viewer, tap **Dash Cam Settings** > **Record Settings**.

2 From **Continuous Mode Incident Recording Sensitivity**, select the desired sensitivity. The new setting is applied automatically.

6.3.2 Setting parking mode

You can set the operating mode of the product while the vehicle is parked. Follow the instructions to set parking mode.

To use parking mode, you must install the hardwiring cable (optional). If continuous power is not supplied to the product, the product will stop recording when the vehicle engine is turned off.

For more information about parking mode, refer to "3.5 Using parking mode"

1 From the mobile viewer, tap **Dash Cam Settings** > **Record Settings**.

2 From **Parking Mode**, select the desired parking mode option. The new setting is applied automatically.

6.3.3 Setting the impact sensitivity in parking mode

You can set the detection sensitivity for recording when impact is detected while parking. Refer to the following instructions to set the parking impact sensitivity.

1 From the mobile viewer, tap **Dash Cam Settings** > **Record Settings**.

2 From **Impact Sensitivity in Parking Mode**, select the desired sensitivity. The new setting is applied automatically.

6.3.4 Setting the motion detection sensitivity

The Motion detection feature records a video when a moving object is detected near your vehicle. Refer to the following instructions to set the motion detection sensitivity.

1. From the mobile viewer, tap **Dash Cam Settings > Record Settings**.
2. From **Motion Detection Sensitivity**, select the desired sensitivity. The new setting is applied automatically.

6.3.5 Setting the record timer feature

When you activate the record timer feature, the product will record a video in parking mode at a preset time. Refer to the following instructions to set the time.

1. From the mobile viewer, tap **Dash Cam Settings > Record Settings**.
2. From **Record Timer**, select the desired time. The new setting is applied automatically.

The vehicle battery will not be charged while the vehicle is parked. If you record in parking mode for an extended period, the vehicle's battery may be depleted and you may not be able to start the vehicle.

6.3.6 Setting the battery protection feature

You can set to use the battery protection feature. Follow the instructions to activate the feature.

1 From the mobile viewer, tap **Dash Cam Settings** > **Record Settings**.

2 From **Battery Protection**, select **Enabled** or **Disabled**. The new setting is applied automatically.

6.3.7 Setting the battery cutoff voltage feature

You can set the voltage limit to stop recording at when using the Low Voltage Off feature. Refer to the following instructions to set the voltage.

- The battery cutoff voltage can be set only when the **Battery Protection** setting is set to **Enabled**.
- If the Off voltage value is too low, the product may consume the battery completely depending on the conditions like the vehicle type or temperature.

1 From the mobile viewer, tap **Dash Cam Settings** > **Record Settings**.

2 From **12V** or **24V**, select the desired voltage.

For vehicles using a 12 V battery (most passenger vehicles), configure the **12V** setting. For vehicles using the 24 V battery (trucks and commercial vehicles), adjust the **24V** setting. The new setting is applied automatically.

6.3.8 Setting the battery protection feature for wintertime

You can set the month(s) during the cold season to apply the low voltage protection level of the vehicle. Refer to the following instructions to set the month(s).

1 From the mobile viewer, tap **Dash Cam Settings** > **Record Settings**.

2 From **Wintertime Battery Protection**, select the month(s) to apply the battery protection feature. The new setting is applied automatically.

6.4 Setting road safety features

You can activate or deactivate a safety camera alert system.

6.4.1 Setting the safety cameras

When the vehicle approaches or passes the speed limit zone, the safety camera alert system will collect GPS signals and safety camera data. Refer to the following instructions to enable or disable this feature.

1. From the mobile viewer, tap **Dash Cam Settings** > **Road Safety Settings**.
2. From **Safety Cameras**, select **Enabled** or **Disabled**. The new setting is applied automatically.

6.4.2 Setting the mobile zone alert

Follow the instructions to turn on or off the mobile zone alert.

1. From the mobile viewer, tap **Dash Cam Settings** > **Road Safety Settings**.
2. From **Mobile Zone Alert**, select **Enabled** or **Disabled**. The new setting is applied automatically.

6.5 Configuring the system settings

This menu allows you to configure the hardware settings that are globally applied to the system during operation, such as the display language and screen brightness.

6.5.1 Setting the display language

Select a language to display on the screen. Follow the instructions to select a language.

1. From the mobile viewer, tap **Dash Cam Settings** > **System Settings**.
2. From **Language**, select the desired language. The new setting is applied automatically.

6.5.2 Adjusting the system volume

This menu allows you to adjust the voice guidance volume. Follow the instructions to adjust the volume.

1 From the mobile viewer, tap **Dash Cam Settings** > **System Settings**.

2 From **Volume**, select **0**, **1**, **2**, or **3**. The new setting is applied automatically.

If you select **0**, the voice guidance will be disabled.

6.5.3 Setting the time zone

Follow the instructions to set the time zone.

1 From the mobile viewer, tap **Dash Cam Settings** > **System Settings**.

2 From **Time Zone**, select the desired time zone. The new setting is applied automatically.

6.5.4 Synchronizing the date and time with your mobile

You can synchronize the date and time of your mobile with the dashcam. Follow the instructions to synchronize the date and time with your mobile.

1 From the mobile viewer, tap **Dash Cam Settings** and tap the **Synchronize with mobile** button under **Date / Time**.

2 From **Date / Time Settings**, tap **OK** to proceed with synchronizing the date and time with your mobile. The date and time settings on your mobile will be applied to the dashcam. Tap **Cancel** to cancel synchronization with your mobile.

You can also set the date and time of the dashcam on the PC viewer. To set the date and time, click **Settings** > **Dash Cam Settings** > **System Settings**, and set the date and time in the **Date / Time** field. To apply the current time of your PC, click **Get Current Time**.

6.5.5 Setting the daylight saving time

Follow the instructions to set the daylight saving time.

1 From the mobile viewer, tap **Dash Cam Settings** > **System Settings**.

2 From **Daylight Saving**, select **Enabled** or **Disabled**. The new setting is applied automatically.

6.5.6 Setting the speed unit

Follow the instructions to set the speed unit.

1 From the mobile viewer, tap **Dash Cam Settings** > **System Settings**.

2 From **Speed Unit**, select **km/h** or **mph**.

6.5.7 Setting the speed stamp

Follow the instructions to turn on or off the speed stamp feature.

1 From the mobile viewer, tap **Dash Cam Settings** > **System Settings**.

2 From **Speed Stamp**, select **Enabled** or **Disabled**. The new setting is applied automatically.

7. Accessing the product information

New users may benefit from the basic product information that can be accessed from the Menu screen.

7.1 Viewing the product information

From the mobile viewer, tap **Dash Cam Info** to view product information. The following product information will be displayed on the screen.

- Model Name
- Memory Size
- Firmware Ver.
- LOCAL ID
- Safety Camera Ver.
- GPS Info

7.2 Accessing and configuring the GPS

A GPS module is used to include the location data in the recorded videos. From the mobile viewer, tap **Dash Cam Info 〉 GPS Info** to view the GPS features. The connection status, signal strength, time (UTC), vehicle speed, current altitude, and Horizontal Dilution of Precision (HDOP) are displayed on the screen.

Tap the to initialize the GPS, and allow it to locate the current position.

Horizontal Dilution of Precision (HDOP)
HDOP is a value that refers to GPS deviation due to satellite positioning.

8. Upgrading the firmware

A firmware upgrade is provided to enhance the product's features, operation or to increase stability. For optimal operation of the product, ensure that you keep the firmware up to date.

Follow the instructions to upgrade the firmware.

1. On your PC, open a web browser and go to http://www.thinkware.com/Support/Download.
2. Select the product and download the latest firmware upgrade file.
3. Unzip the downloaded file.
4. Disconnect power to the product and remove the memory card.
5. Open the memory card on a PC and copy the firmware upgrade file to the root folder of the memory card.
6. While the power is disconnected from the product, insert the memory card into the memory card slot on the product.
7. Connect the power cable to the product, and then turn on the power (ACC ON) or start the engine to turn on the product. The firmware upgrade starts automatically, and the system will restart once the firmware update is completed.

   Do not disconnect the power or remove the memory card from the product during the upgrade. Doing so may cause serious damage to the product, or to the data stored in the memory card.

You can also update the firmware from the mobile viewer and the PC viewer.

9. Troubleshooting

The following table lists the problems users may encounter while using the product and measures to resolve them. If the problem persists after taking the measures provided in the table, contact the customer service center.

Problems	Solution
Cannot power on the product	• Make sure the power cable (the car charger or the hardwiring cable) is connected to the vehicle and the product properly. • Check the vehicle's battery level.
The voice guide and/or buzzer do not sound.	Check if the volume is set to the minimum. For more information about how to adjust the volume, refer to "6.5.2 Adjusting the system volume".
The video is unclear or hardly visible.	• Ensure that the protective film on the camera lens has been removed. The video may look unclear if the protective film is still on the camera lens. • Check the installation location of the front or rear camera, turn on the product, and then adjust the camera's viewing angle.
The memory card cannot be recognized.	• Ensure that the memory card has been inserted in the correct direction. Before inserting the memory card, ensure that the metal contacts on the memory card are facing toward the lens of the product. • Turn off the power, remove the memory card, and then check to ensure that the contacts in the memory card slot are not damaged. • Ensure that the memory card is an authentic product distributed by THINKWARE. THINKWARE does not guarantee compatibility and normal operation of third-party memory cards.
The recorded video cannot be played on a PC.	The recorded videos are stored as MP4 video files. Ensure that the video player installed on your PC supports the playback of MP4 video files.
GPS signal cannot be received even though the external GPS receiver is installed.	The GPS signal may not be received in out-of-service areas, or if the product is located between tall buildings. Also, GPS signal reception may not be available during storms or heavy rain. Try again on a clear day at a location that is known to have a good GPS reception. It may take up to 5 minutes until GPS reception is established.

10. Specifications

To see the product specifications, refer to the following table.

Item	Specification	Remarks
Model name	FA200	
Dimensions / Weight	98.5 x 34 x 22 mm / 54 g	
Memory	microSD memory card	- UHS-1: 16 GB, 32 GB, 64 GB, 128GB - Class10: 8 GB
Recording mode	Continuous Rec	Records videos in 1-minute segments (dual channels are supported for recording the front and rear view)
	Incident Rec	Records 10 seconds before and after the incident (total 20 seconds)
	Manual Rec	Records from 10 seconds before and 50 seconds after manually starting the recording (total 1 minute)
	Parking Rec (parking mode)	Requires the hardwiring cable installation
	Audio Recording	
Camera sensor	2.1 Megapixel, ON Semiconductor CMOS	
Angle of view (Lens)	Approximately 140° (diagonally)	
Video	FHD (1920 X 1080) /H.264/ file extension: MP4	
Frame rate	Maximum 30 fps	Applies equally to the front / rear recording
Audio	PCM	
Acceleration sensor	3-axis acceleration sensor (3D, ±3G)	5 levels for sensitivity adjustment available
Rear camera (optional)	V-IN port	Optional accessory that requires separate purchase
GPS	External GPS	Safety driving section alert supported
Power input	DC 12 / 24 V supported	
Power consumption	2ch: 3.1 W / 1ch: 2.3 W (Wi-Fi on)	Except for the fully charged supercapacitor / GPS
Auxiliary power unit	Super capacitor	
LED indicator	Rear: Status LED, Wi-Fi LED	
Alarm	Built-in speakers	Voice guide (buzzer sounds)

Item	Specification	Remarks
Operating temperature	14 – 140°F / -10 – 60°C	
Storage temperature	-4 – 158°F / -20 – 70°C	
Connection Interface	1 x V-IN port	

Before contacting a service center

Please back up all important data stored in the memory card. The data in the memory card may be deleted during repair. Every product requested for repair is regarded as a device that has had its data backed up. The customer service center does not back up your data. THINKWARE is not responsible for any loss, such as data loss.

http://www.thinkware.com

Ver. 1.1 (July. 2019)