ELATION PROFESSIONAL

PROTEUS™
SMARTY HYBRID

user manual

©2022 ELATION PROFESSIONAL all rights reserved. Information, specifications, diagrams, images, and instructions herein are subject to change without notice. ELATION PROFESSIONAL logo and identifying product names and numbers herein are trademarks of ELATION PROFESSIONAL. Copyright protection claimed includes all forms and matters of copyrightable materials and information now allowed by statutory or judicial law or hereinafter granted. Product names used in this document may be trademarks or registered trademarks of their respective companies and are hereby acknowledged. All non-ELATION brands and product names are trademarks or registered trademarks of their respective companies.

ELATION PROFESSIONAL and all affiliated companies hereby disclaim all liabilities for property, equipment, building, and electrical damages, injuries to any persons, and direct or indirect economic loss associated with the use or reliance of any information contained within this document, and/or because of the improper, unsafe, insufficient and negligent assembly, installation, rigging, and operation of this product.

Elation Professional USA | 6122 S. Eastern Ave. | Los Angeles, CA. 90040
323-582-3322 | 323-832-9142 fax | www.elationlighting.com | info@elationlighting.com

Elation Professional B.V. | Junostraat 2 | 6468 EW Kerkrade, The Netherlands
+31 45 546 85 66 | +31 45 546 85 96 fax | www.elationlighting.eu | info@elationlighting.eu

Elation Professional Mexico | AV Santa Ana 30 | Parque Industrial Lerma, Lerma, Mexico 52000
+52 (728) 282-7070

D O C U M E N T V E R S I O N

Due to additional product features and/or enhancements, an updated version of this document may be available online. Please scan the QR Code with your mobile device or visit www.elationlighting.com for the latest revision/update of this manual, before installation and/or programming.

Date	Document Version	Software Version ≥	DMX Channel Modes	Notes
08/28/19	1.0	1.1.3	20 / 34	Initial release.
08/14/20	1.2	N/C	NO CHANGE	Updated thermal
10/16/20	1.4	N/C	NO CHANGE	Updated specifications
3/11/21	1.6	N/C	NO CHANGE	Updated sun protection, FCC, and primary/secondary modes
6/22/21	1.8	N/C	NO CHANGE	Updated Maintenance and Dimensional Drawings.
5/16/22	2.0	N/C	NO CHANGE	Updated Fixture Installation to add orientation guidelines.

CONTENTS

General Information	4
Warranty Returns (USA Only)	5
Safety Guidelines	6
Discharge Lamp Warning	8
Maintenance Guidelines	9
Fixture Overview	10
Colors, Gobos, Animation	11
Custom Gobos	12
Gobo Installation	12
Lamp Replacement	20
Fixture Installation	26
System Menu	32
DMX Channel Functions and Values	40
Error Codes	49
Specifications	50
Optional Accessories	53

GENERAL INFORMATION

INTRODUCTION

Please read and understand the instructions in this manual carefully and thoroughly before attempting to operate this device. These instructions contain important safety and use information.

IP65 RATED

An IP rated lighting fixture is one, which is commonly installed in outdoor environments and has been designed with an enclosure that effectively protects the ingress (entry) of external foreign objects such as dust and water. The **International Protection (IP)** rating system is commonly expressed as **"IP"** (Ingress Protection) followed by two numbers (i.e. IP65) where the numbers define the degree of protection. The first digit (Foreign Bodies Protection) indicates the extent of protection against particles entering the fixture and the second digit (Water Protection) indicates the extent of protection against water entering the fixture. An **IP65** rated lighting fixture is one, which has been designed and tested to protect against the ingress of dust **(6)** and low-pressure water jets from any direction **(5)**.

UNPACKING

Every device has been thoroughly tested and has been shipped in perfect operating condition. Carefully check the shipping carton for damage that may have occurred during shipping. If the carton is damaged, carefully inspect the device for damage, and be sure all accessories necessary to install and operate the device have arrived intact. In the event damage has been found or parts are missing, please contact our customer support team for further instructions. Please do not return this device to your dealer without first contacting customer support. Please do not discard the shipping carton in the trash. Please recycle whenever possible.

BOX CONTENTS

Omega Brackets (x2)
IP Rated 5pin DMX Cable
IP Rated Ethernet RJ45 Cable
Power Cable

CUSTOMER SUPPORT

Contact **ELATION Service** for any product related service and support needs.
Also visit forums.elationlighting.com with questions, comments or suggestions.

ELATION SERVICE USA - Monday - Friday 8:00am to 4:30pm PST
323-582-3322 | Fax 323-832-9142 | support@elationlighting.com

ELATION SERVICE EUROPE - Monday - Friday 08:30 to 17:00 CET
+31 45 546 85 63 | Fax +31 45 546 85 96 | support@elationlighting.eu

REPLACEMENT PARTS please visit parts.elationlighting.com

ULTIMATE WARRANTY (USA ONLY)

A. This ULTIMATE WARRANTY covers the first two years of operation or 6,000 hours of use, whichever comes first, based on regular maintenance for the fixture and lamp. This comprehensive warranty for a 2-year period covers material and workmanship of the fixture, including the highly efficient Philips Platinum FLEX 200 lamp. Elation Professional warrants product rechargeable batteries to be free of manufacturing defects in material and workmanship for a period of six months (180 days) from the original date of purchase. This warranty shall be valid only if the product is purchased within the United States of America, including possessions and territories. It is the owner's responsibility to establish the date and place of purchase by acceptable evidence, at the time service is sought.

B. For warranty service, send the product only to the Elation Professional factory. All shipping charges must be pre-paid. If the requested repairs or service (including parts replacement) are within the terms of this warranty, Elation Professional will pay return shipping charges only to a designated point within the United States. If any product is sent, it must be shipped in its original package and packaging material. No accessories should be shipped with the product. If any accessories are shipped with the product, Elation Professional shall have no liability whatsoever for loss and/or or damage to any such accessories, nor for the safe return thereof.

C. This warranty is void if the product serial number and/or labels are altered or removed; if the product is modified in any manner which Elation Professional concludes, after inspection, affects the reliability of the product; if the product has been repaired or serviced by anyone other than the Elation Professional factory unless prior written authorization was issued to purchaser by Elation Professional; if the product is damaged because not properly maintained as set forth in the product instructions, guidelines and/or user manual.

D. This is not a service contract, and this warranty does not include any maintenance, cleaning, or periodic check-up. During the periods as specified above, Elation Professional will replace defective parts at its expense, and will absorb all expenses for warranty service and repair labor by reason of defects in material or workmanship. The sole responsibility of Elation Professional under this warranty shall be limited to the repair of the product, or replacement thereof, including parts, at the sole discretion of Elation Professional. All products covered by this warranty were manufactured after January 1, 1990, and bare identifying marks to that effect.

E. Elation Professional reserves the right to make changes in design and/or performance improvements upon its products without any obligation to include these changes in any products theretofore manufactured.

F. No warranty, whether expressed or implied, is given or made with respect to any accessory supplied with the products described above. Except to the extent prohibited by applicable law, all implied warranties made by Elation Professional in connection with this product, including warranties of merchantability or fitness, are limited in duration to the warranty periods set forth above. And no warranties, whether expressed or implied, including warranties of merchantability or fitness, shall apply to this product after said periods have expired. The consumer's and/or dealer's sole remedy shall be such repair or replacement as is expressly provided above; and under no circumstances shall Elation Professional be liable for any loss and/or damage, direct and/or consequential, arising out of the use of, and/or the inability to use, this product.

G. This warranty is the only written warranty applicable to Elation Professional products and supersedes all prior warranties and written descriptions of warranty terms and conditions heretofore published.

WARRANTY RETURNS

All returned service items whether under warranty or not, must be freight pre-paid and accompany a return authorization (R.A.) number. The R.A. number must be clearly written on the outside of the return package. A brief description of the problem as well as the R.A. number must also be written down on a piece of paper and included in the shipping container. If the unit is under warranty, you must provide a copy of your proof of purchase invoice. Items returned without a R.A. number clearly marked on the outside of the package will be refused and returned at customer's expense. You may obtain a R.A. number by contacting customer support.

SAFETY GUIDELINES

This fixture is a sophisticated piece of electronic equipment. To guarantee a smooth operation, it is important to follow all instructions and guidelines in this manual. Elation Professional is not responsible for injury and/or damages resulting from the misuse of this fixture due to the disregard of the information printed in this manual. Only qualified and/or certified personnel should perform installation of this fixture and only the original rigging parts (omega brackets) included with this fixture should be used for installation. Any modifications to the fixture and/or the included mounting hardware will void the original manufactures warranty and increase the risk of damage and/or personal injury.

PROTECTION CLASS 1 - FIXTURE MUST BE PROPERLY GROUNDED

THERE ARE NO USER SERVICEABLE PARTS INSIDE THIS UNIT.
DO NOT ATTEMPT ANY REPAIRS YOURSELF; DOING SO WILL VOID YOUR MANUFACTURES WARRANTY. DAMAGES RESULTING FROM MODIFICATIONS TO THIS FIXTURE AND/OR THE DISREGARD OF SAFETY INSTRUCTIONS AND GUIDELINES IN THIS MANUAL VOID THE MANUFACTURES WARRANTY AND ARE NOT SUBJECT TO ANY WARRANTY CLAIMS AND/OR REPAIRS.

DO NOT PLUG FIXTURE INTO A DIMMER PACK!
NEVER OPEN THIS FIXTURE WHILE IN USE!
UNPLUG POWER BEFORE SERVICING FIXTURE!
NEVER TOUCH FIXTURE DURING OPERATION, AS IT MAY BE HOT!
KEEP FLAMMABLE MATERIALS AWAY FROM FIXTURE!

NEVER LOOK DIRECTLY INTO THE LIGHT SOURCE!
RETINA INJURY RISK - MAY INDUCE BLINDNESS!
SENSITIVE PERSONS MAY SUFFER AN EPILEPTIC SHOCK!

ENSURE ALL CONNECTIONS AND END CAPS ARE PROPERLY SEALED WITH A DIELECTRIC GREASE (AVAILABLE AT MOST ELECTRICAL SUPPLIERS) TO PREVENT WATER CORROSION AND/OR ELECTRICAL SHORT CIRCUIT.

MINIMUM DISTANCE TO OBJECTS/SURFACES
MUST BE 49.2 FEET (15 METERS)
MAXIMUM TEMP OF EXTERNAL SURFACE 185° F (85°C)
MINIMUM DISTANCE OF INFLAMMABLE MATERIALS
FROM THE SURFACE 1.6 FEET (0.5 METER)

SAFETY GUIDELINES

RISK GROUP 3 - RISK OF EXPOSURE TO ULTRAVIOLET UV RADIATION! FIXTURE EMITS HIGH INTENSITY WAVELENGTH OF ULTRAVIOLET UV LIGHT FROM THE UV COLOR FILTER. WEAR PROPER EYE AND SKIN PROTECTION. AVOID PROLONGED PERIODS OF EXPOSURE TO UV COLOR FILTER. AVOID WEARING WHITE COLOR CLOTHING AND/OR USING UV PAINTS ON SKIN. AVOID DIRECT EYE AND/OR SKIN EXPOSURE AT DISTANCES LESS THAN 11 feet (3.3m). DO NOT OPERATE FIXTURE WITH DAMAGED/MISSING EXTERNAL COVERS. DO NOT LOOK DIRECTLY INTO THE UV LIGHT AND/OR VIEW UV LIGHT DIRECTLY WITH OPTICAL INSTRUMENTS THAT MAY CONCENTRATE THE LIGHT/RADIATION OUTPUT. INDIVIDUALS SUFFERING FROM A RANGE OF EYE CONDITIONS, SUNLIGHT EXPOSURE DIS-ORDERS, OR INDIVIDUALS USING PHOTOSENSITIVE MEDICATION, MAY RECEIVE DISCOMFORT IF EXPOSED TO THE ULTRAVIOLET UV LIGHT EMITTED FROM THE UV LED.

DO NOT TOUCH the fixture housing during operation. Turn OFF the power and allow approximately 15 minutes for the fixture to cool down before serving.
DO NOT shake fixture, avoid brute force when installing and/or operating fixture.
DO NOT operate fixture if the power cord is frayed, crimped, damaged and/or if any of the power cord connectors are damaged and do not insert into the fixture securely with ease. **NEVER** force a power cord connector into the fixture. If the power cord or any of its connectors are damaged, replace it immediately with a new one of similar power rating.
DO NOT block any air ventilation slots.
All fan and air inlets must remain clean and never blocked.
Allow approx. 6” (15cm) between fixture and other devices or a wall for proper cooling.
Always disconnect fixture from main power source before performing any type of service and/or cleaning procedure. Only handle the power cord by the plug end, never pull out the plug by tugging the wire portion of the cord.
During the initial operation of this fixture, a light smoke or smell may emit from the interior of the fixture. This is a normal process and is caused by excess paint in the interior of the casing burning off from the heat associated with the lamp and will decrease gradually over time.
Consistent operational breaks will ensure fixture will function properly for many years.
ONLY use the original packaging and materials to transport the fixture in for service.

DISCHARGE LAMP WARNING

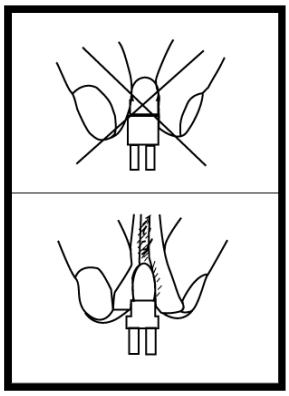

This fixture is fitted with a DISCHARGE LAMP, which is highly susceptible to damage if improperly handled. NEVER touch the lamp with your bare hands, as the oil from your hands will shorten the life of the lamp. **NEVER** move the fixture until the lamp has had ample time to cool. DISCHARGE LAMPS are NOT covered under warranty conditions. Avoid switching the fixture ON and OFF repeatedly in short intervals, as this will reduce lamp life and intensity. To achieve the intensity associated with discharge lamps, these lamps use gas sealed in a high-pressure environment to emit a brilliant output.

Due to the high pressure involved with the construction of the lamp, it **MAY EXPLODE DURING PROLONGED EXTENSIVE USE**. This risk is increased with age; added care is encouraged when dealing with older lamps. Thus, the lamp must always be replaced at the end of their recommended duty cycle. Extreme caution should be used when operating this or any fixture fitted with a gas discharge lamp.

UV RADIATION NOTICE

THIS FIXTURE EMITS INTENSE UV RADIATION, WHICH IS HARMFUL TO THE EYES AND SKIN. THE INTENSE LUMINANCE OF THE LAMP CAN CAUSE SEVERE DAMAGE TO THE RETINA. NEVER OPERATE THIS FIXTURE WITH ANY OF THE PROTECTIVE COVERS REMOVED. THESE COVERS HAVE BEEN SPECIALLY DESIGNED TO SHIELD AGAINST UV RADIATION.

LAMP REPLACEMENT

USE ONLY GENUINE ORIGINAL PHILIPS™ LAMPS. OTHER BRAND LAMPS WILL CAUSE DAMAGE AND WILL VOID FIXTURE WARRANTY!

DISCONNECT THE MAIN POWER SUPPLY BEFORE REPLACING LAMP!
FIXTURE MUST COOL FOR 60 MINUTES BEFORE REPLACING LAMP!

NEVER TOUCH LAMP WITH BARE HANDS, ALWAYS WEAR GLOVES!
OIL FROM HANDS WILL SHORTEN LIFE OF LAMP!

MAKE SURE ALL COVERS/PANELS ARE REPLACED/SECURED BEFORE OPERATING FIXTURE TO PREVENT ANY RISK AND/OR DAMAGE TO EYE RETINA FROM UV RADIATION EXPOSIURE!

MAINTENANCE GUIDELINES

DISCONNECT POWER BEFORE PERFORMING ANY MAINTENANCE!

CLEANING

Frequent cleaning is recommended to insure proper function, optimized light output, and an extended life. The frequency of cleaning depends on the environment in which the fixture operates: damp, smoky or particularly dirty environments can cause greater accumulation of dirt on the fixture's optics. Clean the external lens surface at least every 20 days with a soft cloth to avoid dirt/debris accumulation.
NEVER use alcohol, solvents, or ammonia-based cleaners.

MAINTENANCE

Regular inspections are recommended to insure proper function and extended life.
There are no user serviceable parts inside this fixture, please refer all other service issues to an authorized Elation service technician. Should you need any spare parts, please order genuine parts from your local Elation dealer.

Please refer to the following points during routine inspections:

- A detailed electric check by an approved electrical engineer every three months, to make sure the circuit contacts are in good condition and prevent overheating.
- Be sure all screws and fasteners are securely tightened at all times. Lose screws may fall out during normal operation resulting in damage or injury as larger parts could fall.
- Check for any deformations on the housing, color lenses, rigging hardware and rigging points (ceiling, suspension, trussing). Deformations in the housing could allow for dust to enter into the fixture. Damaged rigging points or unsecured rigging could cause the fixture to fall and seriously injure a person(s).
- Electric power supply cables must not show any damage, material fatigue or sediments. **NEVER** remove the ground prong from the power cable.

FIXTURE DISASSEMBLY

The following points should be observed after performing any maintenance procedure that requires disassembly of the unit:

- After the unit has been reassembled, open the valve, and allow the light to run for approximately 2 hours in order to dry out any moisture that has been trapped inside the fixture. The process should continue until indicated humidity drops below 15% for the head and 30% for the base.
- Once this has been achieved, the light can be switched off, but the unit should remain connected to power so that the cooling fan can cool down the unit. Please note that allowing cool down time should ALWAYS be done after lamp operation.
- Some units may require partial disassembly in order to gain access to the valve. Please contact Elation service for information regarding the location and access procedure for the valve on your specific unit model.

FIXTURE OVERVIEW

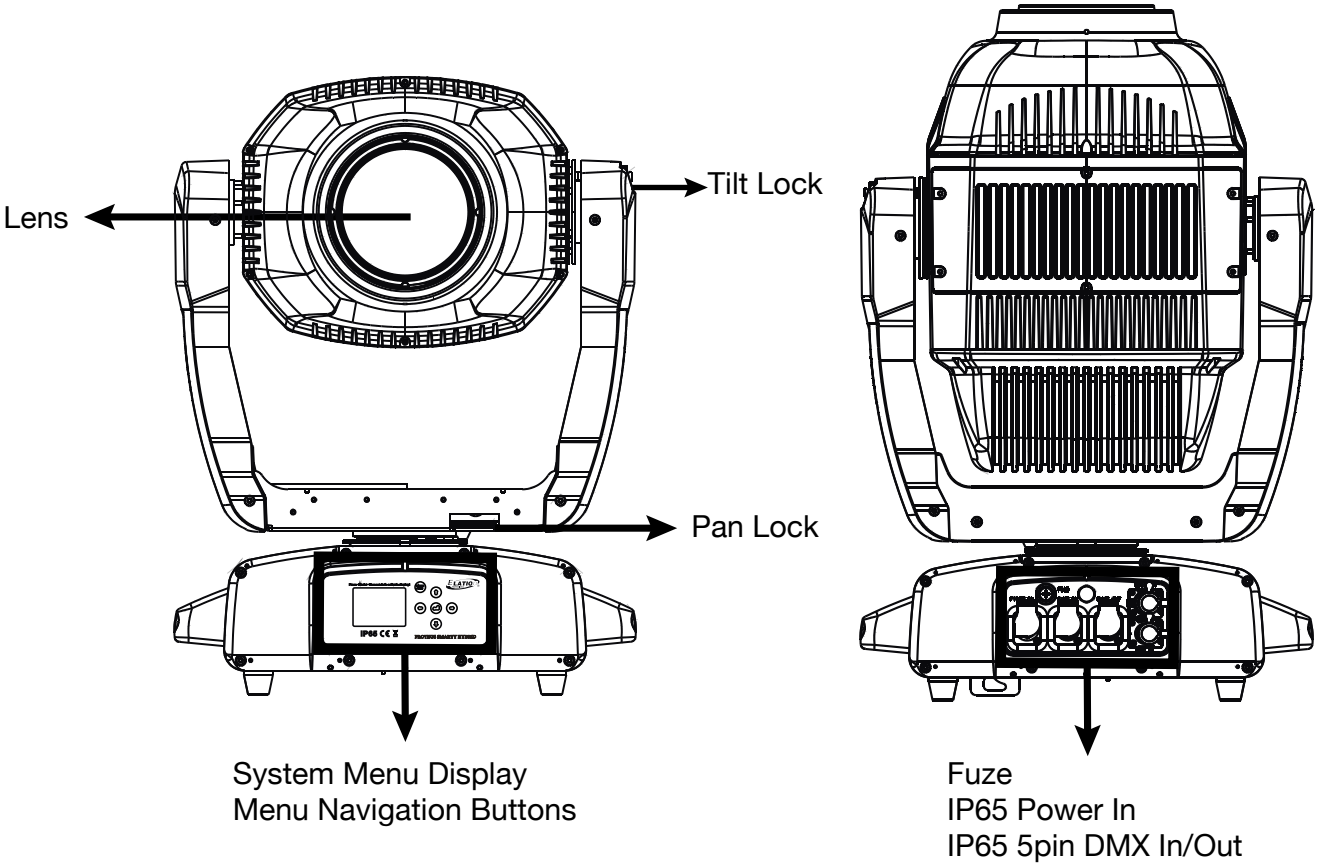

SAFETY CABLE ATTACHMENT

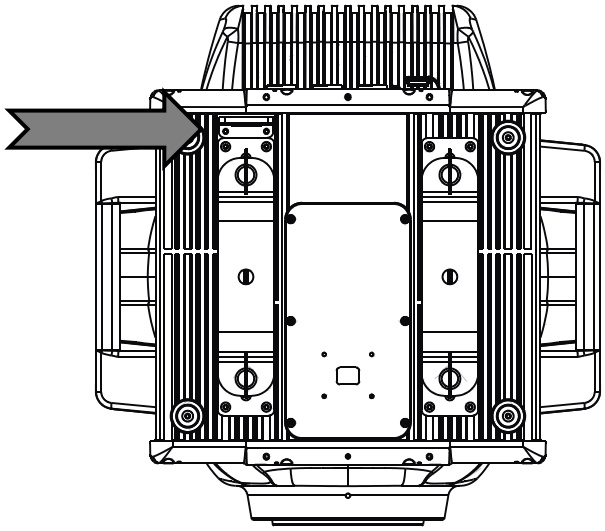

ALWAYS ATTACH A SAFETY CABLE WHENEVER INSTALLING THIS DEVICE IN A SUSPENDED ENVIRONMENT TO ENSURE THE FIXTURE WILL NOT

COLORS, GOBOS, ANIMATION

COLOR WHEEL

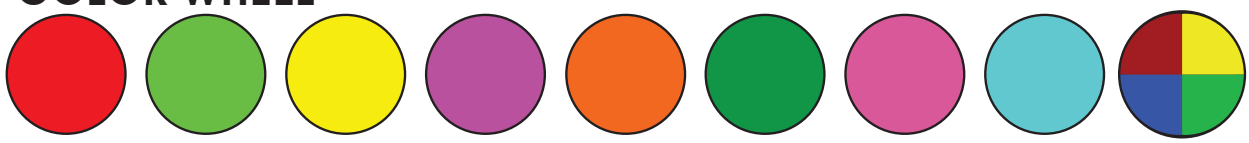

1 Red 2 Green 3 Yellow 4 Magenta 5 Orange 6 Aqua 7 Pink 8 Cyan 9 RYBG

10 CTB 11 UV 12 CTO 13 Blue

COLOR FLAGS

CYAN MAGENTA YELLOW

INTERCHANGEABLE-ROTATING GLASS GOBO WHEEL 1

1 2 3 4 5 6 7 8

STATIC-FIXED METAL GOBO WHEEL 2

1 2 3 4 5 6 7 8 9 10 11 12

CUSTOM GOBOS

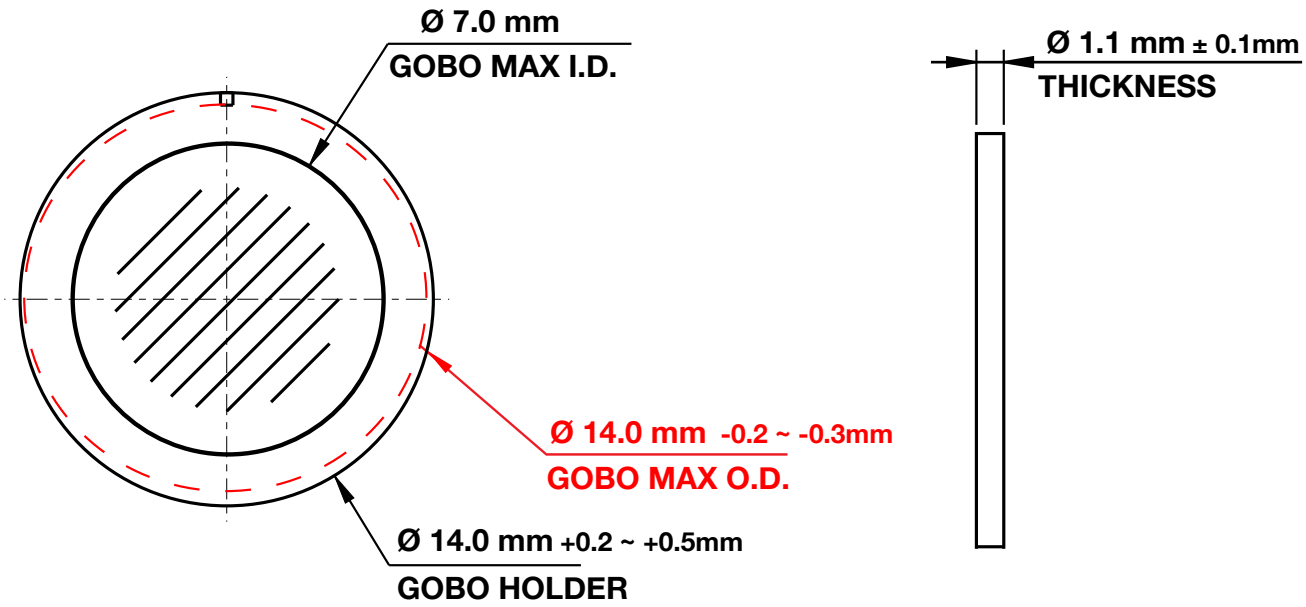

ROTATING GLASS GOBOS - WHEEL 1	
Gobo O.D. (Max. Outer Diameter)	Ø 14mm -0.2~-0.3mm
Gobo I.D. (Max. Image Diameter)	Ø 7mm
Gobo Holder Diameter	Ø 14mm +0.2~+0.5mm
Gobo Thickness	Ø 1.1mm ±0.1mm
Gobo Material	BOROFLOAT

*** * * IMPORTANT NOTICE REGARDING CUSTOM GOBOS * * ***

Due to the high temperature optical system, special material as listed above is required for custom gobos. Due to varying manufacturing processes and tolerances, it is highly recommended to provide a gobo sample and holder from the fixture to the custom gobo vendor for accurate sizing. Extended testing of custom gobo designs is highly recommended prior to use. Contact ELATION SERVICE for further information.

ELATION SERVICE USA - Monday - Friday 8:00am to 5:00pm PST
Voice: 323-582-3322 **Fax: 323-832-9142**
E-mail: support@elationlighting.com

ELATION SERVICE EUROPE - Monday - Friday 08:30 to 17:00 CET
Voice: +31 45 546 85 30 **Fax: +31 45 546 85 96**
E-mail: support@elationlighting.eu

GOBO INSTALLATION

WARNING! GOBO REPLACEMENT SHOULD ONLY BE DONE BE A TRAINED TECHNICIAN.

1. Turn OFF power and allow approximately 60 minutes for the fixture to cool down.

2. Before removing panels, place fixture on a stable flat surface in an **INDOOR DUST FREE** location. Ensure moving head is locked into place into a neutral upright position, with both **PAN** and **TILT** locks engaged.

3. Remove front and back panels; each are secured with (6x) 3mm hex-head screws.

GOBO INSTALLATION

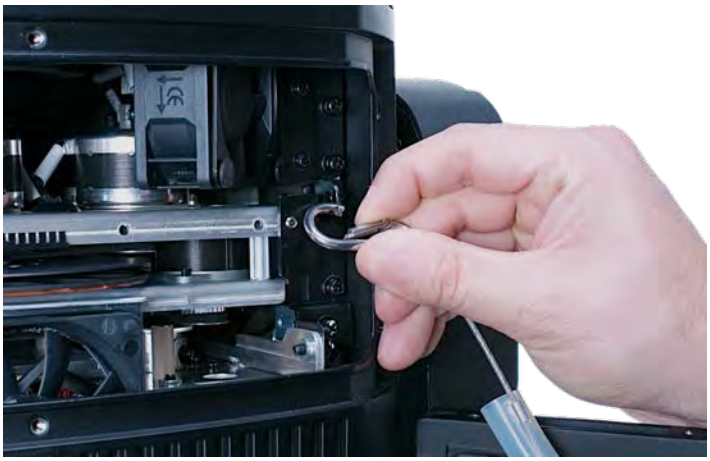

4. One at a time, gently life panels away and unclip the safety cable to remove them completely from the fixture.

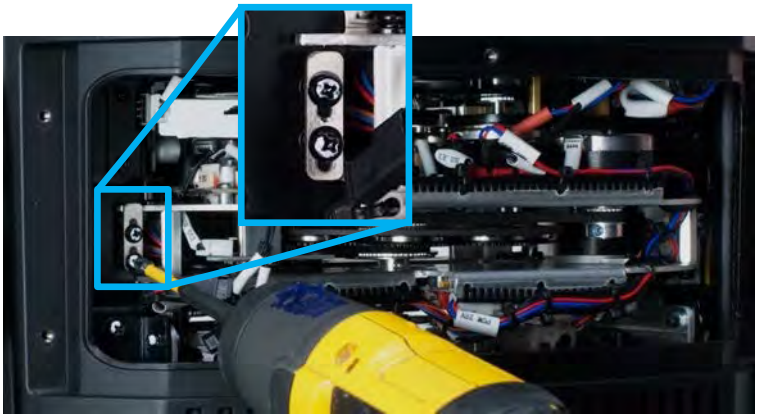

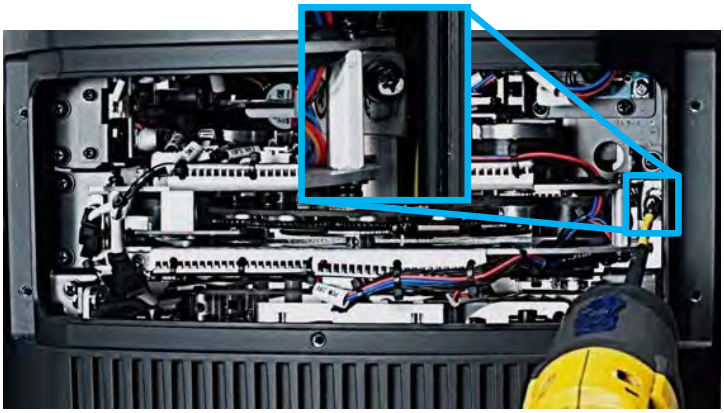

5. Loosen (3x) Phillips head screws securing the GOBO Wheel Module brackets, allowing them to slide freely.

GOBO INSTALLATION

6. Before removing the GOBO Wheel Module, locate the 4 wire connectors and carefully unplug them. (See connectors in photos 6a, 6b, 6c, and 6d) **DO NOT USE FORCE TO REMOVE!**

6a

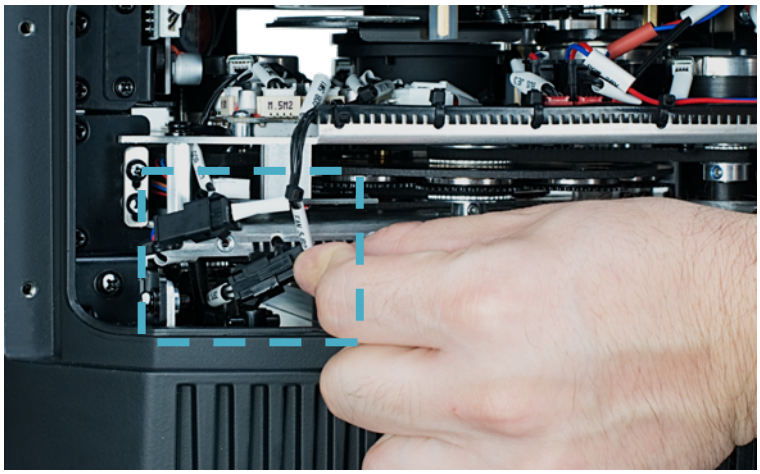

6b

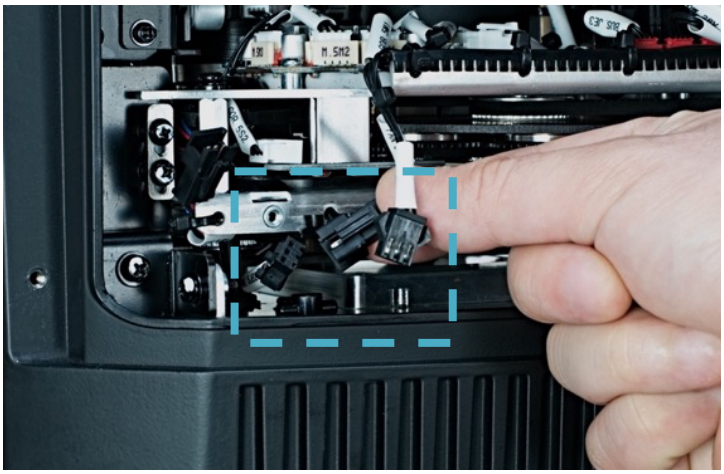

6c

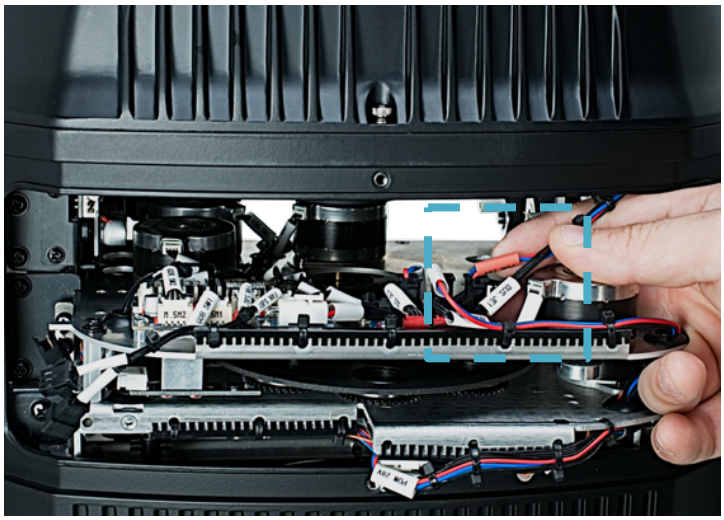

6d

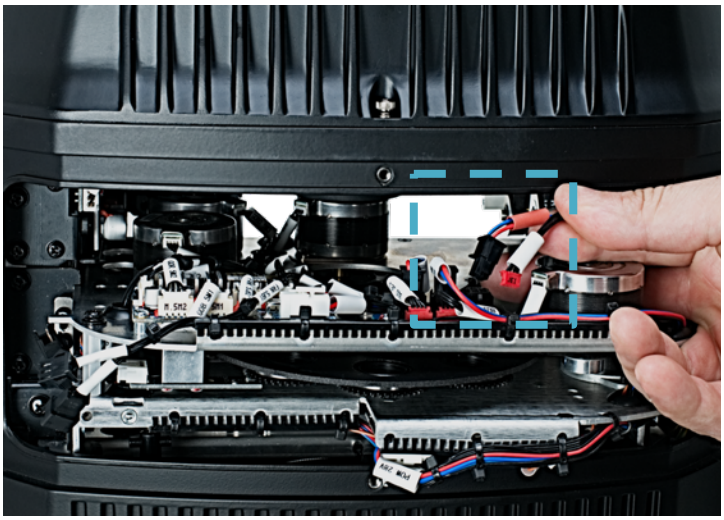

GOBO INSTALLATION

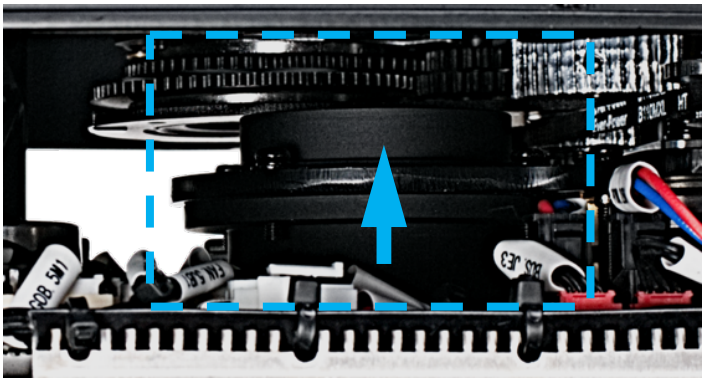

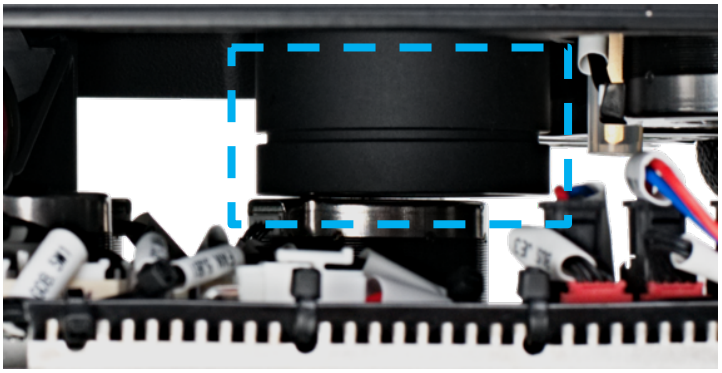

7. Lift/Push the Lens to clear GOBO Wheel Module. If it is difficult to access the Lens, it may be necessary to tilt the head over, allowing gravity to slide the Lens out of the way.

8. Carefully grip the GOBO Wheel Module and slide it out and away to clear the mounting rails.

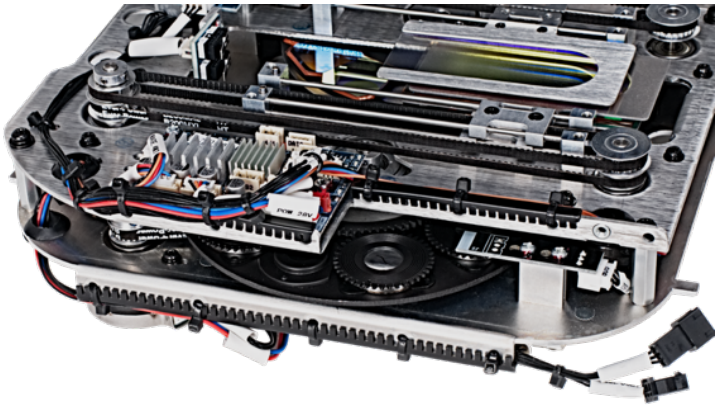

9. Carefully place the GOBO Wheel Module on a stable flat surface in an **INDOOR DUST FREE** location.

GOBO INSTALLATION

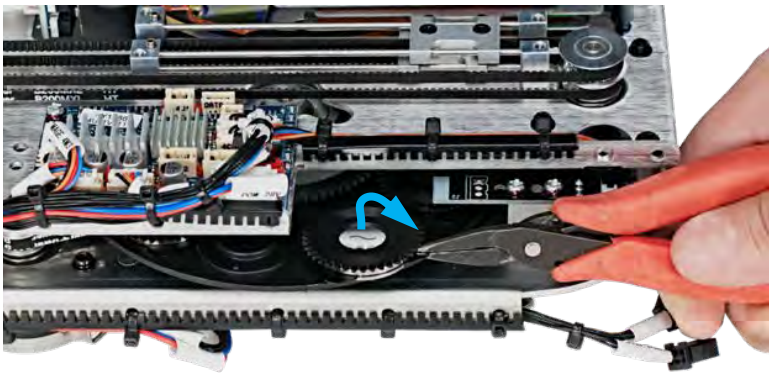

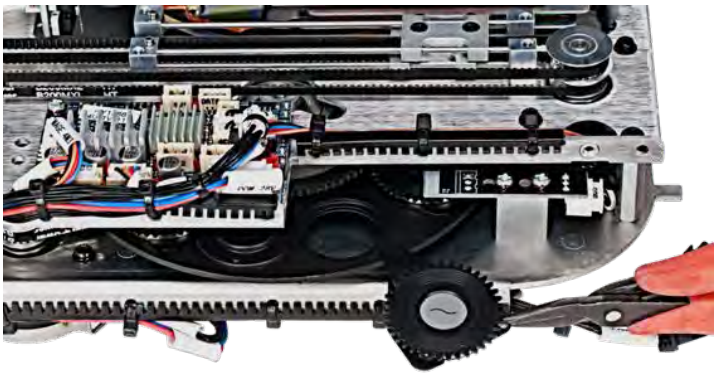

10. **REPLACING A ROTATING GOBO**
Carefully lift the GOBO Holder up and out from the GOBO Wheel using small needle nose plyers.
Take care not to scratch the GOBO and GOBO Holder when removing it from the GOBO Wheel Module.

11. Locate the tab of the retaining spring. Using a precision pick (or similar tool), carefully press the retaining spring inward to relieve the tension. Remove the retaining spring and carefully separate the GOBO from the GOBO Holder. Install the replacement GOBO following the steps above in reverse order.

CAUTION: TAKE CARE NOT TO SCRATCH GOBO OR GOBO HOLDER

GOBO INSTALLATION

GASKET INSPECTION

CAREFULLY REMOVE ANY DEBRIS FOUND ON GASKET AND SCREW HOLES OF BOTH CENTER PANELS USING A NONABRASIVE BRUSH BEFORE INSTALLING!

CAREFULLY INSPECT GASKETS FOR SIGNS OF WEAR SUCH AS CRACKING OR HARDENING, DEFORMITIES, OR ALIGNMENT ISSUES BEFORE INSTALLING!

ITEMS ABOVE CAN IMPEDE THE IP65 INTEGRITY AND/OR CAUSE INTERNAL DAMAGE. CONTACT ELATION SERVICE REGARDING GASKET REPLACEMENT IF NEEDED.

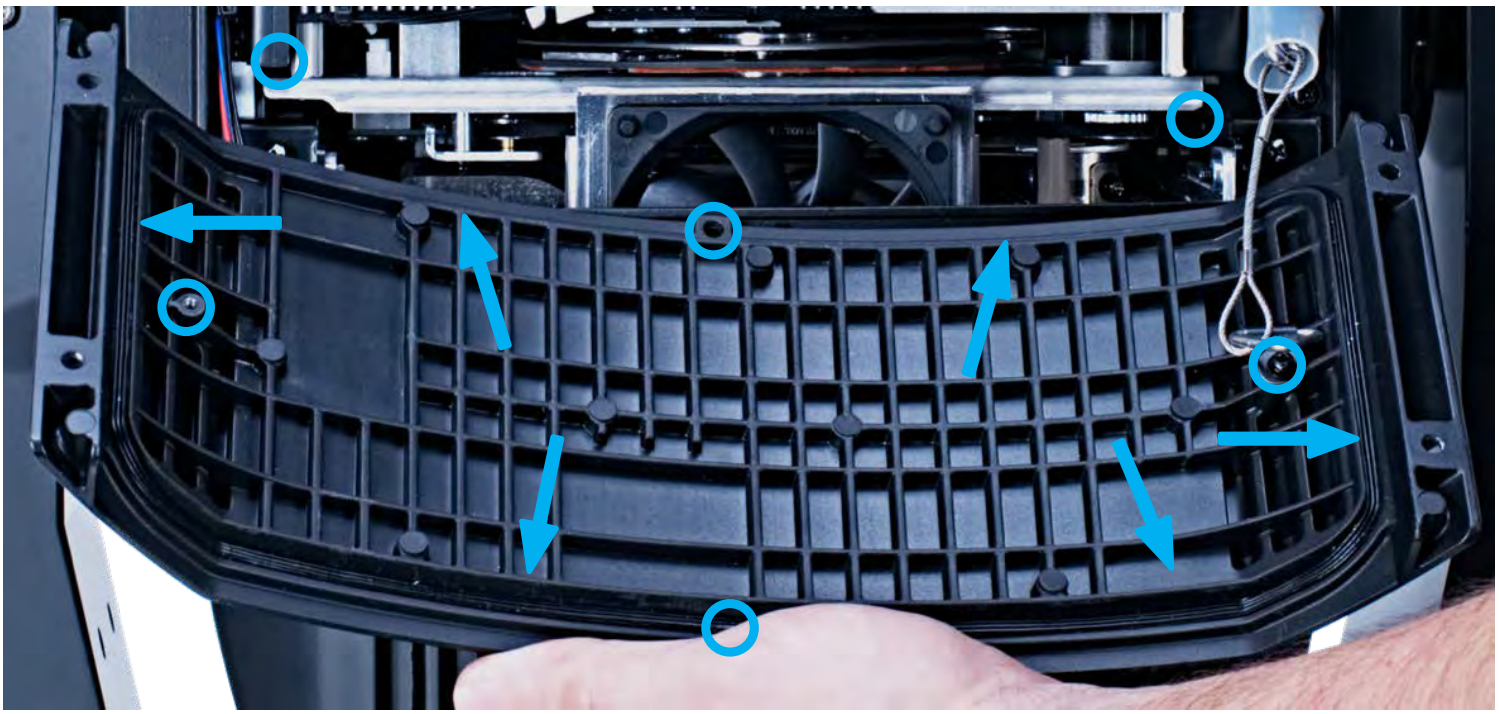

GOBO INSTALLATION

TORQUE SETTINGS FOR PANEL SCREWS

PANEL SCREWS MUST BE TIGHTED WITH A TORQUE WRENCH!

The (12x) hex-head screws holding the panels MUST be tightened with a torque wrench (not included).

TORQUE SETTING = 11 lbf-in. (12.7kgf-cm) *

*** lbf-in = Pound Force Inches | kgf-cm = Kilogram Force Centimeters**

CAUTION! DO NOT OVER TORQUE SCREWS AS THIS CAN CAUSE LEAKAGE ISSUES! TO CONFIRM THE IP65 INTEGRITY AFTER A GOBO REPLACEMENT, TEST FIXTURE USING THE ELATION IP TESTER. CONTACT ELATION SERVICE FOR MORE DETAILS.

LAMP REPLACEMENT

To ensure a proper/safe lamp change, carefully read all the following instructions.

USE ONLY GENUINE ORIGINAL PHILIPS™ LAMPS. OTHER BRAND LAMPS WILL CAUSE DAMAGE AND WILL VOID FIXTURE WARRANTY!

DISCONNECT THE MAIN POWER SUPPLY BEFORE REPLACING LAMP!
FIXTURE MUST COOL FOR 60 MINUTES BEFORE REPLACING LAMP!

NEVER TOUCH LAMP WITH BARE HANDS, ALWAYS WEAR GLOVES!
OIL FROM HANDS WILL SHORTEN LIFE OF LAMP!

MAKE SURE ALL COVERS/PANELS ARE REPLACED/SECURED BEFORE OPERATING FIXTURE TO PREVENT ANY RISK AND/OR DAMAGE TO EYE RETINA FROM UV RADIATION EXPOSIURE!

LAMP PROTECTION CIRCUITRY

The fixture LCD Menu Control Display will indicate the lamp life and related lamp warnings with each power ON, each lamp strike, and when specific lamp hours are reached. The table below provides details on each lamp life warning. Due to the extreme heat associated with the lamp and the nature of the internal optical system, it is **IMPERATIVE** the lamp is replaced when the LCD Menu Control Display indicates replacement is needed. This is done to protect the internal optical system as well as prevent accidental lamp explosion, which could lead to hot glass particles falling from the fixture.

Total Lamp Hours = X – 20% LCD display will slowly blink with a YELLOW outline and the following warning for 10 mins: **“LAMP LIFE left “X” hours. Please change lamp soon**” Sending a DMX value of 250-251 in Channel 24 (Standard Mode) or Channel 34 (Extended Mode) from the lighting controller or pressing the OK button on the fixture control panel will clear this warning.
Total Lamp Hours = X up to X + 20% LCD display will slowly blink with a RED outline and the following warning for 10 mins: **“LAMP LIFE exceeded by “X” hours. Please change lamp immediately”** Sending a DMX value of 250-251 in Channel 24 (Standard Mode) or Channel 34 (Extended Mode) from the lighting controller or pressing the OK button on the fixture control panel will clear this warning.
Total Lamp Hours = X + 20% and higher LCD display will slowly blink RED Outline and the following warning: **“Lamp Life “X” hours. Danger of lamp explosion and permanent fixture damage. Replace lamp immediately! User assumes all risks”** This error can ONLY be cleared when the lamp hours are reset.

LAMP REPLACEMENT

LAMP LIFE OF PHILIPS PLATINUM 200 FLEX = UP TO 6,000 HOURS

Lamp hours are calculated in real time by a smart algorithm combining periods of full output and periods of hibernation with the shutter closed. To reach 6,000 hours the fixture must be operated in average entertainment usage patterns that contain cycles of closed shutters to enter hibernation mode. On average this will allow to the fixture to reach 6,000 hours under common entertainment operation cycles as defined by Philips as 30% operation, 70% hibernation. In the rare case that the fixture Smarty would be turned on, shutter opened and never closed again the lamp life is 2000 hours. Lamp life idle, total time and an estimated total lamp life % are provided in the display of the fixture.

WARNING! LAMP REPLACEMENT SHOULD ONLY BE DONE BE A TRAINED TECHNICIAN.

1. Turn OFF power and allow approximately 60 minutes for the fixture to cool down.

2. Place head in a 90-degree horizontal position.

Engage **PAN and TILT** locks for added stability while replacing the lamp.

LAMP INSTALLATION

3. Remove (4x) 3mm hex-head screws to remove the rear cover.

4. Unclip the rear panel safety cable.

5. Locate 2 wire connectors to the heatsink module.

6. Carefully unplug these two wire connectors.
It may be necessary to use a precision pick or similar tool to gently unlock each connector.

DO NOT USE FORCE TO REMOVE!

LAMP INSTALLATION

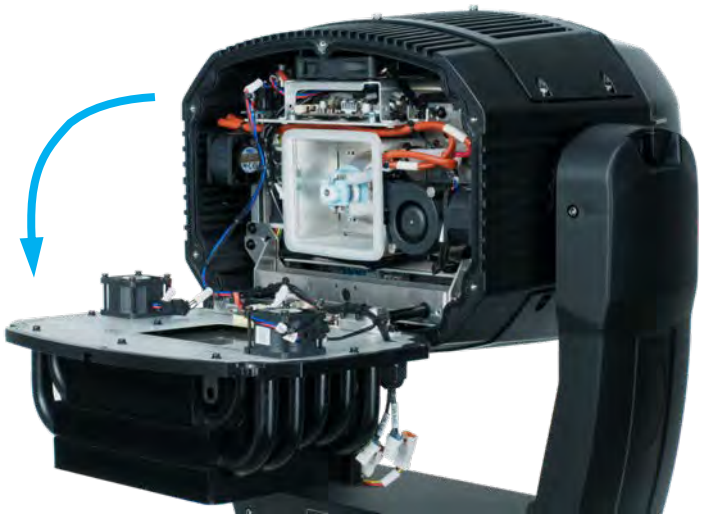

7. Remove (4x) 3mm hex-head screws holding the heatsink module.

Carefully rotate heatsink module down 90° to rest on brackets. **DO NOT USE FORCE!**

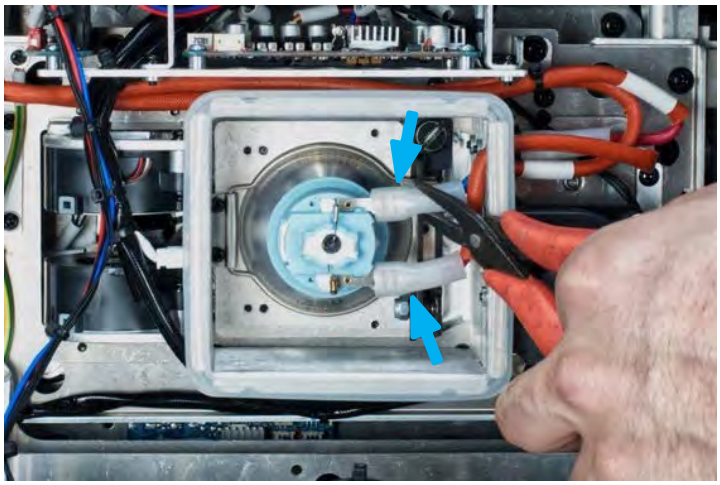

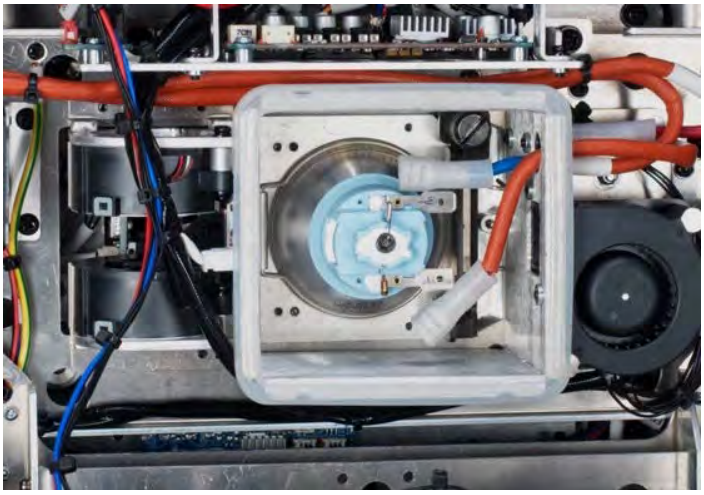

8. Gently remove the (2x) spade terminals connected to the lamp base.

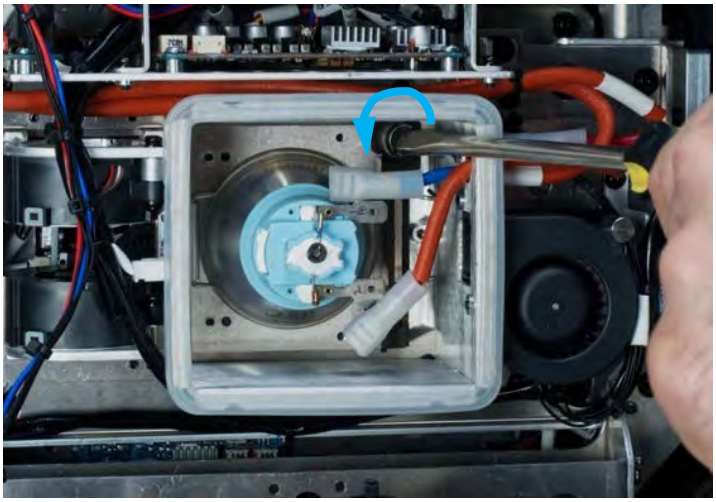

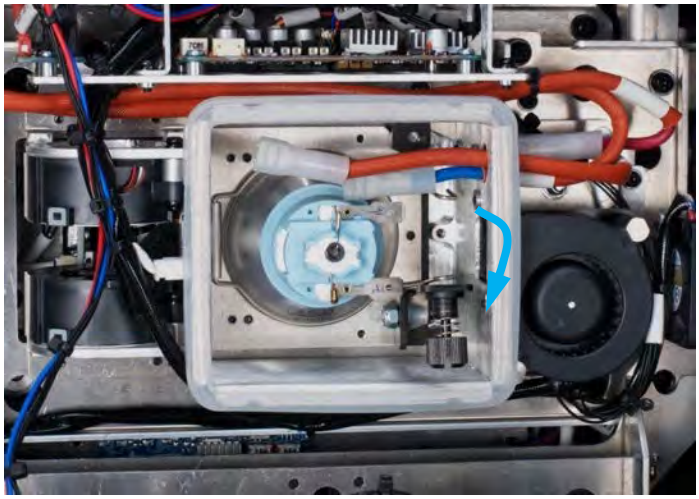

9. Loosen the lamp retaining arm screw and the pull arm out, then unclip the lamp retaining-clip.

LAMP INSTALLATION

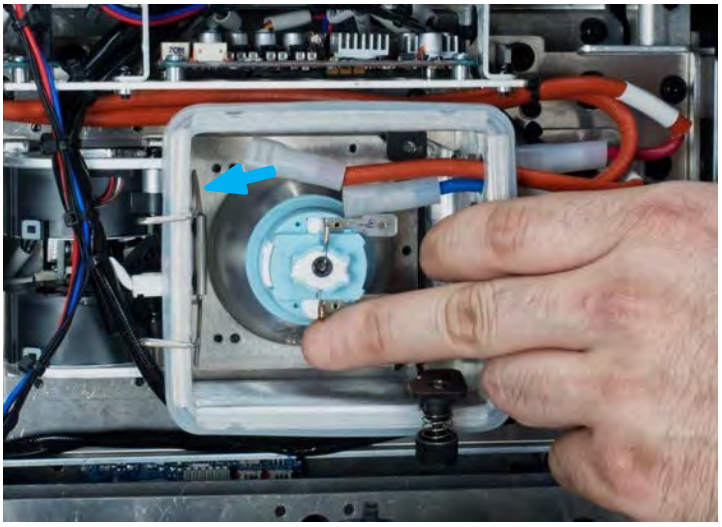

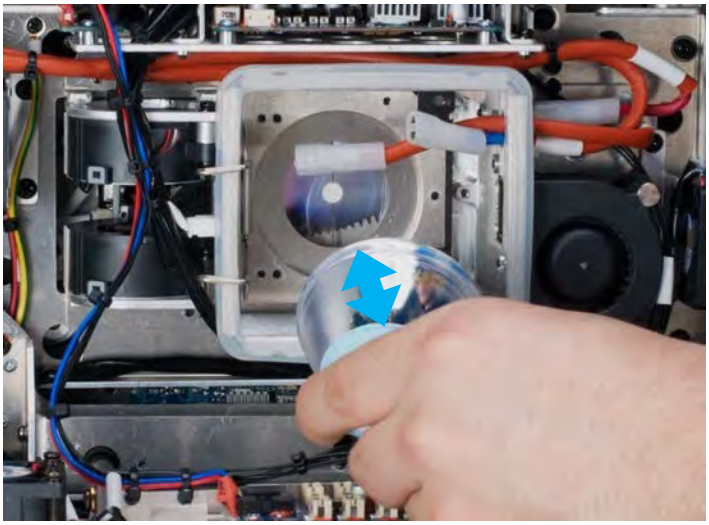

10. Swing the lamp retaining clip out, then carefully remove the lamp.

WARNING! LAMP MAY BE HOT. USE CAUTION WHEN TOUCHING LAMP WITH BARE HANDS.

GASKET INSPECTION

CAREFULLY REMOVE ANY DEBRIS FOUND ON GASKET AND SCREW HOLES OF THE HEATSINK MODULE USING A NONABRASIVE BRUSH BEFORE INSTALLING!

CAREFULLY INSPECT HEATSINK GASKET FOR SIGNS OF WEAR SUCH AS CRACKING OR HARDENING, DEFORMITIES, OR ALIGNMENT ISSUES BEFORE INSTALLING!

ITEMS ABOVE CAN IMPEDE THE IP65 INTEGRITY AND/OR CAUSE INTERNAL DAMAGE. CONTACT ELATION SERVICE REGARDING GASKET REPLACEMENT IF NEEDED.

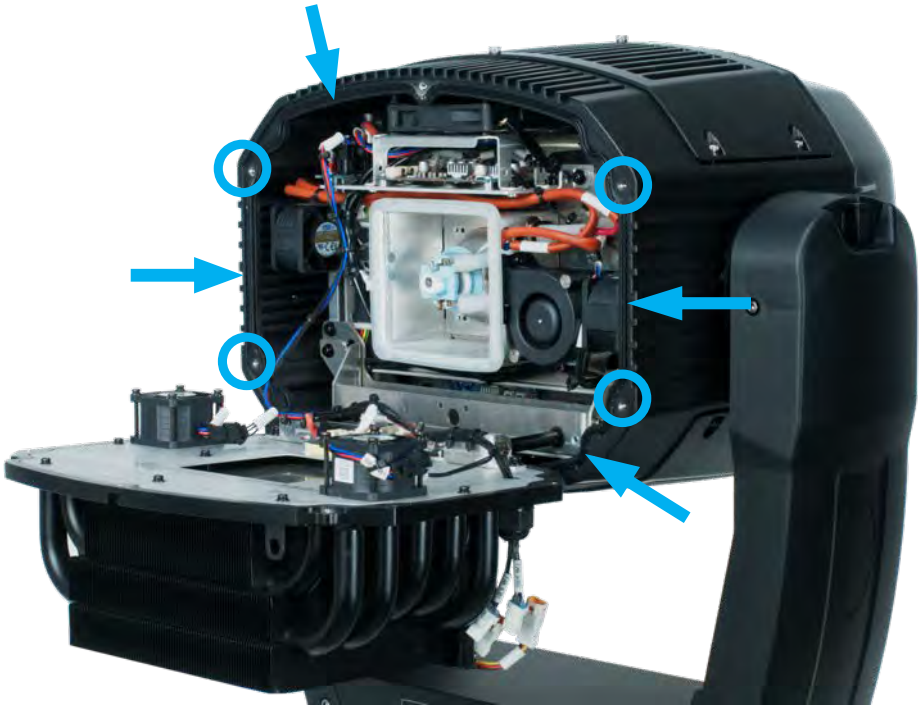

LAMP INSTALLATION [continued]

TORQUE SETTINGS FOR SCREWS

HEATSINK MODULE SCREWS MUST BE TIGHTENED WITH A TORQUE WRENCH.

The (4x) hex-head screws holding the heatsink module MUST be tightened with a torque wrench (not included). TORQUE SETTING = 11 lbf-in. (12.7kgf-cm) *

*** lbf-in = Pound Force Inches | kgf-cm = Kilogram Force Centimeters**

CAUTION! DO NOT OVER TORQUE SCREWS AS THIS CAN CAUSE LEAKAGE ISSUES! TO CONFIRM THE IP65 INTEGRITY AFTER A LAMP REPLACEMENT, TEST FIXTURE USING THE ELATION IP TESTER. CONTACT ELATION SERVICE FOR MORE DETAILS.

FIXTURE INSTALLATION

FLAMMABLE MATERIAL WARNING

Keep fixture minimum 5.0 feet (1.5m) away from flammable materials and/or pyrotechnics.

ELECTRICAL CONNECTIONS

A qualified electrician should be used for all electrical connections and/or installations.

USE CAUTION WHEN POWER LINKING OTHER MODEL FIXTURES AS THE POWER CONSUMPTION OF OTHER MODEL FIXTURES MAY EXCEED THE MAX POWER OUTPUT ON THIS FIXTURE. CHECK SILK SCREEN FOR AMX AMPS.

MINIMUM DISTANCE TO OBJECTS/SURFACES MUST BE 49.2 FEET (15 METERS)

MINIMUM DISTANCE OF INFLAMMABLE MATERIALS FROM THE SURFACE 1.6 FEET (0.5 METER)

MAXIMUM TEMPERATURE OF EXTERNAL SURFACE 185° F (85°C)

DO NOT INSTALL THE FIXTURE IF YOU ARE NOT QUALIFIED TO DO SO!

Fixture **MUST** be installed following all local, national, and country commercial electrical and construction codes and regulations.

Before rigging/mounting a single fixture or multiple fixtures to any metal truss/structure or placing the fixture(s) on any surface, a professional equipment installer **MUST** be consulted to determine if the metal truss/structure or surface is properly certified to safely hold the combined weight of the fixture(s), clamps, cables, and accessories.

Overhead rigging requires extensive experience, including amongst others calculating working load limits, installation material being used, and periodic safety inspection of all installation material and the fixture. If you lack these qualifications, do not attempt the installation yourself. Improper installation can result in bodily injury.

Fixture ambient operating temperature range is **14° to 113°F. (-10° to 45°C)**
Do not use the fixture under or above this temperature.

Fixture(s) should be installed in areas outside walking paths, seating areas, or away from areas were unauthorized personnel might reach the fixture by hand.

NEVER stand directly below the fixture(s) when rigging, removing or servicing.
Overhead fixture installation must always be secured with a secondary safety attachment, such as an appropriately rated safety cable.

Allow approximately 15 minutes for the fixture to cool down before serving.

FIXTURE INSTALLATION

OMEGA BRACKETS INSTALLATION

Insert the Omega Brackets into the matching holes on the bottom of the fixture. Secure the Omega Brackets to the fixture by turning each quick-lock fastener ¼ turn clockwise; making sure the fastener is completely locked. Omega Brackets can be installed into the fixture base as illustrated below.

CLAMP INSTALLATION

When mounting fixture to truss, be sure to secure an appropriately rated professional grade rigging clamp to the included **Omega Brackets** using an M10 screw fitted through the center hole of the **Omega Brackets**. The fixture provides a built-in rigging points for a **SAFETY CABLE**. Be sure to only use one of the designated rigging points for the safety cable and never secure a safety cable to a carrying handle.

RIGGING

Overhead rigging requires extensive experience, including amongst others calculating working load limits, installation material being used, and periodic safety inspection of all installation material and the fixture. If you lack these qualifications, do not attempt the installation yourself. Improper installation can result in bodily injury.

ALWAYS ATTACH AN APPROPRIATELY RATED SAFETY CABLE (NOT INCLUDED) THAT MEETS ALL LOCAL, NATIONAL, AND COUNTRY CODES AND REGULATIONS WHENEVER INSTALLING FIXTURE IN A SUSPENDED ENVIRONMENT!

ART-NET | sACN CONNECTION

When connecting fixture to a network switch to control multiple devices, a **Gigabit Ethernet Switch** that supports **IGMP (Internet Group Management Protocol)** is required. Using a **Gigabit Ethernet Switch** that does not support **IGMP** can cause erratic behavior of all connected devices to the switch. Click link below for more information about IGMP.
https://en.wikipedia.org/wiki/Internet_Group_Management_Protocol

FIXTURE INSTALLATION

POWER AND DATA CABLES

TO MAINTAIN THE IP65 RATING INTEGRITY OF THE FIXTURE, ALL CABLES MUST BE RUN TOWARDS THE GROUND TO PREVENT WATER ACCUMULATION AROUND THE CONNECTIONS. (see illustration below)

CONTROL PANEL LCD DISPLAY

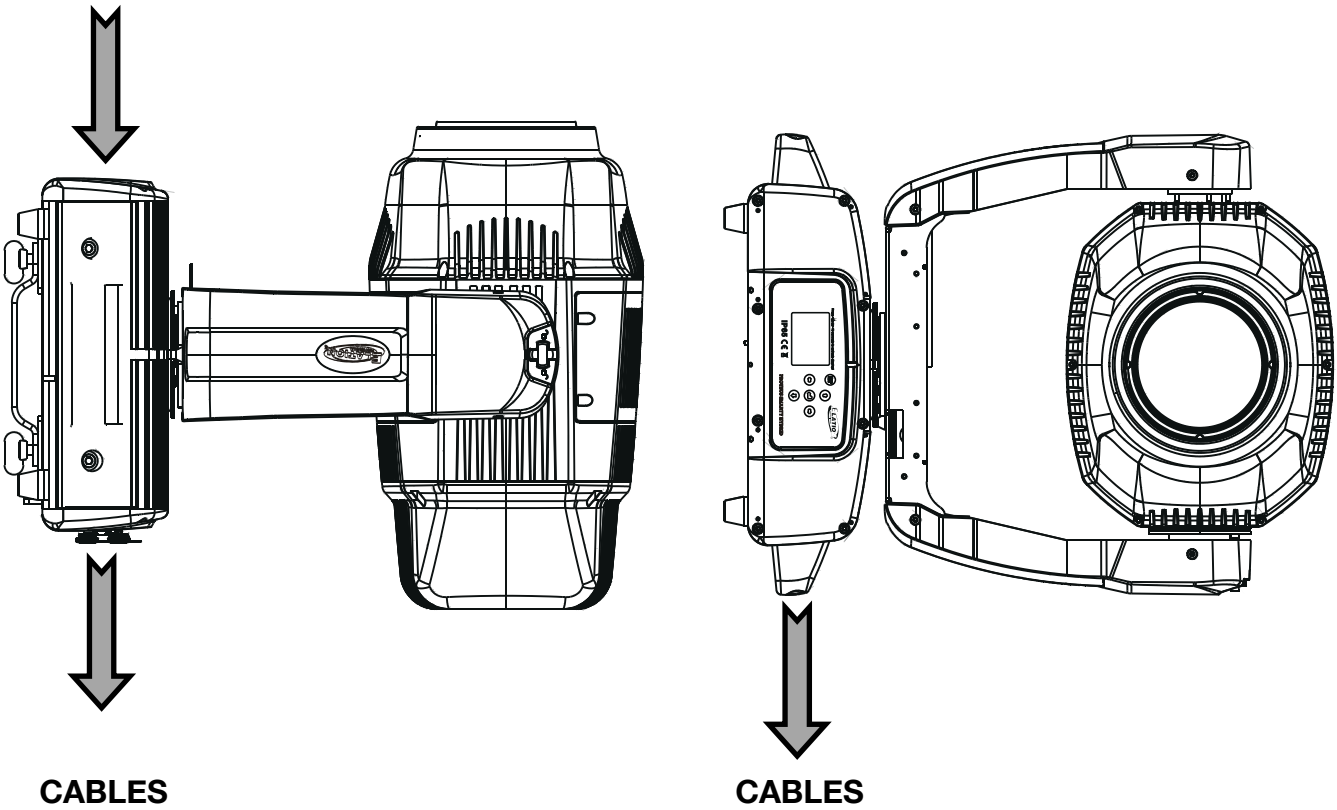

FIXTURE INSTALLATION

POWER AND DATA CONNECTIONS

ENSURE ALL CONNECTIONS AND END CAPS ARE PROPERLY SEALED WITH A DIELECTRIC GREASE (AVAILABLE AT MOST ELECTRICAL SUPPLIERS) TO PREVENT WATER CORROSION AND/OR ELECTRICAL SHORT CIRCUIT.

TO MAINTAIN IP65 RATING INTEGRITY AND PREVENT WATER FROM ENTERING THE FIXTURE, SEAL ALL UNUSED CONNECTION RUBBER CAPS.

SAFETY CABLE RIGGING POINT

ALWAYS ATTACH A SAFETY CABLE WHENEVER INSTALLING THIS DEVICE IN A SUSPENDED ENVIRONMENT TO ENSURE THE FIXTURE WILL NOT DROP IF THE CLAMP FAILS.

INSTALLATION GUIDELINES

RIGGING

Overhead rigging requires extensive experience, including calculating working load limits, knowledge of installation material being used, and periodic safety inspection of all installation material and the fixture itself, among other skills. If you lack these qualifications, do not attempt installation of the fixture on your own. Improper installation can result in bodily injury. The fixture is fully operational in the specific mounting positions illustrated below:

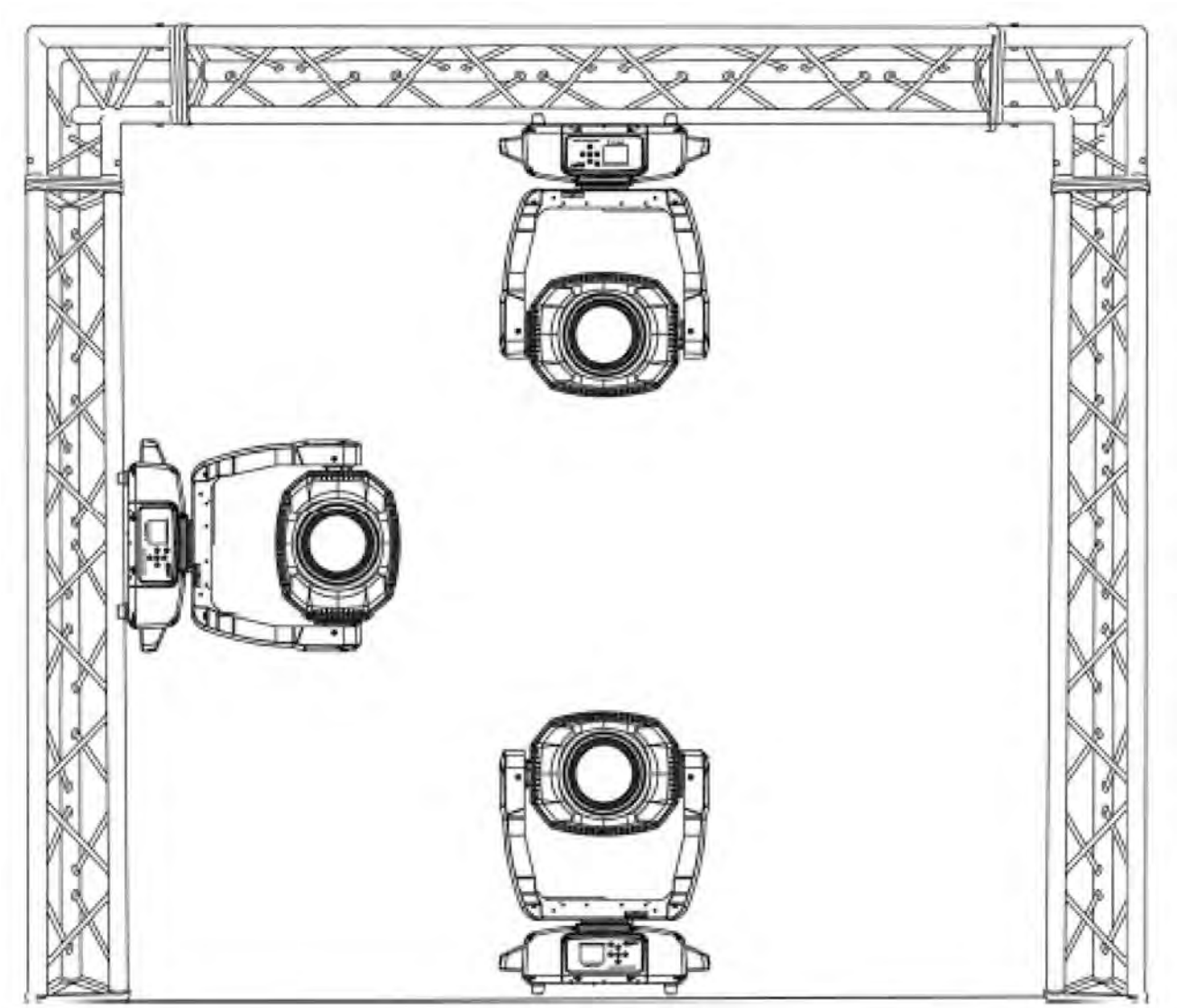

INSTALLATION GUIDELINES

POTENTIAL INTERNAL FIXTURE DAMAGE FROM EXTERNAL SOURCES OF LIGHT BEAMS

External sources of light beams from direct sunlight, lighting moving head fixtures, and lasers, which are focused directly on the exterior housing and/or penetrate the front lens opening of ELATION lighting fixtures, can cause severe internal damage including burning to optics, dichroic color filters, glass and metal gobos, prisms, animation wheels, frost filters, iris, shutters, motors, belts, wiring, discharge lamps, and LEDs.

This issue is not specific only to ELATION lighting fixtures, it is a common issue with lighting fixtures from all manufacturers. Although there is no true way to fully prevent this issue from happening, the guidelines below can prevent any potential damage from occurring if followed. Contact ELATION Service for more details.

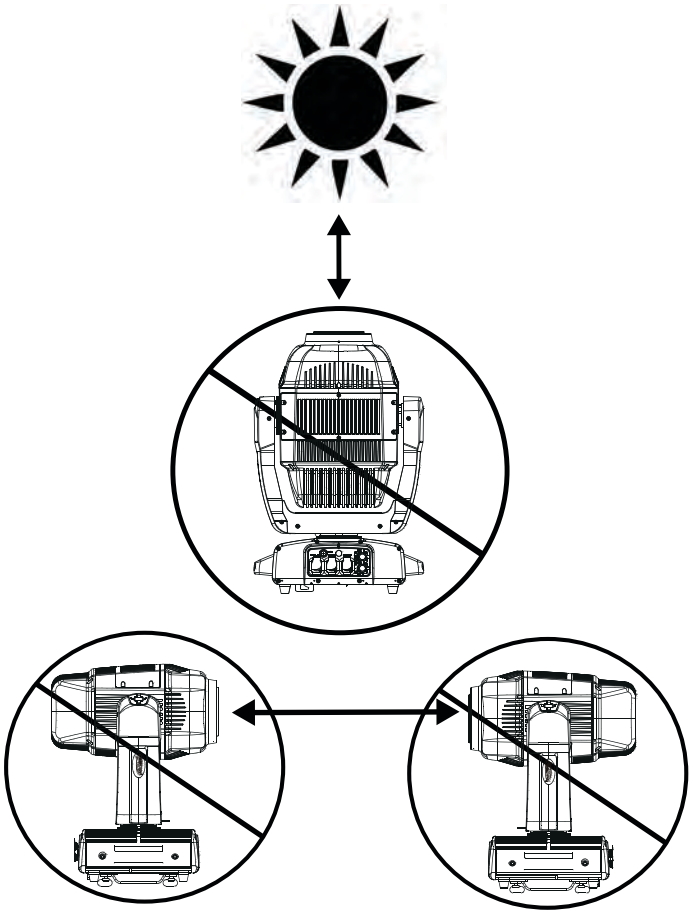

DO NOT EXPOSE THE FIXTURE AND/OR FRONT LENS OPENING TO LIGHT BEAMS FROM DIRECT SUNLIGHT, OTHER LIGHTING MOVING HEAD FIXTURES, AND LASERS WHILE UNPACKING, INSTALLATION, USE, AND EXTENDED IDLE TIMES OUTDOORS. DO NOT FOCUS A LIGHT BEAM FROM ONE LIGHTING FIXTURE DIRECTLY TOWARDS ANOTHER.

SUN PROTECTION MODE / HIBERNATION MODE

This state can be set via DMX, or will go into this state after 3 minutes without a DMX signal.

When the sun protection is activated, the pan-and-tilt function of the moving-head will position the lens away from direct sunlight, or other high intensity light source, to protect the internal belts, electronics etc. from burn damage.

When the unit is in the ‘sun protection state’, it uses its accelerometer sensors (X-Y-Z) (only present on discharge units and IP units) to position the front lens downwards, even when the unit(s) will be moved from its position. This will keep on changing the position of the head.

Note that ‘manual mode’ overrides the ‘sun-protection mode’.
The hibernation function is an incredibly old feature that puts the unit into a ‘sleep state’ to save power (this is a state whereas only the electronics remain on, and all other functions are turned off, functions such as motors lamps etc.). This state is automatically activated when no DMX signal is present for the set time (1-99min or off).

SYSTEM MENU

The fixture includes an easy to navigate system menu. The control panel (see image below) located on the front of the fixture, provides access to the main system menu and is where all necessary system adjustments are made to the fixture. During normal operation, pressing **MODE/ESC** button once will access the fixture's main menu. Once in the main menu you can navigate through the different functions and access the sub-menus with the **UP, DOWN, RIGHT,** and **LEFT** buttons. Once you reach a field that requires adjusting, press the **ENTER** button to activate that field and use the **UP** and **DOWN** buttons to adjust the field. Pressing the **ENTER** button once more will confirm your setting. You may exit the main menu at any time without making any adjustments by pressing the **MODE/ESC** button.

To access the LCD Menu Control Display via the internal battery, press and hold the **MODE/ESC** button for 10 seconds. The LCD Menu Control Display will shut **OFF** automatically about 1 minute from the last button press.

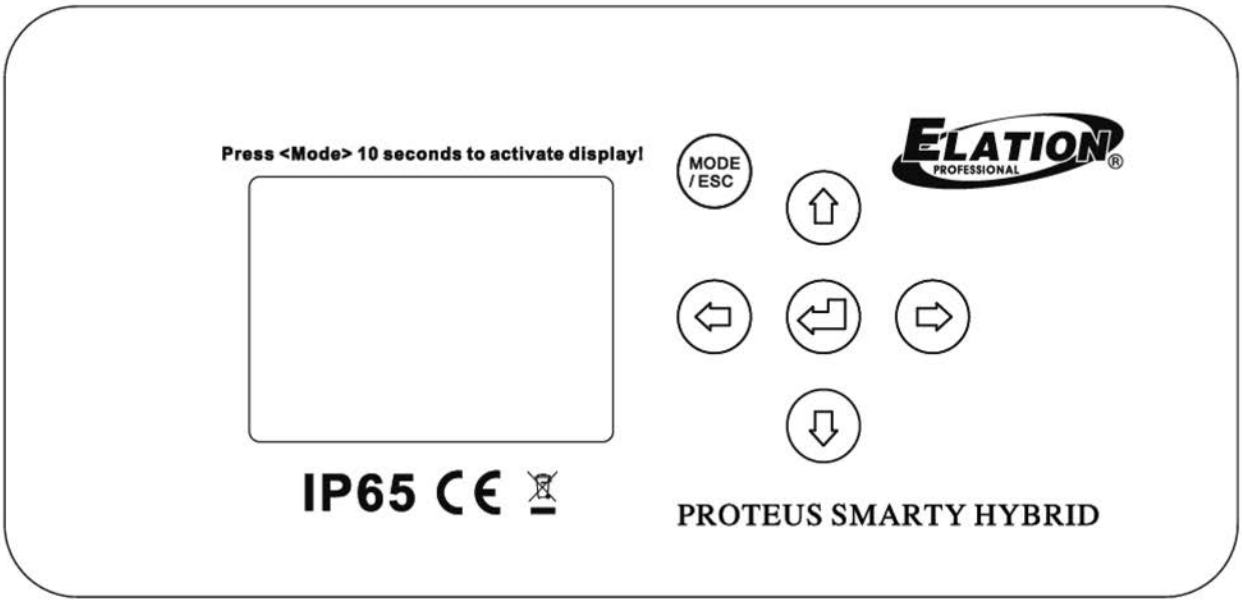

ELATION PROTEUS SMARTY HYBRID SYSTEM MENU - Supports Software Versions: ≥ 1.1.3				
Features are subject to change without notice. *Rotation direction (Clockwise or Counterclockwise) of effects depends on orientation of the fixture head and Pan/Tilt settings.				
MAIN MENU	**SUB MENU**	**OPTIONS / VALUES** (Default Settings in **BOLD**)		**DESCRIPTION**
FUNCTION	Set Dmx Address	A001~AXXX		DMX Address Setting
	Dmx Value	ALL……		DMX Value Display
	Secondary Mode	Secondary1, Secondary2, Secondary3		Secondary Setting
	Auto Program	Primary / **Alone**		Auto Program
INFORMATION	Time Information	Current Time	xxxx(Hours)	Fixture Run Time From Power ON
		Total Run Time	xxxx (Hours)	Fixture Total Run Time
		Last Run Time	xxxx (Hours)	Fixture Last Run Time
		Lamp Time Info	Total Time xxxx (Hours)	Total Lamp Time Usage
			Active Time xxxx (Hours)	Active Lamp Time Usage
			Idle Time xxxx (Hours)	Idle Lamp Time
			Lamp Life (% Percent)	Lamp Life
		Lamp Off Time	xxxx (Hours)	Lamp OFF Time
		LastRun Password	Password=**038**	**(PSWD Required)**
		Clear Last Run	ON / **OFF**	Clear Fixture Last Run Time
		LampTimePassword	Password=**038**	**(PSWD Required)**
		Clear Lamp Time	ON / **OFF**	Clear Lamp Run Time
	Temperature Info	Base Temperature	xxx C° / **F °**	Temperature in Fixture Base
		Head Temperature	xxx C° / **F °**	Temperature in Fixture Head
		Lamp Temperature	xxx C° / **F °**	Temperature of Lamp
	Humidity Info	Head Humidity	xx%**RH**	Relative Humidity in Head
		Base Humidty	xx%**RH**	Relative Humidity in Base
	Ethernet IP	xxx . xxx . xxx . xxx	xxx . xxx . xxx . xxx	Displays Fixture Ethernet Address
	Fan Info	xxxx RPM		Speeds of Head/Base Fans
	Encode Info	PAN: xxxx TILT:xxxx		PAN and TILT Encode Info
	Software Version	1U01: - 10U01:	**≥V1.1.3**	Software Version
	Error Info	Error Record 1 ~ Error Record 10		Fixture Last 10 Error Codes
LAMP CONTROL	Lamp On/Off	**ON**/OFF		Lamp ON/OFF
	Automatic On	**ON**/OFF		Lamp ON/OFF when Power ON
	Lamp On via DMX	**ON**/OFF		Lamp ON via DMX
	Lamp Off via DMX	**ON**/OFF		Lamp OFF via DMX
	MaxOnAtHumidity	**070%**. 020% - 100%		Fixture Restart at Humidity %
	Lamp Power Mode	190W, 240W, **280W**		Lamp Power Mode
PERSONALITY	Status Settings	Address via DMX	**ON**/OFF	Address Via DMX
		No DMX Status	Close / **Hold** / Auto	Fixture State When NO DMX Signal
		Pan Reverse	ON/**OFF**	Pan Reverse Movement
		Tilt Reverse	ON/**OFF**	Tilt Reverse Movement
		Pan Degree	630/**540**	Pan Degree Select
		Feedback	**ON**/OFF	Movement Feedback
		Hibernation	OFF, 01M~99M, **15M**	Stand By Mode
	Service Setting	Password	Password=**050**	Service Password
		RDM UID	**22A6xxxxxxxx**	RDM PID Code **(PSWD Required)**
		Clear Err. Info	ON/**OFF**	Clear Error Info **(PSWD Required)**
		DFLT Pow. LampOn	ON/**OFF**	Set Lamp Default Power State to ON
	Display Setting	Shutoff Time	02~60m **05m**	Display Shut Off Time
		Display Reverse	**AUTO**, ON, OFF	Display Reverse 180º
		Key Lock	ON/**OFF**	Key Lock
	Temperature C/F	Celsius/**Fahrenheit**		Temperature Switch Between C°/ F°
	Initial Status	PAN =XXX		Initial Effect Position
	Select Signal	DMX Only, Art-Net, sACN		Activate DMX, Art-Net, or sACN
	Ethernet IP	XXX . XXX . XXX . XXX		Ethernet IP
	Ether Mask IP	XXX . XXX . XXX . XXX		Ethernet Mask IP
	Set Universe	**000** - 32767		Set Art-Net Universe
	Reset Default	ON/**OFF**	Password=**011**	Restore Factory Settings **(PSWD Required)**

ELATION SMARTY HYBRID SYSTEM MENU - Supports Software Versions: ≥ 1.1.3				
Features subject to change without notice. *Rotation direction (Clockwise or Counterclockwise) of effects depends on orientation of the fixture head and Pan/Tilt settings.				
MAIN MENU	**SUB MENU**	**OPTIONS / VALUES** (Default Settings in **BOLD**)		**DESCRIPTION**
Reset Function	Reset All			Reset All Motors
	Reset Pan&Tilt			Reset Pan/Tilt
	Reset Colors			Reset Color Wheel
	Reset Gobos			Reset Gobos
	Reset Shutter			Reset Shutter
	Reset Others			Reset Other Motors
Effect Adjust	Test Channel	PAN ……		Test function
	Manual Control	PAN =XXX, ...		Fine Adjustments
	Calibration	Calibration Password		Password **050 (PSWD Required)**
User Mode Set	User Mode	**Standard Mode**		DMX Channel Modes
		Extended Mode		
	Edit User Mode	Edit User Mode A	Max Channel = XX PAN = CH01	Edits User Defined Channel Assignments
		Edit User Mode B		
		Edit User Mode C		
Edit Program	Select Program	Auto Pro Part1 = Program 1~10 **(Program 1)**		Select Programs To Be Run
		Auto Pro Part2 = Program 1~10 **(Program 2)**		
		Auto Pro Part3 = Program 1~10 **(Program 3)**		
	Edit Program	Program 1	Program Test	Testing Program
		:	Step 01=SCxxx	Program In Loop
		Program 10	Step 64=SCxxx	Save and Exit
	Edit Scenes	Edit Scene 001 ~ Edit Scene 250	Pan,Tilt,……	Save and Automatically Return
			--Fade Time-- --Scene Time--	Manual Scenes Edit
			Input By Outside	Stores Scenes via Ext DMX Console
	Rec. Controller	XX~XX		Automatic Scenes Recorder

SYSTEM MENU

PERSONALITY - Status Settings - Address Via DMX

When ON, define the desired DMX address via an external controller.

NOTE: This process assumes the fixture DMX address is set to 001. If fixture DMX address is not at 001, you must adjust the channel numbers accordingly in order for this feature to work.
For example: if your fixture address is 010, then Channel 1 becomes Channel 10, Channel 2 becomes Channel 11, and Channel 3 becomes Channel 12.

1. Connect the fixture to the external controller and power ON.
2. Set the DMX value of **Channel 1** on the controller to **(7)**.
3. Set the DMX value of **Channel 2** on the controller to **(7)** or **(8)**.
   When set to **(7)**, the DMX address can be set between **(1)** and **(255)**.
   When set to **(8)**, the DMX address can be set between **(256)** and **(511)**.
4. Using **Channel 3** on the controller set the desired DMX address of the fixture.

   Example 1: If the desired DMX address is **57**, set **Channel 1** to a value of **(7)**, set **Channel 2** to a value of **(7)**, and then set **Channel 3** to a value of **(57)**.

   Example 2: If the desired DMX address is **420**, set **Channel 1** to a value of **(7)**, set **Channel 2** to a value of **(8)**, and then set **Channel 3** to a value of **(164)**. (256+164=420)
5. After setting **Channel 3** to the desired DMX address value, wait for approximately 20 seconds (some fixtures may require a longer time) for the fixture to complete the address reset function.

PERSONALITY – Service Setting - Password (050)

The Service Password MUST be entered in order to access the service menus.

SYSTEM MENU

PERSONALITY - Display Setting – Key Lock

When ON, Control Panel buttons lock automatically after exiting main menu for 15 seconds. To unlock, keep **MODE/ESC** button pressed for 3 seconds.

PERSONALITY - Reset Default

ONLY QUALIFIED TECHNICIANS SHOULD PERFORM THIS FUNCTION!

This function restores all fixture settings to the factory default settings. The password is **011** and must be entered each time a reset is performed.

EFFECT ADJUST – Test Channel

Auto test each individual channel function independently from the DMX control board.

EFFECT ADJUST – Manual Control

Select and manually test and fine adjust each individual channel function
Independently from DMX control board. This function will center PAN and TILT motors and set dimmer to 100%. PAN and TILT functions will still operate if the fixture needs to be positioned to a flat clear surface. With the individual functions, you can focus the light on a flat surface (wall) and perform fine adjustments.

EFFECT ADJUST – Calibration

ONLY QUALIFIED TECHNICIANS SHOULD PERFORM THIS FUNCTION!

This function allows small adjustments to be made to the Pan, Tilt, and Zoom movements to compensate for ware or in the event a sensor has been knocked slightly out of place. Because improper use of this function can result in undesired operation this function has been password protected. The password is **050** and must be entered each time the calibration menu function is entered. Because calibration is an extremely delicate procedure, instructions on performing this action are left out of this manual. For a first-time calibrator, please contact our customer support team for step-by-step instructions.

SYSTEM MENU

EDIT PROGRAM – Rec. Controller

The fixture features an integrated DMX-recorder by which you can transmit the programmed scenes from your DMX-controller to the moving head. Adjust the desired scene numbers via the encoder (from – to). When you call up the scenes at your controller, they will automatically be transmitted to the moving head.

EDIT PROGRAM – Record Controller – Working with Built-In Programs

A Primary unit can send up to 3 different data groups to the Secondary units, i.e. a Primary unit can start 3 different Secondary units, which run 3 different programs. The Primary unit sends the 3 program parts in a continuous loop.

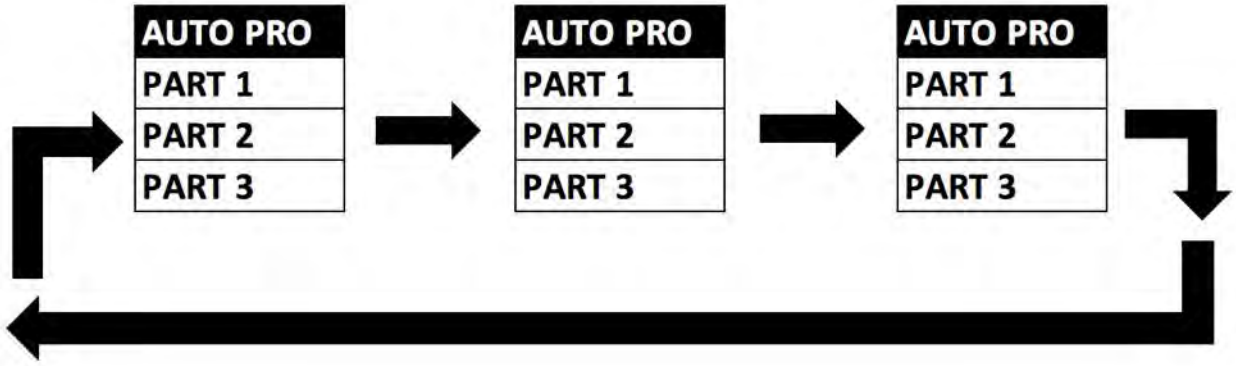

The Secondary unit receives data from the Primary unit according to the group which the Secondary unit was assigned to. If e.g. a Secondary unit is set to **“Secondary 1”** in the menu **“Set to Secondary”**, the Primary unit sends **“Auto Program Part 1”** to the Secondary unit.

If set to **“Secondary 2”**, the Secondary unit receives **“Auto Program Part 2”**.

S Y S T E M M E N U

EDIT PROGRAM – Record Controller – <u>Working with Built-In Program [continued]</u>

To start an Auto Program, proceed as follows:

1. Secondary Setting
Select **"Function Mode"**.
Press **ENTER** to confirm.
Select **"Set to Secondary"**.
Press **ENTER** to confirm.
Select **"Secondary 1"**, **"Secondary 2"** or **"Secondary 3"**.
Press **ENTER** to confirm.
Press **MODE/ESC** in order to return to the main menu.

2. Automatic Program Run
Select **"Function Mode"**.
Press **ENTER** to confirm.
Select **"Auto Program"**.
Press **ENTER** to confirm.
Select **"Primary"** or **"Alone"**.
Press **ENTER** to confirm.
Press **MODE/ESC** in order to return to the main menu.

3. Program Selection for Auto Pro Part
Select **"Edit Program"**.
Press **ENTER** to confirm.
Select **"Select Programs"**.
Press **ENTER** to confirm.
Select **"Auto Pro Part 1"**, **"Auto Pro Part 2"** or **"Auto Pro Part 3"** and select which Secondary program is to be sent. Selection **"Part 1"** means, that the Secondary unit runs the same program as the primary units.
Press **ENTER** to confirm.
Press **MODE/ESC** in order to return to the main menu.

4. Program Selection for Edit Program
Select "**Edit Program"**.
Press **ENTER** to confirm.
Select **"Edit Program"**.
Press **ENTER** to confirm.
Select the desired program to edit specific scenes into a specific program.
Press **ENTER** to confirm.
Press **MODE/ESC** in order to return to the main menu.

S Y S T E M M E N U

EDIT PROGRAM – Record Controller – <u>Working with Built-In Program [continued]</u>

5. Automatic Scene Recording
Select **"Edit Program"**.
Press **ENTER** to confirm.
Select **"Edit Scenes"**.
Select desired scene numbers. A maximum of 250 scenes can be programmed.
Press **ENTER** to confirm.
Press **MODE/ESC** in order to return to the main menu.

Example:
Program 2 includes scenes: 10, 11, 12, & 13
Program 4 includes scenes: 8, 9, & 10
Program 6 includes scenes: 12, 13, 14, & 15
Auto Pro Part 1 is Program 2
Auto Pro Part 2 is Program 3
Auto Pro Part 3 is Program 6
The 3 Secondary groups run the Auto Program in certain time segments. (See chart below)

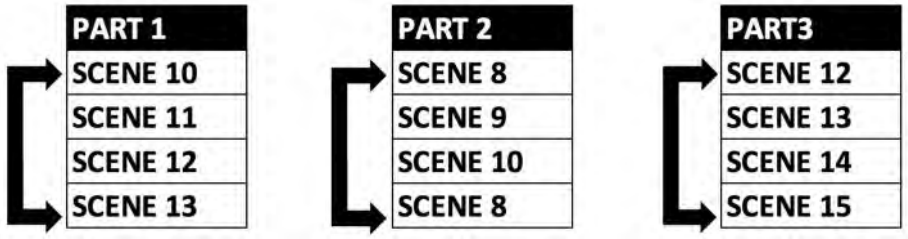

DMX CHANNEL FUNCTIONS AND VALUES

ELATION PROTEUS SMARTY HYBRID™			
DMX Channel Values / Functions (34 DMX Channels)			
Supports Software Versions: ≥ 1.1.3			
Features are subject to change without any prior written notice. *Rotation direction (Clockwise or Counterclockwise) of effects depends on orientation of the fixture head and Pan/Tilt settings.			
MODE / CHANNEL		**VALUE**	**FUNCTION**
STANDARD	**EXTENDED**		
1	1		**PAN MOVEMENT**
		0-255	PAN Movement
2	2		**PAN FINE MOVEMENT FINE**
		0-255	Fine 16-bit Control of PAN Movement
3	3		**TILT MOVEMENT**
		0-255	TILT Movement
4	4		**TILT MOVEMENT**
		0-255	Fine 16-bit Control of TILT Movement
5	5		**CYAN COLOR**
		0-255	0-WHITE ~ 255-100% CYAN
	6		**CYAN COLOR FINE**
		0-255	CYAN FINE 16-bit Adjustment
6	7		**MAGENTA COLOR**
		0-255	0-WHITE ~ 255-100% MAGENTA
	8		**MAGENTA COLOR FINE**
		0-255	MAGENTA FINE 16-bit Adjustment
7	9		**YELLOW COLOR**
		0-255	0-WHITE ~ 255-100% YELLOW
	10		**YELLOW COLOR FINE**
		0-255	YELLOW FINE 16-bit Adjustment

MODE / CHANNEL		VALUE	FUNCTION
STANDARD	EXTENDED		
8	11		**COLOR WHEEL**
		0-10	OPEN / WHITE
		11-19	RED - [RGB = 255, 0, 0]
		20-28	GREEN - [RGB = 0, 255, 0]
		29-37	YELLOW - [RGB = 255, 255, 0]
		38-46	MAGENTA - [RGB = 255, 0, 255]
		47-55	ORANGE - [RGB = 255, 102, 0]
		56-64	AQUA - [RGB = 10, 148, 22]
		65-73	PINK - [RGB = 217, 89, 153]
		74-82	CYAN - [RGB = 53, 227, 227]
		83-91	QUAD COLOR [R=163,8,8] [Y=242, 242,5] [B=11,71,212] [G=33,181,57]
		92-100	CTB - [RGB = 134, 165, 227]
		101-109	UV - [RGB = 70, 19, 173]
		110-118	CTO - [RGB = 209, 154, 92]
		119-127	BLUE - [RGB = 0, 51, 255]
		128-189	*CW COLOR Rotation from FAST to SLOW
		190-193	NO Rotation
		194-255	*CCW COLOR Rotation from SLOW to FAST
	12		**COLOR WHEEL FINE ADJUSTMENT**
		0-255	FINE 16-bit Adjustment of Color Wheel to Any Position

MODE / CHANNEL		VALUE	FUNCTION
STANDARD	EXTENDED		
9	13		**ROTATING GOBOS, CONTINUOUS ROTATION [WHEEL 1]**
		0-10	BEAM OPEN
		11-21	SPOT OPEN
		22-31	Rotate Gobo 1
		32-41	Rotate Gobo 2
		42-51	Rotate Gobo 3
		52-61	Rotate Gobo 4
		62-71	Rotate Gobo 5
		72-81	Rotate Gobo 6
		82-91	Rotate Gobo 7
		92-101	Rotate Gobo 8
		102-112	Shake SLOW to FAST Gobo 1
		113-123	Shake SLOW to FAST Gobo 2
		124-134	Shake SLOW to FAST Gobo 3
		135-145	Shake SLOW to FAST Gobo 4
		146-156	Shake SLOW to FAST Gobo 5
		157-167	Shake SLOW to FAST Gobo 6
		168-178	Shake SLOW to FAST Gobo 7
		179-189	Shake SLOW to FAST Gobo 8
		190-221	*CCW Gobo Wheel Rotation from FAST to SLOW
		222-223	RESERVED
		224-255	*CW Gobo Wheel Rotation from SLOW to FAST
10	14		**ROTATING GOBOS, INDEX ROTATION [WHEEL 1]**
		0-127	Gobo Indexing
		128-189	*CW Gobo Rotation from FAST TO SLOW
		190-193	NO Rotation
		194-255	*CCW Gobo Rotation from SLOW to FAST
	15		**ROTATING GOBOS, FINE INDEX ROTATION [WHEEL 1]**
		0-255	Gobo Rotation FINE 16-bit Indexing

MODE / CHANNEL		VALUE	FUNCTION
STANDARD	EXTENDED		
11	16		**STATIC / FIXED GOBOS [GOBO WHEEL 2]**
		0-9	OPEN
		10-17	Static / Fixed Gobo 1
		18-25	Static / Fixed Gobo 2
		26-33	Static / Fixed Gobo 3
		34-41	Static / Fixed Gobo 4
		42-49	Static / Fixed Gobo 5
		50-57	Static / Fixed Gobo 6
		58-65	Static / Fixed Gobo 7
		66-73	Static / Fixed Gobo 8
		74-81	Static / Fixed Gobo 9
		82-89	Static / Fixed Gobo 10
		90-97	Static / Fixed Gobo 11
		98-105	Static / Fixed Gobo 12
		106-112	Shake SLOW to FAST Gobo 1
		113-119	Shake SLOW to FAST Gobo 2
		120-126	Shake SLOW to FAST Gobo 3
		127-133	Shake SLOW to FAST Gobo 4
		134-140	Shake SLOW to FAST Gobo 5
		141-147	Shake SLOW to FAST Gobo 6
		148-154	Shake SLOW to FAST Gobo 7
		155-161	Shake SLOW to FAST Gobo 8
		162-168	Shake SLOW to FAST Gobo 9
		169-175	Shake SLOW to FAST Gobo 10
		176-182	Shake SLOW to FAST Gobo 11
		183-189	Shake SLOW to FAST Gobo 12
		190-221	*CW Gobo Wheel Rotation from FAST to SLOW
		222-223	RESERVED
		224-255	*CCW Gobo Wheel Rotation from SLOW to FAST
	17		**STATIC / FIXED GOBOS, FINE INDEX ROTATION [WHEEL 2]**
		0-255	Gobo Rotation FINE 16-bit Indexing

MODE / CHANNEL		VALUE	FUNCTION
STANDARD	EXTENDED		
12	18		**ROTATING PRISMS, PRISM / GOBO MACROS**
		0-31	OPEN
		32-64	16-Facet PRISM
		65- 94	4-Facet Linear PRISM
		95- 127	16 + 4 Facet PRISMS COMBINED
		128-135	Prism / Gobo Macro 1
		136-143	Prism / Gobo Macro 2
		144-151	Prism / Gobo Macro 3
		152-159	Prism / Gobo Macro 4
		160-167	Prism / Gobo Macro 5
		168-175	Prism / Gobo Macro 6
		176-183	Prism / Gobo Macro 7
		184-191	Prism / Gobo Macro 8
		192-199	Prism / Gobo Macro 9
		200-207	Prism / Gobo Macro 10
		208-215	Prism / Gobo Macro 11
		216-223	Prism / Gobo Macro 12
		224-231	Prism / Gobo Macro 13
		232-239	Prism / Gobo Macro 14
		240-247	Prism / Gobo Macro 15
		248-255	Prism / Gobo Macro 16
13	19		**ROTATING PRISMS, PRISMS INDEX ROTATION**
		0-127	Prism Indexing
		128-189	*CW Prism Rotation from FAST to SLOW
		190-193	NO Rotation
		194-255	*CCW Prism Rotation from SLOW to FAST
	20		**ROTATING PRISMS, PRISMS FINE INDEX ROTATION**
		0-255	Gobo Rotation FINE 16-bit Indexing
14	21		**FOCUS**
		0-255	Continuous Adjustment from NEAR to FAR
	22		**FOCUS FINE**
		0-255	Continuous FINE 16-Bit Focus Adjustment

MODE / CHANNEL		VALUE	FUNCTION
STANDARD	EXTENDED		
15	23		**MOTORIZED ZOOM**
		0-255	ZOOM Adjustment from SMALL to BIG
	24		**MOTORIZED ZOOM FINE**
		0-255	ZOOM FINE 16-bit Adjustment
	25		**AUTO FOCUS**
			SPOT MODE
		0-31	AUTO FOCUS OFF
		32-59	26.2 ft (8m)
		60-87	29.5 ft (9m)
		88-115	32.8 ft (10m)
		116-143	36.0 ft (11m)
		144-171	39.4 ft (12m)
		172-199	42.7 ft (13m)
		200-227	46.0 ft (14m)
		228-255	49.2 ft (15m)
			BEAM MODE
		0-21	AUTO FOCUS OFF
		22-39	26.2 ft (8m)
		40-57	29.5 ft (9m)
		58-75	32.8 ft (10m)
		76-93	36.0 ft (11m)
		94-111	39.4 ft (12m)
		112-129	42.7 ft (13m)
		130-147	46.0 ft (14m)
		148-165	49.2 ft (15m)
		166-183	52.5 ft (16m)
		184-201	55.8 ft (17m)
		202-219	59.0 ft (18m)
		220-237	62.3 ft (19m)
		238-255	65.6 ft (20m)
	26		**AUTO FOCUS FINE**
		0-255	Continuous FINE 16-bit Focus Adjustment

MODE / CHANNEL		VALUE	FUNCTION
STANDARD	EXTENDED		
16	27		**SHUTTER, STROBE**
		0-31	Shutter CLOSED
		32-63	NO Function (Shutter OPEN)
		64-95	Strobe Effect SLOW to FAST
		96-127	NO Function (Shutter OPEN)
		128-159	Pulse Effect In Sequences
		160-191	NO Function (Shutter OPEN)
		192-223	Random Strobe Effect SLOW to FAST
		224-255	NO Function (Shutter OPEN)
17	28		**DIMMER INTENSITY**
		0-255	Intensity 0 to 100%
18	29		**DIMMER INTENSITY FINE**
		0-255	Intensity FINE 16-bit Adjustment 0 to 100%
19	30		**FROST**
		0-127	DISABLE FROST
		128-255	ENABLE FROST
	31		**GOBO / CMY / COLOR MACRO SPEED**
		0-255	MAX to MIN Speed

MODE / CHANNEL		VALUE	FUNCTION
STANDARD	EXTENDED		
	32		**CMY / COLOR MACROS**
		0-31	OFF
		32-39	Macro 1
		40-47	Macro 2
		48-55	Macro 3
		56-63	Macro 4
		64-71	Macro 5
		72-79	Macro 6
		80-87	Macro 7
		88-95	Macro 8
		96-103	Macro 9
		104-111	Macro 10
		112-119	Macro 11
		120-127	Macro 12
		128-135	Macro 13
		136-143	Macro 14
		144-151	Macro 15
		152-159	Macro 16
		160-167	Macro 17
		168-175	Macro 18
		176-183	Macro 19
		184-191	Macro 20
		192-199	Macro 21
		200-207	Macro 22
		208-215	Macro 23
		216-223	Macro 24
		224-231	Macro 25
		232-239	Macro 26
		240-247	Macro 27
		248-255	RANDOM CMY
	33		**PAN / TILT MOVEMENT SPEED**
		0-225	MAX to MIN Speed
		226-235	Blackout by PAN/TILT Movement
		236-245	Blackout by ALL WHEEL Movement
		246-255	NO FUNCTION

MODE / CHANNEL		VALUE	FUNCTION
STANDARD	EXTENDED		
20	34		**LAMP ON/OFF, RESET, INTERNAL PROGRAMS**
		0-19	COLOR Change Normal
		20-29	COLOR Change to Any Position
		30-39	RESERVED
		40-49	LAMP ON
		50-59	LAMP OFF
		60-66	**LAMP POWER 190W**
		67-73	**LAMP POWER 240W**
		74-79	**LAMP POWER 280W**
		80-84	All MOTORS Reset
		85-87	MOVEMENT Reset
		88-90	COLOR Reset
		91-93	GOBO Reset
		94-96	DIMMER Reset
		97-99	OTHER MOTORS Reset
		100-119	INTERNAL PROGRAM 1
		120-139	INTERNAL PROGRAM 2
		140-159	INTERNAL PROGRAM 3
		160-179	INTERNAL PROGRAM 4
		180-199	INTERNAL PROGRAM 5
		200-219	INTERNAL PROGRAM 6
		220-239	INTERNAL PROGRAM 7
		240-249	RESERVED
		250-251	Display OFF
		252-253	Display ON
		254-255	RESERVED

ERROR CODES

When power is applied, the unit will automatically enter a **"Reset/Test"** mode. This mode brings all the internal motors to a home position. If there is an internal problem with one or more of the motors an error code will flash in the display in the form of **"XXer"** were as XX will represent a function number. For example, when the display shows **"0Er"** it means there is some type of error with the Pan motor. If there are multiple errors during the start-up process they will all flash in the display. For example: if the fixtures has errors on **Channel 1**, **2**, and **5** all at the same time, you will see the error message **"01Er", "02Er"**, and **"05Er"** flash repeated 5 times.

If an error does occur during the initial start-up procedure the fixture will self-generate a second reset signal and try to realign all the motors and correct the errors. If the error persists after a second attempt a third attempt will be made. If after a third attempt all the errors have not been corrected the fixture will make the following determinations:

3 or More Errors - The fixture cannot function properly with three or more errors therefore the fixture will place itself in a stand-by mode until subsequent repairs can be made.

Less Than 3 Errors - The fixture has less than 3 errors; therefore, most other functions will work properly. The fixture will attempt to operate normally until the errors can be correct by a technician. The errors in question will remain flashing in the display as a reminder of internal errors.

Error Codes subject to change without notice.	
ERROR CODES	**DESCRIPTION**
PAN Er	Movement is not located in the default position after the reset. This message will appear after a fixture reset if the magnetic-indexing circuit malfunctions (sensor failed, or magnet is missing) or there is a motor failure (defective motor or a defective motor IC drive on the main PCB). This error may also be displayed if the head/yoke was blocked during a reset function.
TILT Er	
Cyan Color Wheel Er	Movement is not located in the default position after the reset. This message will appear after a fixture reset if the magnetic-indexing circuit malfunctions (sensor failed, or magnet is missing) or there is a motor failure (defective motor or a defective motor IC drive on the main PCB).
Magenta Color Wheel Er	
Yellow Color Wheel Er	
Color Wheel Er	
Gobo Wheel 1 Er	
Gobo Rotation Wheel 1 Er	
Dimmer Wheel Er	
Fixed Gobo Wheel Er	
Prim 3 Wheel Er	
Prism Rotation 1 Wheel Er	
Prism 16 Wheel Er	
Focus Wheel Er	
Zoom Wheel Er	
Frost Wheel Er	

S P E C I F I C A T I O N S

SOURCE
Philips™ MSD Platinum 200 Flex 280W Lamp
Up To 6,000 Hour Lamp Life*
*Test lab conditions. May vary depending on several factors including but not limited to:
Environmental Conditions, Power/Voltage, Usage Patterns (On-Off Cycling), Control, Dimming, and Lamp Mode.

PHOTOMETRIC DATA
11,000 Total Output Lumen
128,426 LUX 11,931 FC @49.2' (15m) (Min Zoom Beam) 135,108 LUX 12,552 FC @16.4' (5m) (Min Zoom Spot)

Beam
Zoom Range 1° - 18°
Beam Angle 1.1° - 7°
Field Angle 2.6° - 17.8°

Spot
Zoom Range 3° - 27°
Beam Angle 1.8° - 18.7°
Field Angle 2.8° - 28.8°

Wash
Zoom Range 5° - 33°
Beam Angle 2.6° - 24.9°
Field Angle 4.6° - 40.7°

EFFECTS
Beam, Spot, Wash Modes
Motorized Zoom 1° - 18° Beam, 3° - 27° Spot, 5° - 33° Wash
Full Frost Filter for Wash Effects
16-Facet and 4-Facet Linear Prisms
CMY Color, Gobo, Prism Macros
Motorized Focus with Auto-Focus Feature
High Speed Shutter and Strobe

COLOR
Full CMY Color Mixing System
13 Colors including Quad Color, CTO, CTB, and UV

GOBOS
2 Gobo Wheels
8 Rotating / Indexing Interchangeable Glass Gobos
12 Static-Stamped Metal Gobos

CONTROL / CONNECTIONS
2 DMX Channel Modes (20 / 34)
DMX, RDM, Art-NET, sACN Protocol Support
(6) Button Touch Control Panel
Full Color 180° Reversible LCD Menu Display
IP65 5pin XLR DMX In/Out
IP65 RJ45 ethernet In/Out
IP65 Locking Power Cable In
With Wired Digital Communication Network

SIZE / WEIGHT
Length: 17.5 in (444.71mm)
Width: 17.88 in (459mm)
Height: 26.97 in (685mm)
Weight: 78.26 lbs. (35.5kg)

ELECTRICAL / THERMAL
AC 100-240V 50/60Hz
Max Power Consumption 500W
BTU/hr (+/- 10%) 1705

APPROVALS / RATINGS
CE | cETLus | IP65

Specifications and improvements in the design of this unit and this manual are subject to change without notice.

DIMENSIONAL DRAWINGS

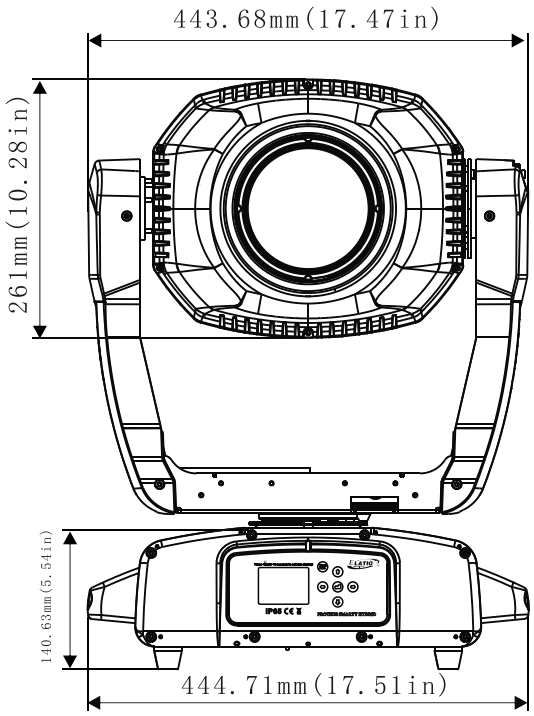

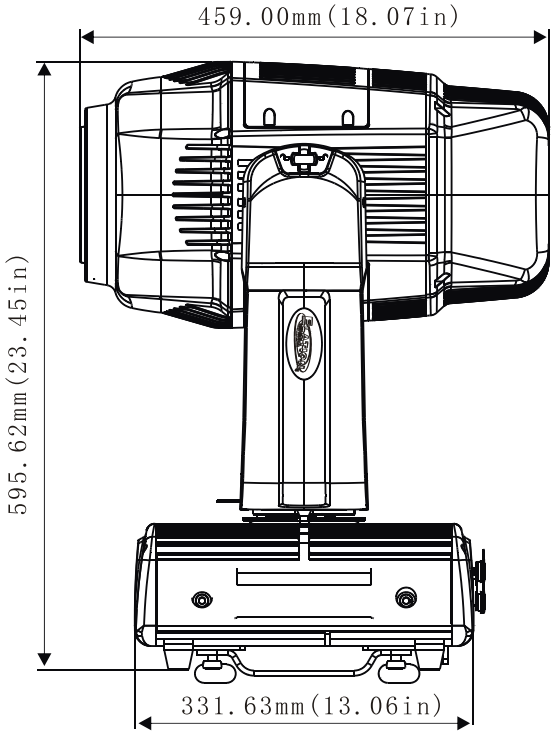

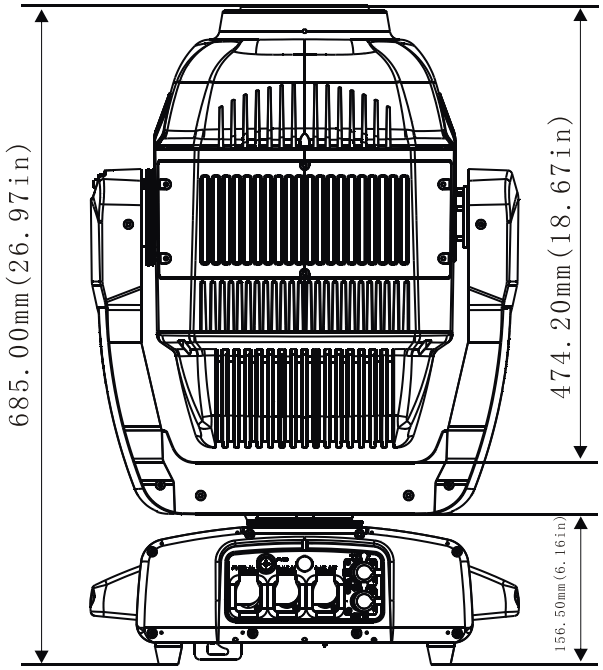

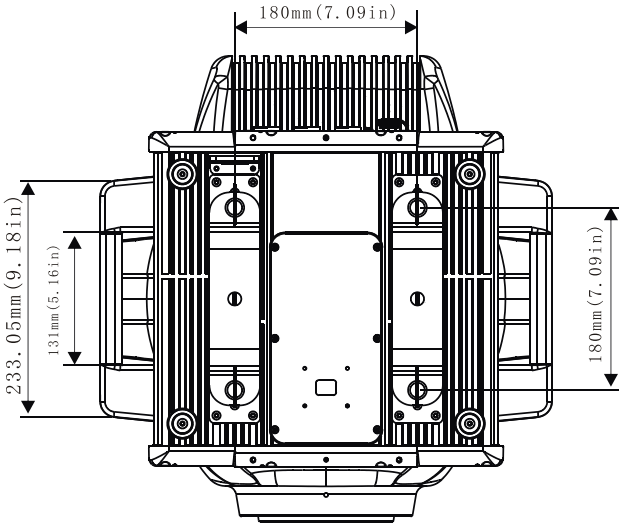

Specifications and improvements in the design of this unit and this manual are subject to change without notice.

DIMENSIONAL DRAWINGS – FOAM INLAY

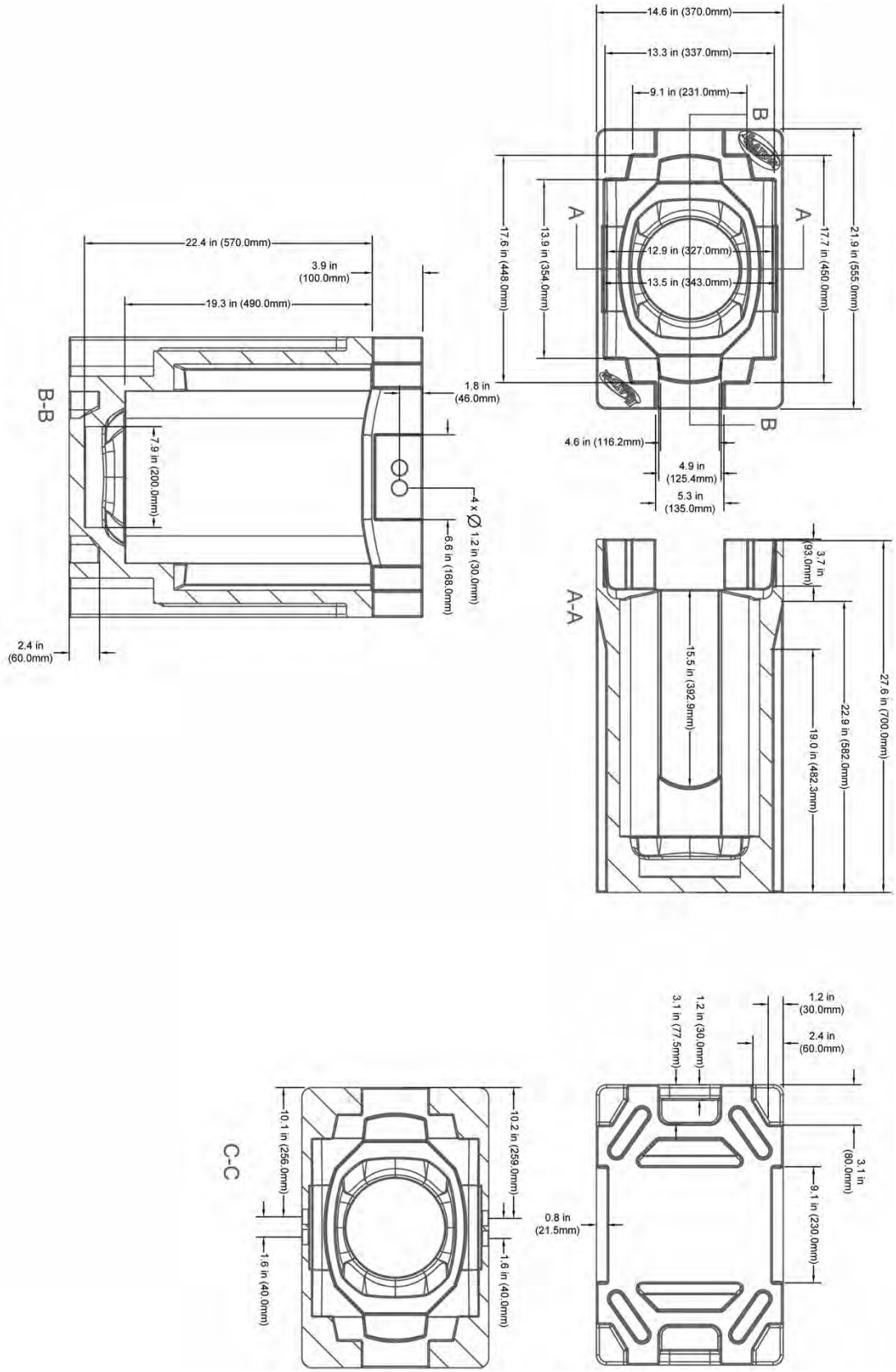

OPTIONAL ACCESSORIES

ORDER CODE	ITEM
IP TESTER	IP Fixture Vacuum and Pressure Leak Tester
TRIGGER CLAMP	Heavy Duty Wrap Around Hook Style Clamp
STR527	5 ft. (1.5m) IP65 5pin XLR Cable
CAT628	5 ft. (1.5m) IP65 CAT6 Ethernet Cable
	Additional Cable Lengths Available

FCC STATEMENT

This device complies with Part 15 of the FCC Rules. Operation is subject to the following two conditions: (1) this device may not cause harmful interference, and (2) this device must accept any interference received, including interference that may cause undesired operation.

FCC RADIO FREQUENCY INTERFERENCE WARNINGS & INSTRUCTIONS

This product has been tested and found to comply with the limits as per Part 15 of the FCC Rules. These limits are designed to provide reasonable protection against harmful interference in a residential installation. This device uses and can radiate radio frequency energy and, if not installed and used in accordance with the included instructions, may cause harmful interference to radio communications. However, there is no guarantee that interference will not occur in a particular installation. If this device does cause harmful interference to radio or television reception, which can be determined by turning the device off and on, the user is encouraged to try to correct the interference by one or more of the following methods:

- Reorient or relocate the device.
- Increase the separation between the device and the receiver.
- Connect the device to an electrical outlet on a circuit different from which the radio receiver is connected.
- Consult the dealer or an experienced radio/TV technician for help.

Europe Energy Saving Notice

Energy Saving Matters (EuP 2009/125/EC)

Saving electric energy is a key to help protecting the environment. Please turn off all electrical products when they are not in use. To avoid power consumption in idle mode, disconnect all electrical equipment from power when not in use. Thank you.