FeiyuTech

SCORP Mini

Instructions V 1.0

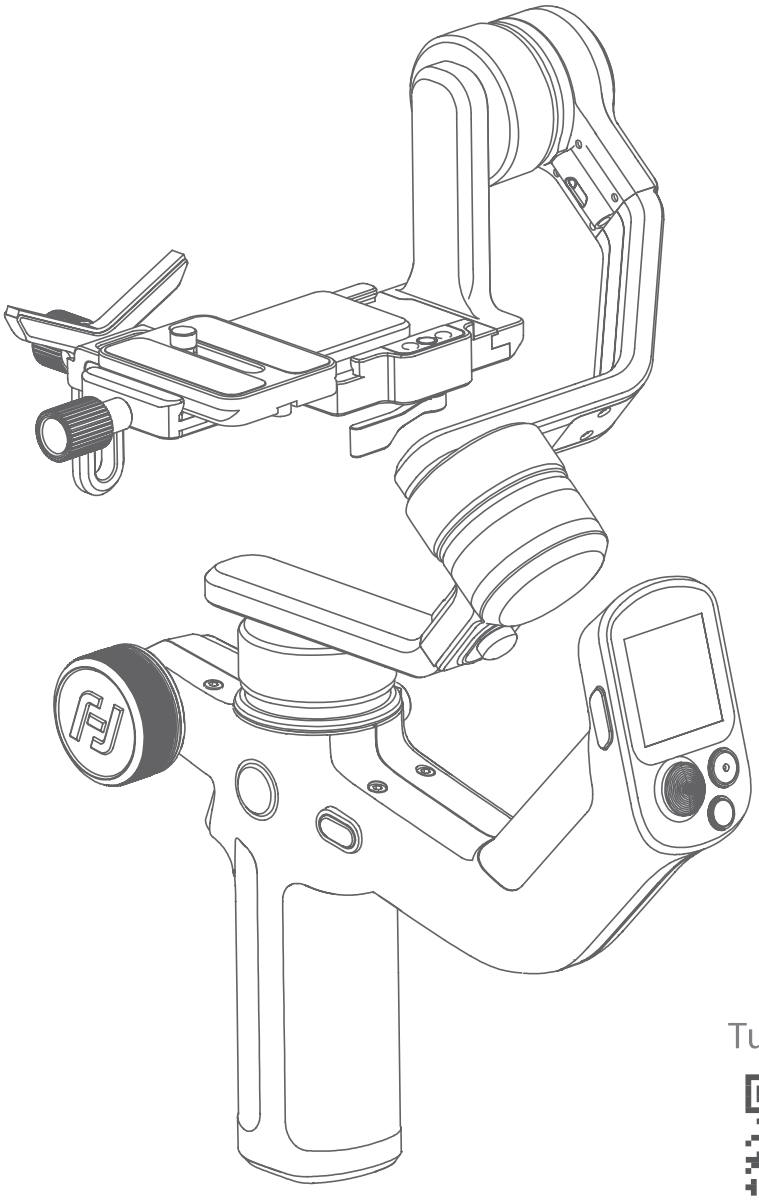

Tutorial Videos

Catalogue

1. Overview **1**

2. Getting started **2**

2.1 Charging 2

2.2 Adjust the gimbal to gimbal balancing position 2

3. Mounting the Camera/Smartphone **3**

3.1 Attach the quick release plate 3

3.2 Install lens holder (Optional) 3

3.3 Mount camera on gimbal 4

4. Gimbal Balancing **4**

4.1 Balancing the tilt axis 5

4.2 Balancing the roll axis 6

4.3 Balancing the pan axis 6

5. Power ON/ OFF& Wake up **7**

5.1 Power ON/ OFF 7

5.2 Lock/Unlock screen 8

5.3 Sleep/Wake up 8

6. Function/Modes introduction **8**

6.1 Follow modes introduction 8

6.2 Other function introduction 9

7. App Connecting **10**

7.1 Connect App 10

7.2 Function introduction of Feiyu SCORP App 11

7.3 Function introduction of Feiyu ON App 15

8. Operation **17**

8.1 Button operation 17

8.2 Touch screen operation 20

8.3 Function operation 23

8.4 Control ports 28

9. Specifications **29**

Introduction

Feiyu SCORP-Mini is a professional 3-axis handheld gimbal for mirrorless camera, pocket camera, action camera, smartphone which developed by Guilin Feiyu Technology Incorporated Company.

Feiyu SCORP-Mini is designed with button area, multifunction knob and touch screen, which can switch follow modes, control the rotation, control focus motor and the parameters settings by one hand. The camera shutter cable is equipped for controlling the photo taking, video recording and focusing directly at handle.

Feiyu SCORP- Mini also come with camera control port and extension port, which support to connect focus motor and other extension device.

Tutorial

·The tutorial videos can be watched at FeiyuTech official website or scan the QR code.
https://www.feiyu-tech.com/play/

Download the App

When mounting mirrorless camera, pocket camera or action camera on gimbal for shooting, please download "**Feiyu SCORP**".
When mounting smartphone on gimbal for shooting, please download "**Feiyu ON**".

Scan the QR code to download the app, or search for "**Feiyu SCORP**", "**Feiyu ON**" in the App Store or Google Play.

* Feiyu SCORP: Requires iOS 10.0 or above, Android 6.0 or above.
  Feiyu ON: Requires iOS 9.0 or above, Android 6.0 or above.

iOS

Feiyu SCORP

Feiyu ON

Android

Feiyu SCORP

Feiyu ON

1. Overview

* Not include camera.

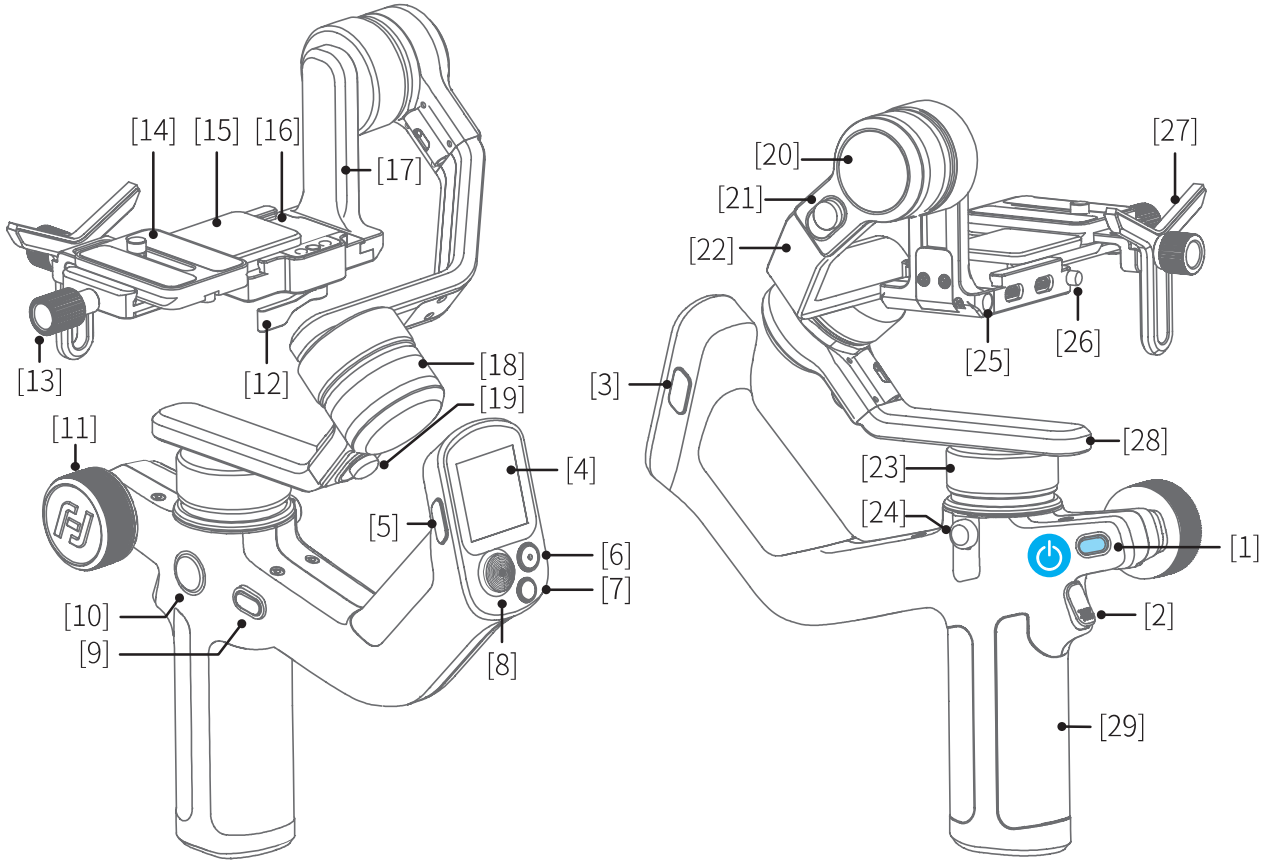

[1] Power button
[2] Trigger button
[3] F2 button
[4] Touch screen
[5] F1 button
[6] Shutter button
[7] Mode button
[8] Joystick
[9] FPV button
[10] Knob function switching button
[11] Multifunction knob
[12] Slider lock
[13] Quick release plate safety lock
[14] Quick release plate
[15] Fixed plate slider
[16] Fixed plate
[17] Slide arm
[18] Roll axis
[19] Roll lock
[20] Tilt axis
[21] Tilt lock
[22] Cross arm
[23] Pan axis
[24] Pan lock
[25] Mounting hole for focus motor support rod
[26] Slider safety lock
[27] Lens holder
[28] Versatile arm
[29] Handle

2. Getting started

2.1 Charging

Please fully charge the battery before power on the gimbal for the first time.

Charging with USB 2.0 to Type-C cable, supports quick charge which charging power ⩽ 18W.

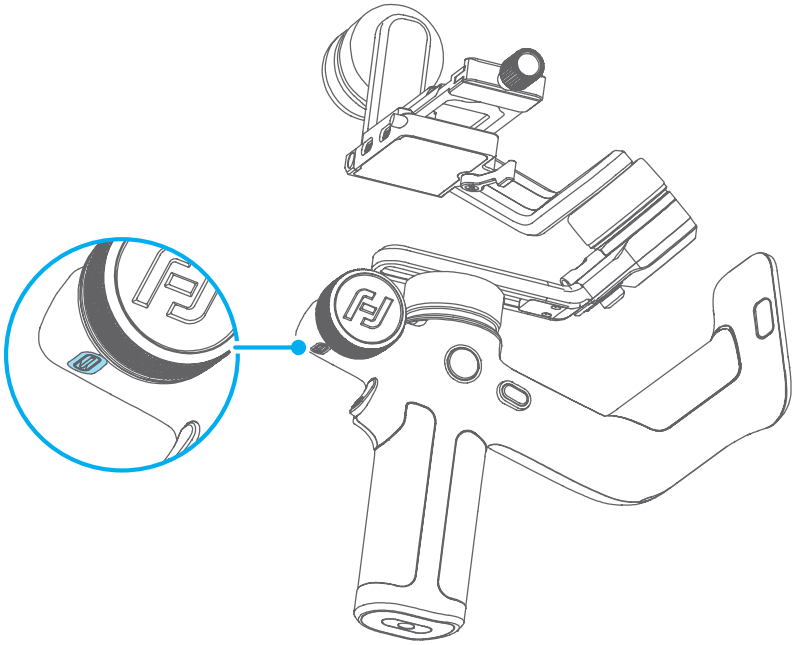

2.2 Adjust the gimbal to gimbal balancing position

The gimbal is folded by default, please unlock all the three axes and adjust the gimbal to **gimbal balancing position**, and then lock the three axes.

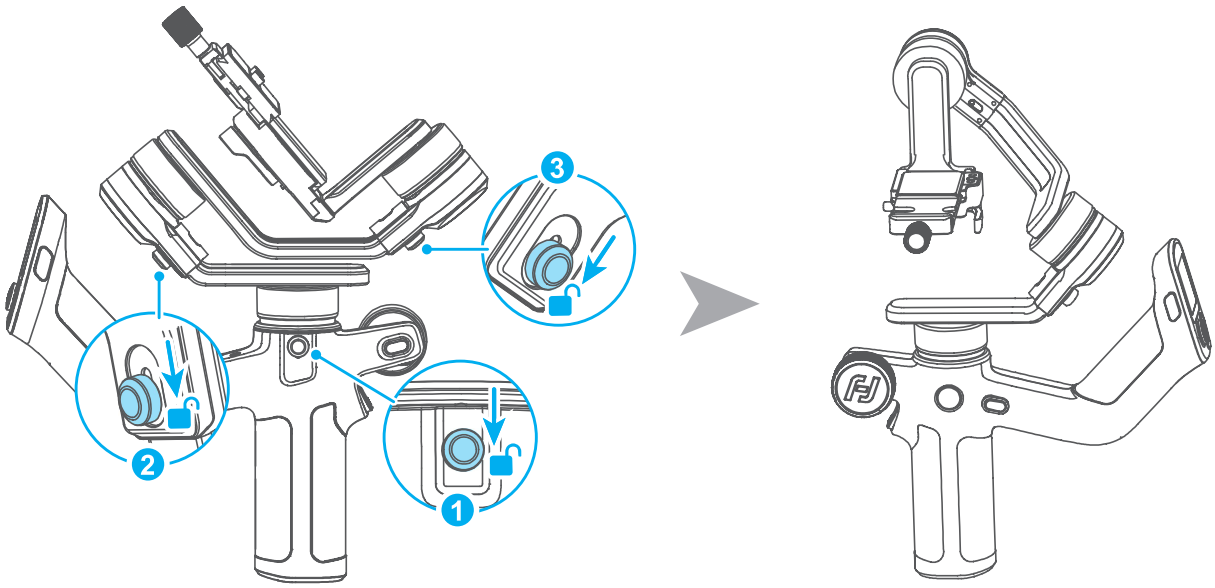

Gimbal folded position

Gimbal balancing position

3. Mounting the Camera/Smartphone

Take camera mounting as an example.

Before mounting the camera, make sure the camera is ready for shooting (Install the camera lens, and the lens cover should be removed, the memory card and battery needs to be inserted to the camera, and battery is fully charged) , complete all the steps which mentioned in chapter "2. Getting started" and the gimbal is adjusted to **gimbal balancing position**. Make sure the gimbal is powered off or in sleep mode before mounting the camera.

3.1 Attach the quick release plate

Attach the quick release plate to camera by tightening the screw.

If the camera doesn't have the 1/4-20 inch screw hole, please put the camera on mount adapter, which has 1/4-20 inch screw hole, and then follow the steps above to mount it.
Users can mount smartphone into the optional smartphone holder, and follow the steps above to install it on the gimbal.

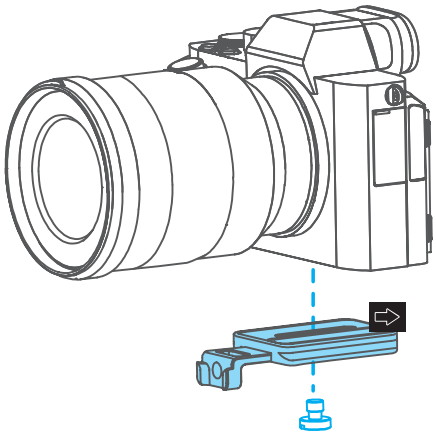

3.2 Install lens holder (Optional)

Install the lens holder on the quick release plate if needed, the rubber of the lens holder must be directly under the lens. It is recommended to use the lens holder when using a long or heavy lens.

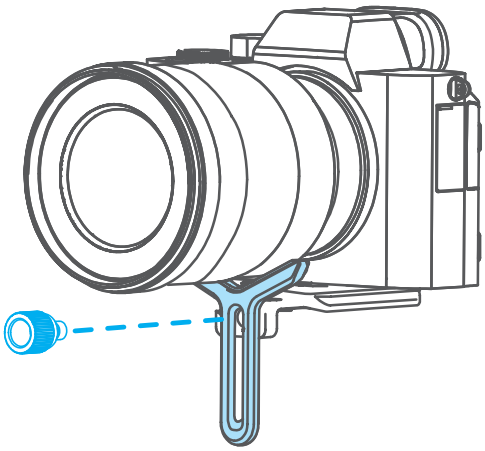

3.3 Mount camera on gimbal

Unlock the quick release plate safety lock ① , install the plate with the mounted camera into the slot ② in direction of icon, lock the safety lock ① once the camera is roughly balanced. It is recommended to push the camera against the tilt axis. Unlock the slider lock ③ to move the camera left or right according to camera's width, then lock the slider lock ③ .

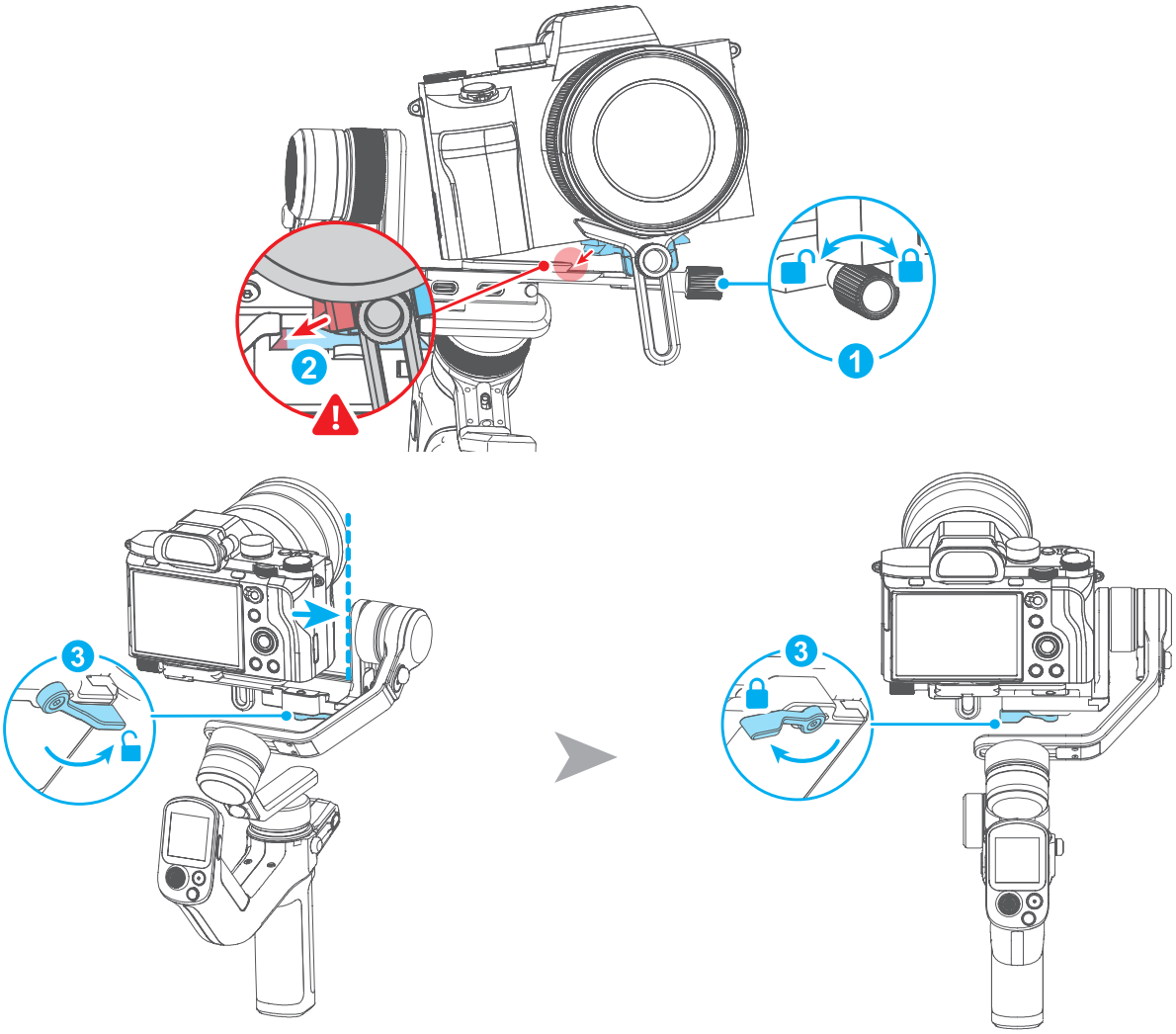

4. Gimbal Balancing

Please balance the gimbal before shooting. Take camera mounting as an example. Make sure the camera and lens are ready for shooting, and the gimbal is powered off or in sleep mode before balancing. **It is recommended to hold up the camera first, then move the slide arm, cross arm and vertical arm.**

Tutorial Videos

4.1 Balancing the tilt axis

4.1.1 Balancing the vertical tilt

a. Unlock the tilt lock ①, and loosen the slide arm lock knob ②.

b. Rotate the tilt axis so that the camera lens is pointing upward. Check the direction which the lens tilts to.

c. If the lens tilts to one side, then the camera is that side heavy, move the slide arm ③ to the opposite direction, until the camera is steady pointing upward.

d. Tighten the slide arm lock knob ② while holding the camera.

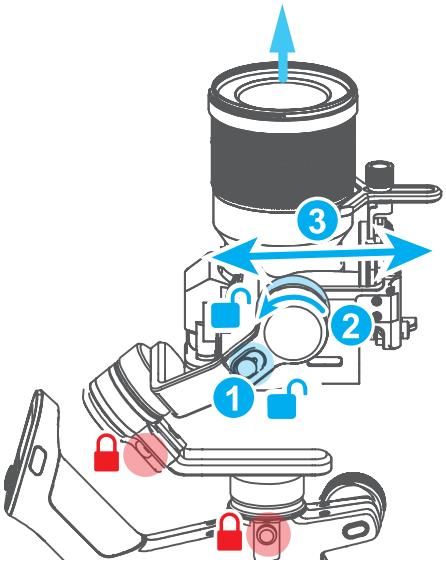

4.1.2 Adjust depth for the tilt axis

a. Rotate the tilt axis so that the camera lens is pointing forward. Check the direction which the lens tilts to.

b. If the lens tilts to one side, then the camera is that side heavy, unlock the quick release plate safety lock ① and then move the quick release plate to the opposite direction, until the camera is steady pointing forward.

c. Lock the quick release plate safety lock ① while holding the camera.

The tilt axis is balanced when the camera is steady while tilted up or down by 45°.

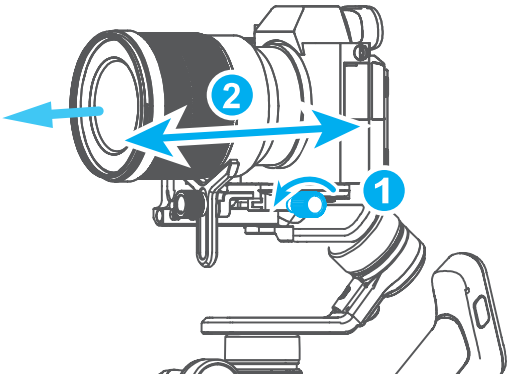

4.2 Balancing the roll axis

a. Unlock the roll lock ① , check the direction which the camera tilts to.

b. If the camera tilts to one side, then the camera is that side heavy, loosen the cross arm lock knob ② and then move the cross arm to the opposite direction, until the camera can stay still and horizontal to the ground.

c. Tighten the cross arm lock knob ② .

The roll axis is balanced when the camera can stay still and horizontal to the ground.

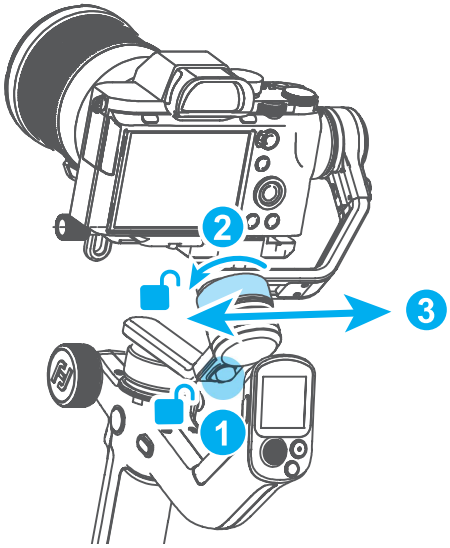

4.3 Balancing the pan axis

a. Unlock the pan lock ① . Hold the tripod, and tilt the gimbal forward until it is horizontal to the ground.

b. If the camera tilts to one side, then the camera is that side heavy, loosen the vertical arm lock knob ② and then move the vertical arm ③ to the opposite direction, until the camera can stay still and horizontal to the ground.

c. Tighten the vertical arm lock knob ② .

The pan axis is balanced when the camera can stay still and horizontal to the ground.

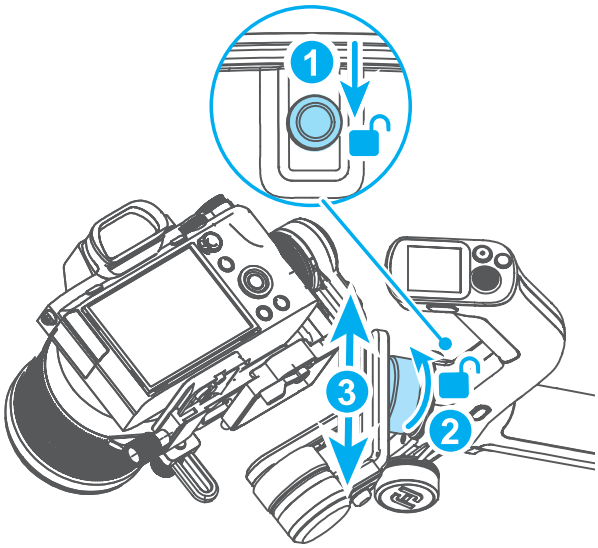

5. Power ON/ OFF& Wake up

5.1 Power ON/ OFF

(1) Before power on the gimbal, make sure you have balanced gimbal, and unlocked all the three axes.
(2) If you haven't unlocked all the 3 axes, gimbal will enter sleep mode to protect itself. Please single tap power button to wake up gimbal after unlocked all the 3 axes.

! Please set motor power first after powering on gimbal for the first time or after changing a new camera/lens. (Please refer to chapter 8.3.1)

Long press the power button and release it when you hear the beep sound to power on/ off.

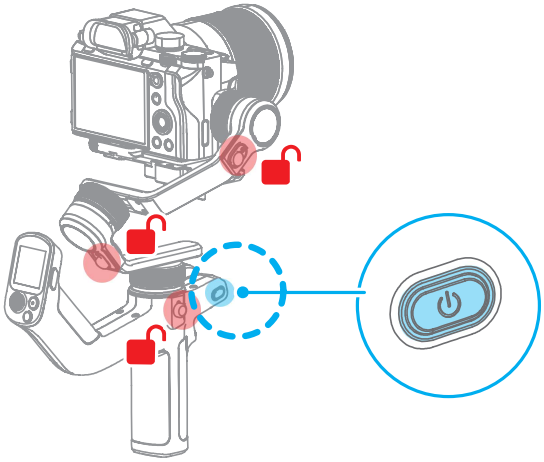

5.2 Lock/Unlock screen

Lock screen: Single tap to lock screen.

Unlock screen: Single tap again to unlock the screen.

Lock screen

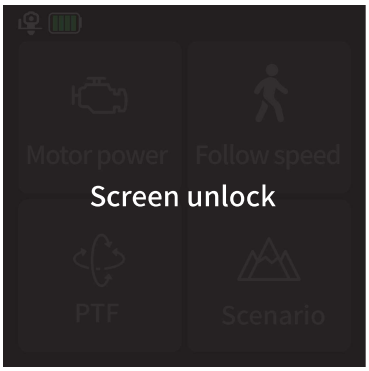

Unlock screen

5.3 Sleep/Wake up

Sleep: Double tap power button to enter sleep mode.

Wake up: Single tap power button or tap the icon on the screen in sleep mode to wake up gimbal.

6. Function/Modes introduction

6.1 Follow modes introduction

① **PF** (Default mode)
Pan follow, only the pan axis follows the movement of user's hand.

② **PTF**
Pan and tilt follow, where both the pan and tilt axes follow the movement of user's hand, but roll axis does not.

③ **FPV**
Pan, tilt and roll follow, where all 3 axes follow the movement of user's hand.

④ **Lock**

All 3 axes do not follow the movement of user's hand, gimbal keeps the direction of the camera fixed.

⑤ **FFW**

Flash follow, where all 3 axes follow the movement of user's hand in high follow speed.

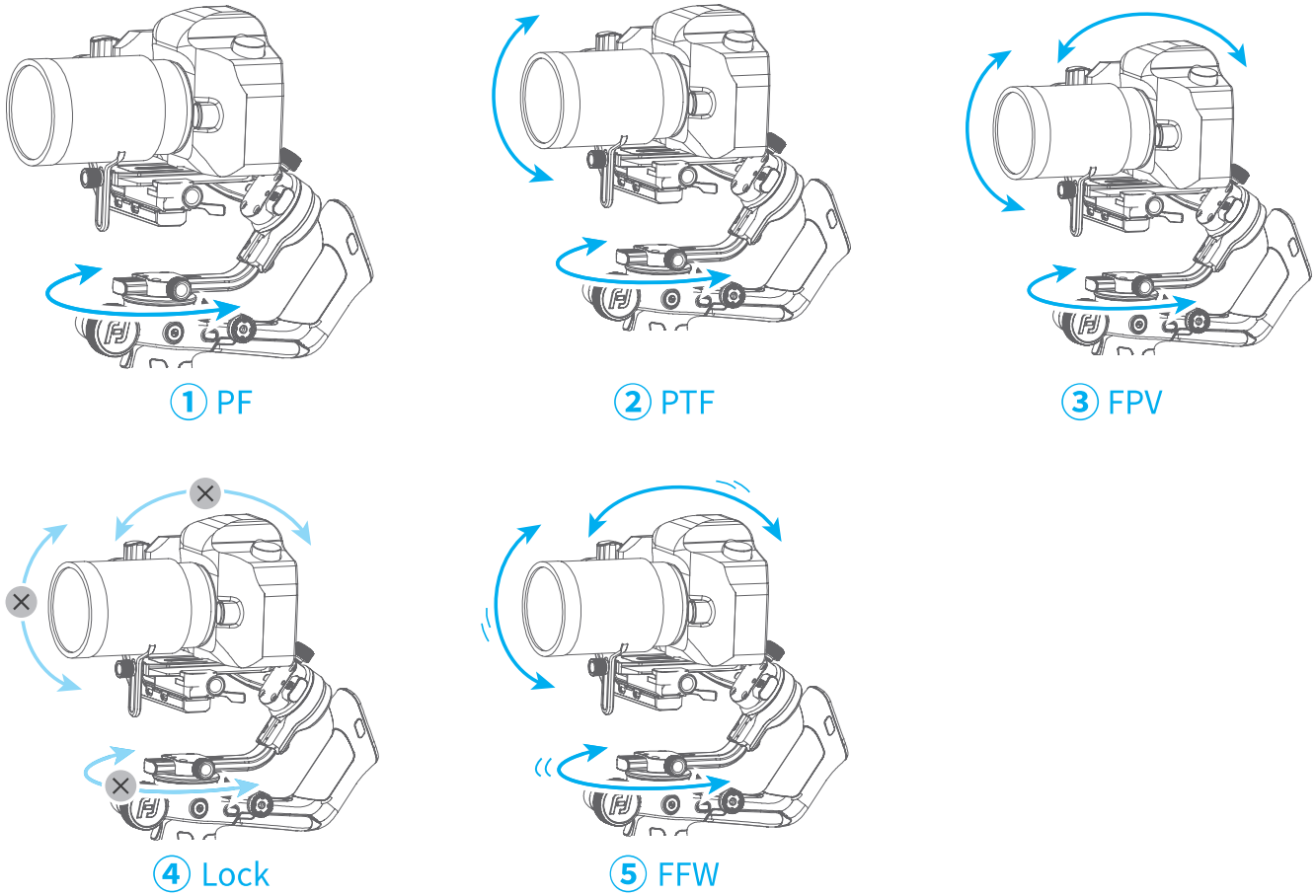

6.2 Other function introduction

Auto rotation (Please refer to chapter 8.3.5)

Camera will auto rotate to shoot according to the rotation speed and direction that set by users. It can be used to achieve the image rotating scene which been used frequently in movie Inception.

Portrait mode (Please refer to chapter 8.3.7)

Enter portrait mode for recording portrait video or live streaming.

Selfie mode (Please refer to chapter 8.3.9)

The camera turns 180° horizontally, selfie shooting is available.

Track video

Record track video according to the waypoints which has been set.

Manual lock

Manually move camera to desired position, and hold for half a second. New tilt /pan positions are automatically saved.

7. App Connecting

Download the App

When mounting mirrorless camera, pocket camera or action camera on gimbal for shooting, please download "**Feiyu SCORP**".
When mounting smartphone on gimbal for shooting, please download "**Feiyu ON**".

Scan the QR code to download the app, or search for "**Feiyu SCORP**", "**Feiyu ON**" in the App Store or Google Play.

* Feiyu SCORP: Requires iOS 10.0 or above, Android 6.0 or above.
  Feiyu ON: Requires iOS 9.0 or above, Android 6.0 or above.

iOS		Android	
Feiyu SCORP	Feiyu ON	Feiyu SCORP	Feiyu ON

7.1 Connect App

When mounting mirrorless camera, pocket camera, or action camera on gimbal for shooting, please use "**Feiyu SCORP**" App. When mounting smartphone on gimbal for shooting, please use "**Feiyu ON**" App.
Follow the prompts to register for the first time.

7.1.1 Connect with Feiyu SCORP App

(1)Turn on the gimbal

(2)Turn on the smartphone Bluetooth, run Feiyu SCORP App, tap the top of the home page to connect gimbal.
After the connection succeed, it's easy to control gimbal via App, including control the pan and tilt axis angle with the virtual joystick, switch modes, set motor power/ camera parameters/follow speed, set other functions, parameters, and update firmware.

7.1.2 Connect with Feiyu ON App

(1) Turn on the smartphone Bluetooth, run Feiyu ON App, and App wil search gimbal automatically, follow the prompts to connect gimbal.
(2) After the connection succeed, it's easy to control gimbal via App, including control the pan and tilt axis angle with the virtual joystick, switch modes, set motor power/ camera parameters/follow speed, set other functions, parameters, and update firmware.

7.2 Function introduction of Feiyu SCORP App

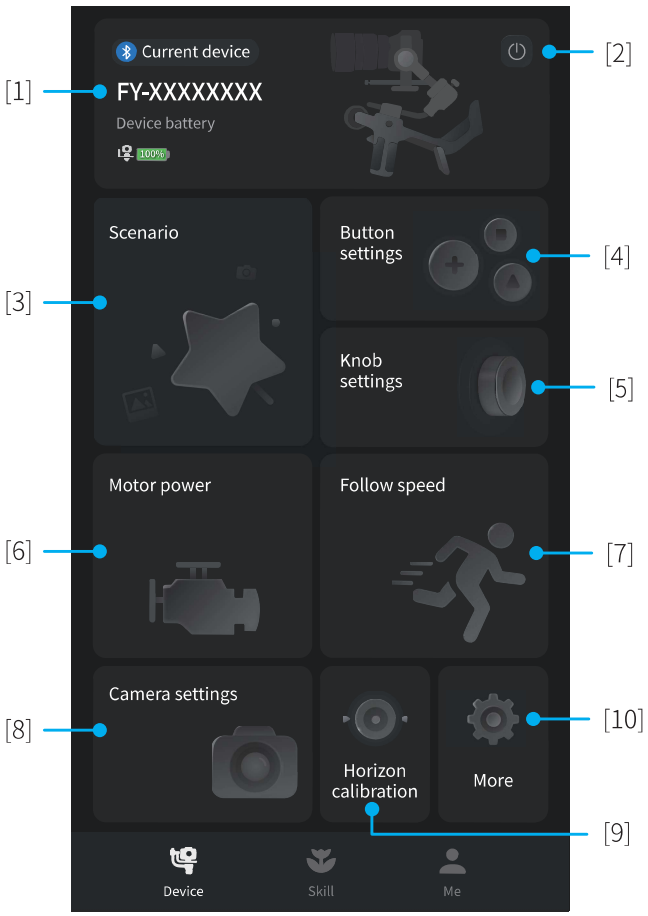

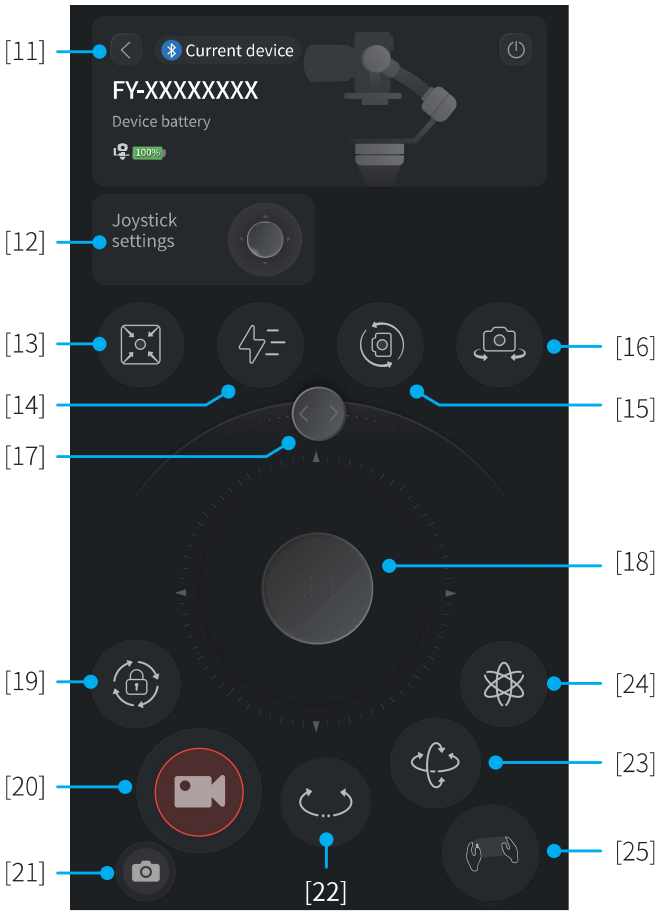

[1] Gimbal control access

Display the product name and device battery of current connecting gimbal, tap to enter gimbal operation interface, which allows user to use virtual joystick to control gimbal, switch follow modes, recenter gimbal, adjust horizontal angle manually.
When not connected to gimbal, prompt user to connect with gimbal.

[2] Disconnect device

Tap to disconnect current connecting device.

[3] Scenarios

Provide auto rotation (can be used to achieve the image rotating scene which been used frequently in movie Inception), panorama, timelapse (Motionlapse/Static timelapse/Hyperlapse) , track video and other usage scenarios for user.

[4] Button settings

Set the function when press and hold the trigger button.

[5] Knob settings

Set the control object for multifunction knob, can be set as control axes, control electronic focus, control focus motor.
Set damp, speed, smooth and sound for multifunction knob in "More".

[6] Motor power settings

Adjust tilt, roll, pan axes motor power manually or use auto tune function to tune the motor power automatically (Recommended).

⚠ Please set motor power first after power on gimbal for the first time or after change a new camera/lens.

[7] Follow speed

Select different preset gimbal follow speed profiles: Slow/Med/Fast, or custom follow speed and dead zone.

[8] Camera settings

Can set camera aperture, shutter speed and ISO parameters after connecting with camera.

[9] Horizon calibration

Calibrate the gimbal with the auto calibration function(Recommended) or adjust it manually (When not in FPV or FFW mode).

[10] More

Set boot silent, disable selfie, manual lock, check firmware information and update firmware, restore the default settings.

[11] Back

Tap to return to home page.

[12] Joystick settings

Can set the joystick speed for controlling pan/tilt axis, and joystick as pan axis/tilt axis inverted.

[13] Recenter

Tap to recenter the gimbal.

[14] Flash follow(FFW)

Tap to enter Flash follow.

[15] Portrait mode

Tap to enter portrait mode.

[16] Selfie mode

Tap to enter selfie mode.

[17] Adjust horizontal angle

Slide the slider to control roll axis to adjust the current horizontal angle.

[18] Virtual joystick

Use virtual joystick to control pan and tilt axis.

[19] Lock mode

Tap to enter lock mode.

[20] Shutter

Tap to take photo in photo mode.
Tap to start/stop recording in video mode.

[21] Switch between photo/video mode

Tap to switch between switch between photo/video mode

[22] Pan follow (PF)

Tap to enter pan follow (PF) mode.

[23] Pan and tilt follow (PTF)
Tap to enter pan and tilt follow (PTF) mode.

[24] FPV
Tap to enter FPV mode.

[25] Motion sensing mode
Tap to enter motion sensing mode which can control the pan and tilt axis to follow the movement of smartphone, can not switch follow modes in motion sensing mode (PF/PTF/FPV/Lock).

7.3 Function introduction of Feiyu ON App

Shooting Interface

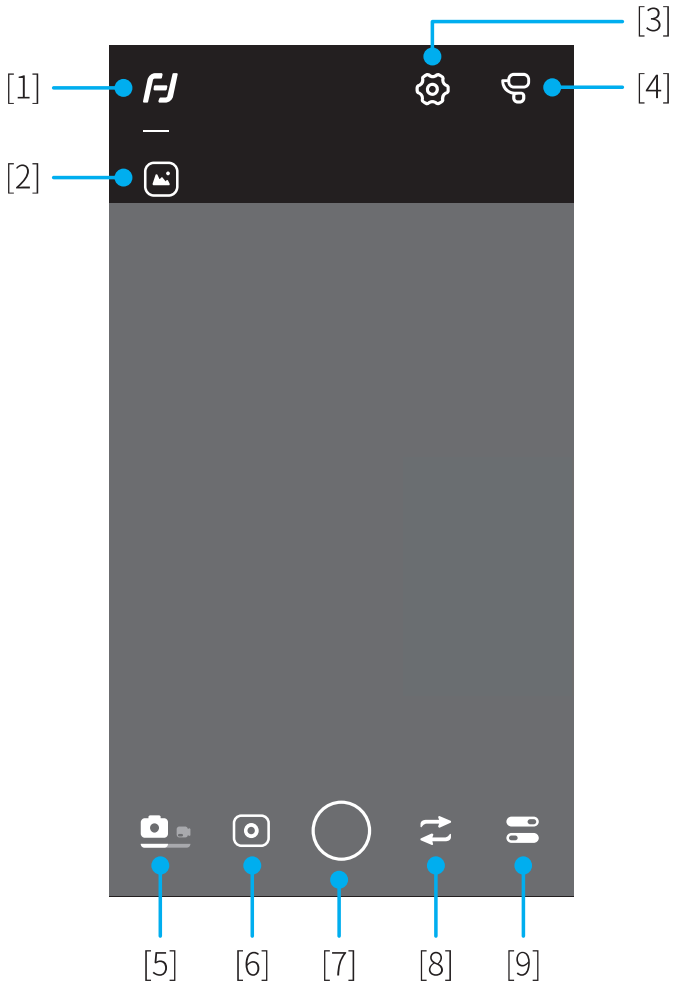

Control Interface

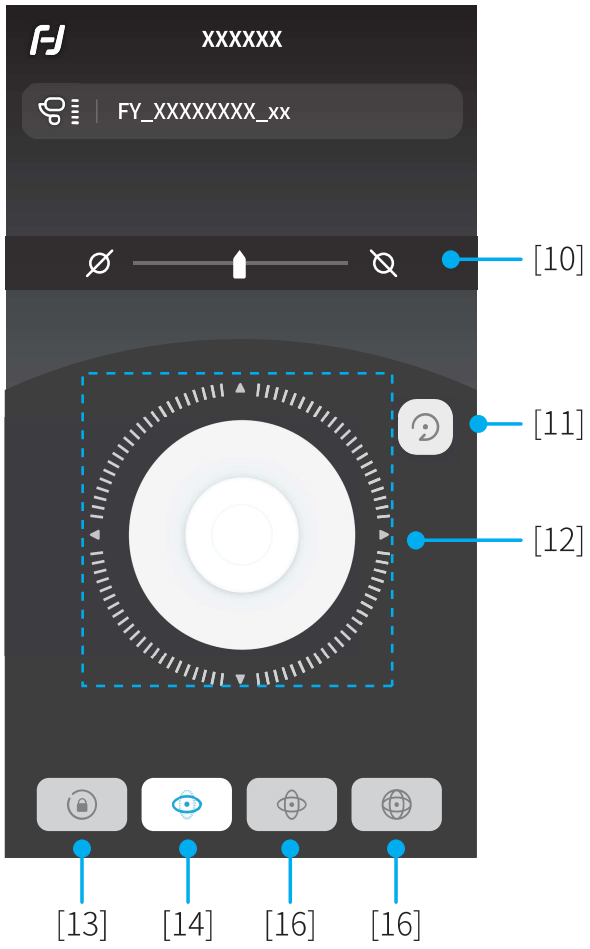

[1] Back

Tap to return to previous menu.

[2] Album

Tap to enter album.

[3] Gimbal control

Tap to enter gimbal remote control interface, which allows user to use virtual joystick to control gimbal and switch follow modes.

[4] Gimbal information

Tap to check current connecting gimbal and it’ s battery, user can also update firmwares for gimbal.

[5] Switch between photo/video mode

Tap to switch between switch between photo/video mode.

[6] Switch usage scenarios

In photo mode: Free panorama /Ultra-wide angle / 180° panorama / 360° panorama / Normal photo / Overlapping image / Light rail mode / Quick panorama.
In video mode: Static timelapse / Track timelapse / Dolly zoom / Normal video / Light rail video / Kuaishou Live.

[7] Shutter

Tap to take photo in photo mode.
Tap to start/stop recording in video mode.

[8] Switch between front and back cameras

Tap to switch between front and back cameras.

[9] More

Support photo timer, beauty, flash, auxiliary line, peak assist, overexposure tips, filter, AI and gesture settings.

[10] Horizontal angle

Slide the slider to control roll axis to adjust the horizontal angle.

[11] Recenter

Tap to recenter the gimbal.

[12] Virtual joystick

Use virtual joystick to control pan and tilt axis.

[13] Lock Mode

Tap to enter lock mode.

[14] Pan follow (PF)

Tap to enter pan follow (PF) mode.

[15] Pan and tilt follow (PTF)

Tap to enter pan and tilt follow (PTF) mode.

[16] FPV

Tap to enter FPV (All follow) mode.

8. Operation

8.1 Button operation

8.1.1 Power button

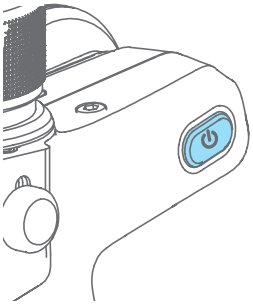

Long press: Power on/off
Single tap: Wake up
Double tap: Enter sleep mode

8.1.2 Mode button

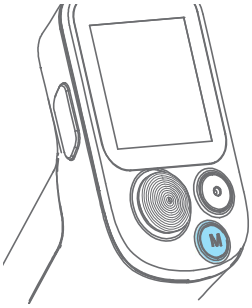

Single tap: Pan follow/Lock mode (Switch in turn)
Double tap: PTF
Triple tap: FPV

8.1.3 Trigger button

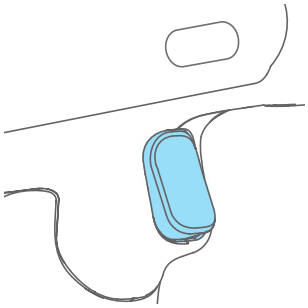

Double tap: Recenter
Triple tap: Enter/Exit selfie mode (Pan axis turn 180°)
Press and hold: PTF (Release to exit)

You can custom the function via App

8.1.4 Joystick

Push: Control the movement of the tilt and pan axes.

8.1.5 Shutter button*

Press half way: Focus
Single tap (Fully): Start/stop recording
Long press (Fully): Take photo

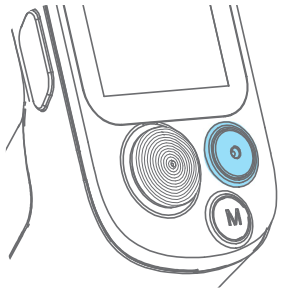

8.1.6 FPV button

Single tap: Enter/Exit FPV mode

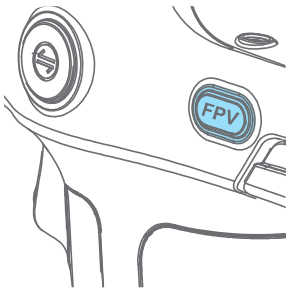

8.1.7 F1 button

Double tap: Enter/Exit portrait mode

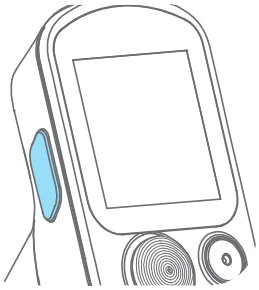

8.1.8 F2 button

Single tap:
(1) Lock/Unlock screen (In home page)
(2) Return to home page (In other pages)

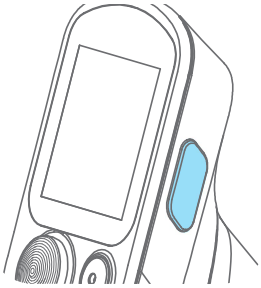

8.1.9 Knob function switching button

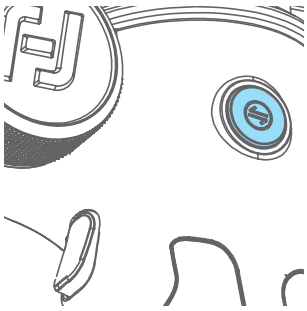

Single tap: Switch the control object while controlling the movement of the 3 axes (Tilt/Pan/Roll)

Long press: Switch the control options of Multifunction knob in turn (The movement of the 3 axes/Electronic focus/Focus motor)

8.1.10 Multifunction knob

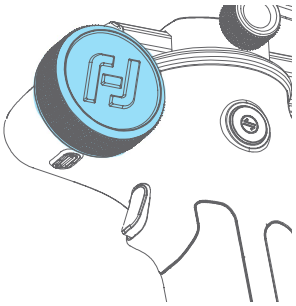

Turn:

(1) Control the movement of the roll, tilt and pan axes.
(2) Control focus.
(3) Contol focus motor.
(4) Adjust the parameter in the touch screen.

Set current control option as option (1) or (2) or (3) through long press the knob function switching button or swipe up in home page.

*Need to connect with camera. Refer to the camera compatibility list on: https://www.feiyu-tech.cn/feiyu-scorp-mini/

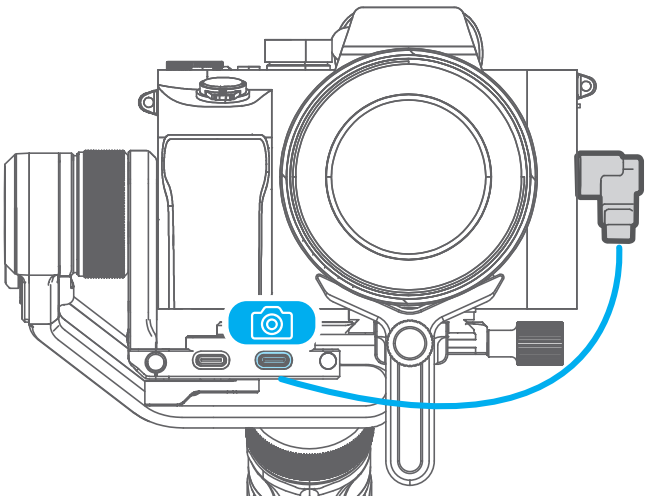

Connect camera with shutter cable

8.2 Touch screen operation

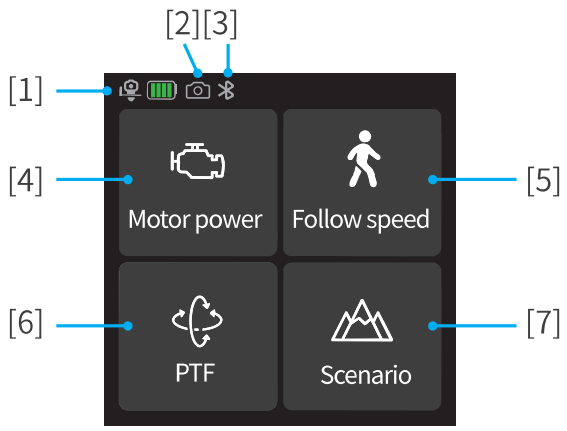

Home page

[1] Current battery level

Show the current battery level of gimbal.

[2] Camera connection

Icon appears after camera connect to the gimbal successfully. The icon won’t be shown if camera doesn’t connect to gimbal.

[3] Bluetooth connection

Icon appears after Bluetooth is connecting. And the icon won’t be shown if Bluetooth disconnect.

[4] Motor power

Use auto tune to adjust the motor power automatically, or adjust motor power for each axis manually.

[5] Follow speed

Users can select different gimbal follow speed profiles, or customize follow speed.

[6] Follow mode

Select gimbal follow mode.

PF: Pan follow, only the pan axis follows the movement of user's hand.

PTF: Pan and tilt follow, where both the pan and tilt axes follow the movement of user's hand, but roll axis does not.

FPV: Pan, tilt and roll follow, where all 3 axes follow the movement of user's hand.

Lock: All 3 axes do not follow the movement of user's hand, gimbal keeps the direction of the camera fixed.

FFW: Flash follow, where all 3 axes follow the movement of user's hand in high follow speed.

[7] Scenario

Select gimbal usage scenario (timlapse, auto rotation, panorama, portrait mode, selfie mode, track video, etc.)

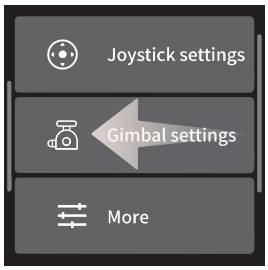

Swipe from right to left

Joystick, gimbal and more settings

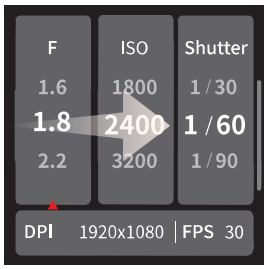

Swipe from left to right

Shooting parameters settings

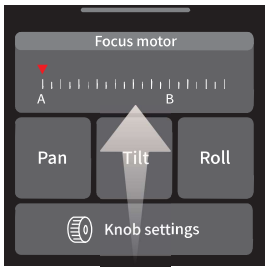

Swipe up

Multifunction knob settings

- Return to previous menu: Swipe to right

Swipe from right to left

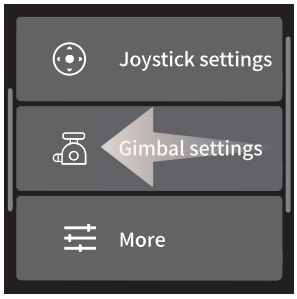

- Joystick settings

Set the joystick speed for controlling pan/tilt axis, provide joystick direction switch.

- Gimbal settings

Including disable selfie, manual lock, and horizon calibration settings.

- More

Silent switch, select language, restore the default settings, check version information.

Swipe from left to right

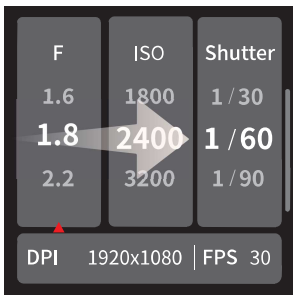

- Camera settings

Set aperture, ISO, shutter speed and show current resolution, fps after connecting with camera.

Swipe up

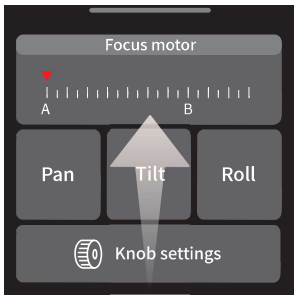

- Knob settings

Set the control object for multifunction knob, can be set as control axes, control electronic focus, control focus motor.

Set damp, speed, smooth and sound for multifunction knob in "Knob settings".

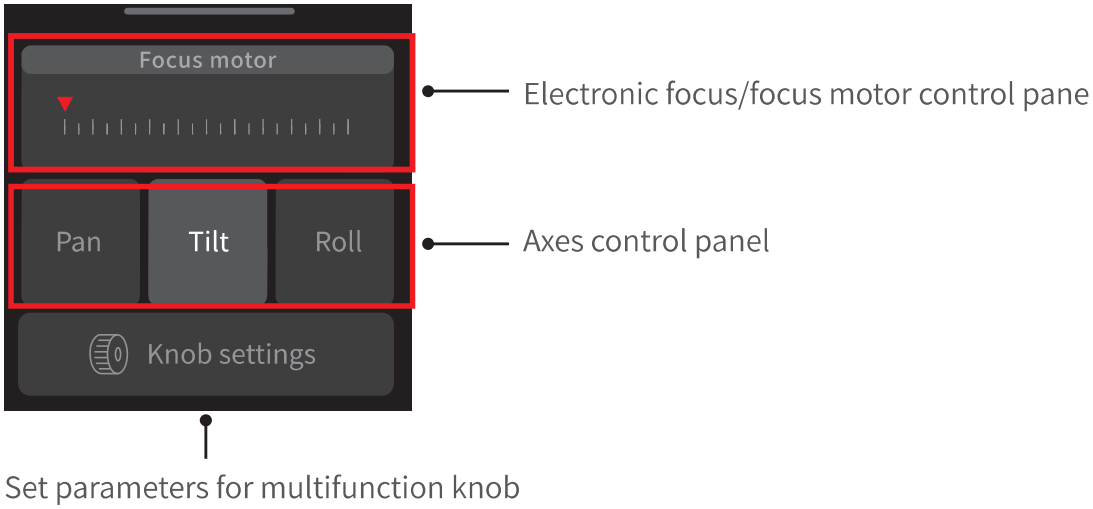

8.3 Function operation

8.3.1 Motor power settings

⚠ Please set motor power first after powering on gimbal for the first time or after changing a new camera/lens.

Auto tune: Gimbal auto tune the motor power according to the load.

Adjust motor power manually: Adjust the motor power for each axis manually according to the load.

Tips: If the gimbal is vibrating in high frequency, it means the motor power is too strong. If the gimbal is shaking in low frequency and large amplitude, it means the motor power is too weak.

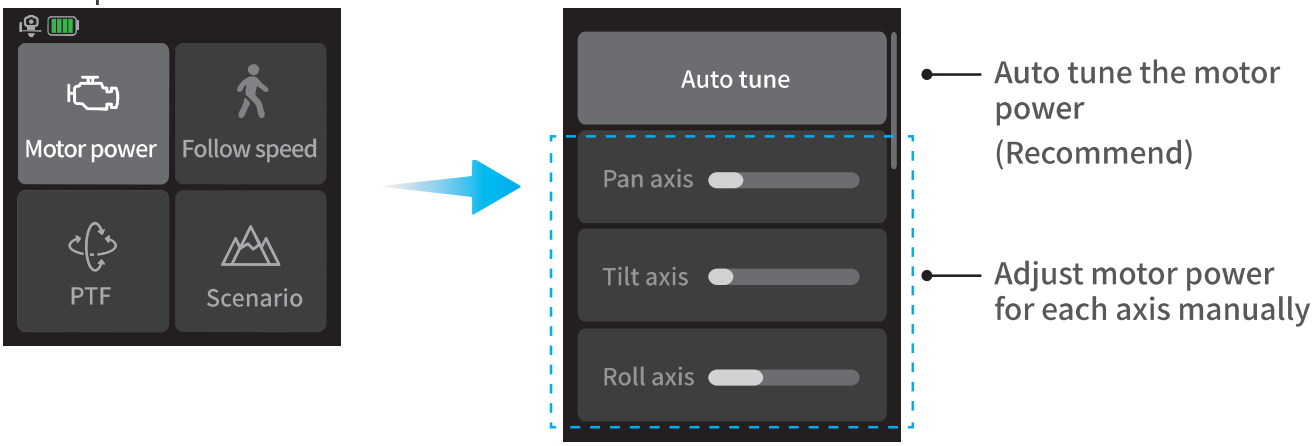

8.3.2 Follow speed settings

Tap "Follow speed" in home page, and select different preset gimbal follow speed profiles: Slow/Med/Fast, or custom follow speed and dead zone.

8.3.3 Follow mode settings

Tap the lower left icon in home page to select follow modes.

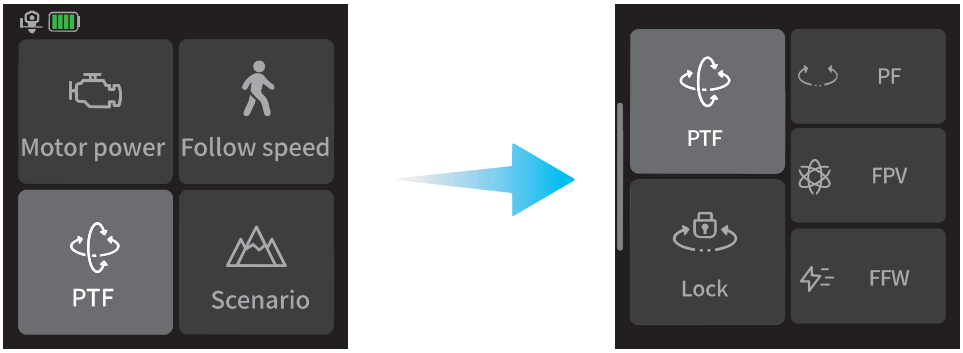

Follow mode

- **PF:** Pan follow, only the pan axis follows the movement of user's hand.
- **PTF:** Pan and tilt follow, where both the pan and tilt axes follow the movement of user's hand, but roll axis does not.
- **FPV:** Pan, tilt and roll follow, where all 3 axes follow the movement of user's hand.
- **Lock:** All 3 axes do not follow the movement of user's hand, gimbal keeps the direction of the camera fixed.
- **FFW:** Flash follow, where all 3 axes follow the movement of user's hand in high follow speed.

8.3.4 Timelapse

Select “Scenario” in home page, then select “Timelapse”. Select motionlapse/static timelapse/hyperlapse according to what you need, and follow the tips to set the parameters to start shooting.

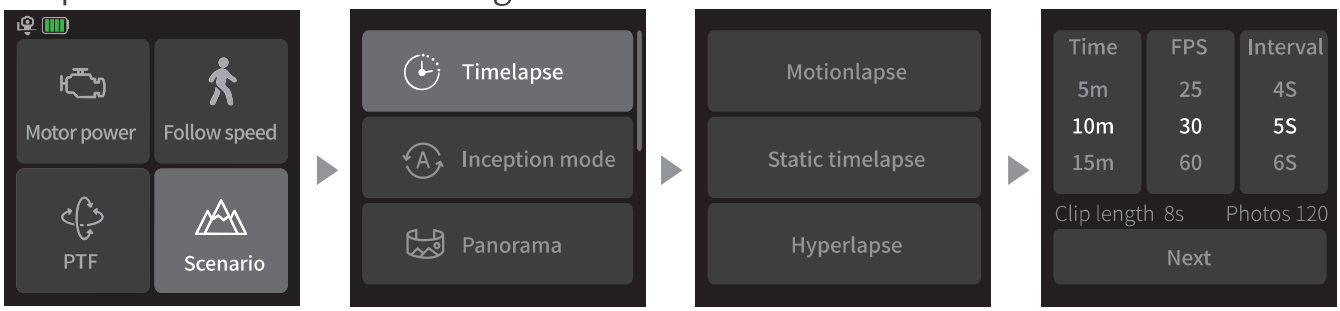

Motionlapse: Shoot timelapse photography according to the waypoints which has been set.
Static timelapse: Shoot timelapse photography with a fixed shooting angle.
Hyperlapse: Shoot timelapse photography while moving.

8.3.5 Auto rotation

Can be used to achieve the image rotating scene which been used frequently in movie Inception.
Select “Scenario” in home page, then select “Auto rotation”. The tilt axis will rotate 90° counterclockwise to make the camera pointing upward. Gimbal start to rotate after setting the rotation speed, direction, and rotational number.

Exit: Swipe from left to right to return to previous menu to exit auto rotation mode.

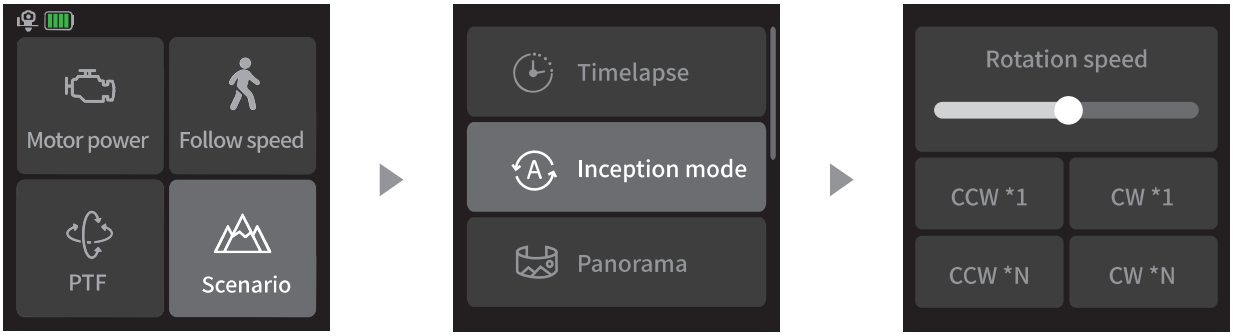

8.3.6 Panorama

Select “Scenario” in home page, then select “Panorama”. Choose a panorama

mode to start shooting a series of interconnecting still images. Users can then generate a panorama using image processing software.

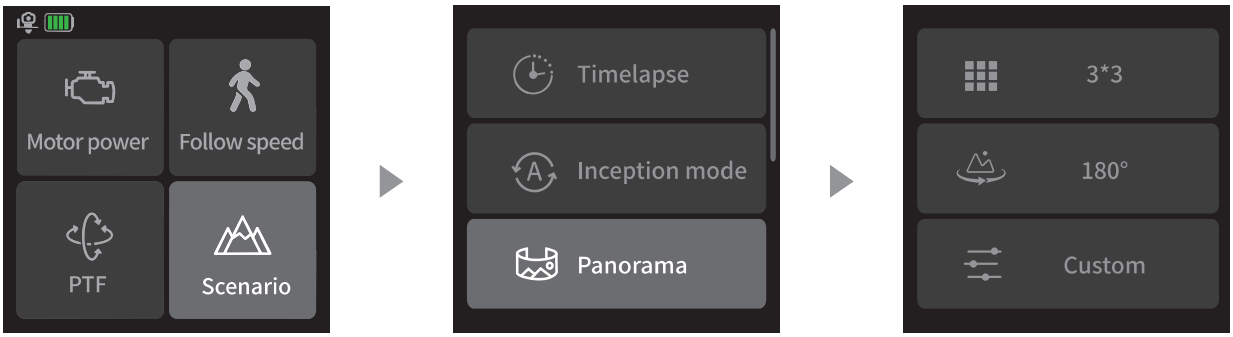

3*3: Take 3 images above in every three layers (9 images in total).
180° : Take 4 lateral images.
Custom: Custom the shooting angle for pan/tilt axis, focal length, overlap and interval parameters to take panorama photos.

8.3.7 Portrait mode

Select "Scenario" in home page, then select "Portrait mode". The tilt and pan axis will rotate 90° counterclockwise to make the camera pointing upward.

Hold the handle to make the lens horizontal to the ground to shoot in portrait mode.

Exit: Tap the icon at the bottom of the screen to exit.

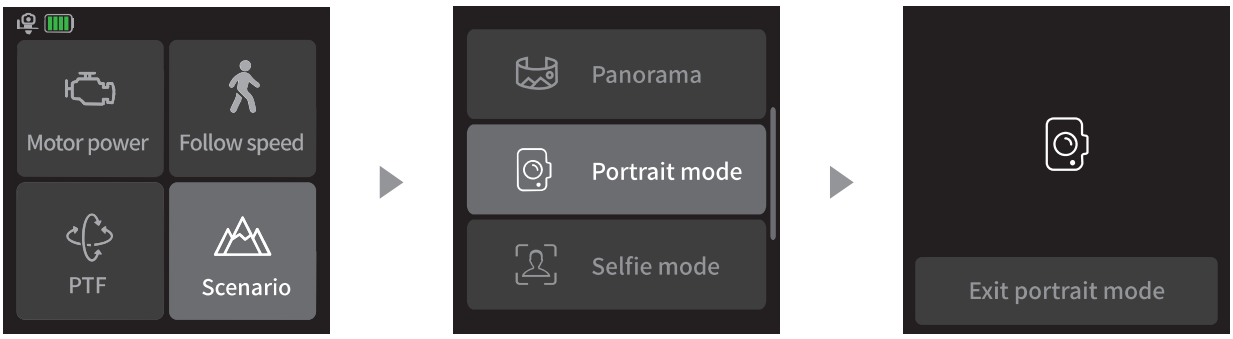

8.3.8 Selfie mode

Select "Scenario" in home page, then select "Selfie mode". Gimbal turn 180° horizontally so that the camera faces you.

Exit: Tap the icon at the bottom of the screen to exit.

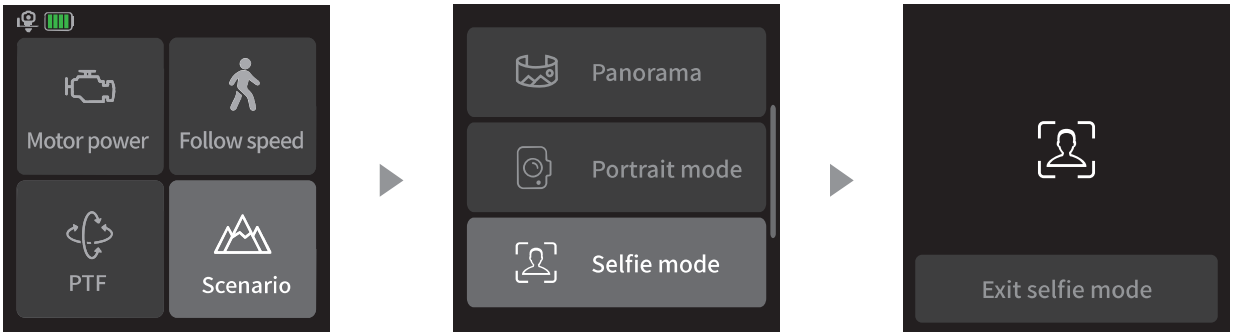

Disable selfie: Swipe from left to right in home page, then select "Gimbal settings", enable the disable selfie switch, then the selfie mode will not be entered if the trigger button is tapped three times.

8.3.9 Track video

Select "Scenario" in home page, then select "Track video", capture video with up to 10 waypoints.

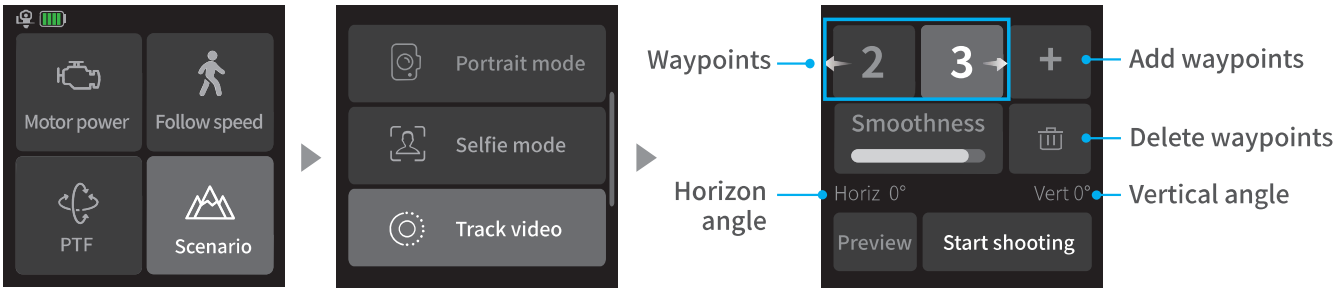

Use joystick or manually move camera to desired position, tap "+" icon to confirm the waypoint, repeat to add another waypoint. Track video is designed to capture video with up to 10 waypoints.

Select a waypoint number to check the position for this waypoint quickly, and tap "🗑" icon to delete it.
After setting up the smoothness, tap "Start shooting" to start shooting.

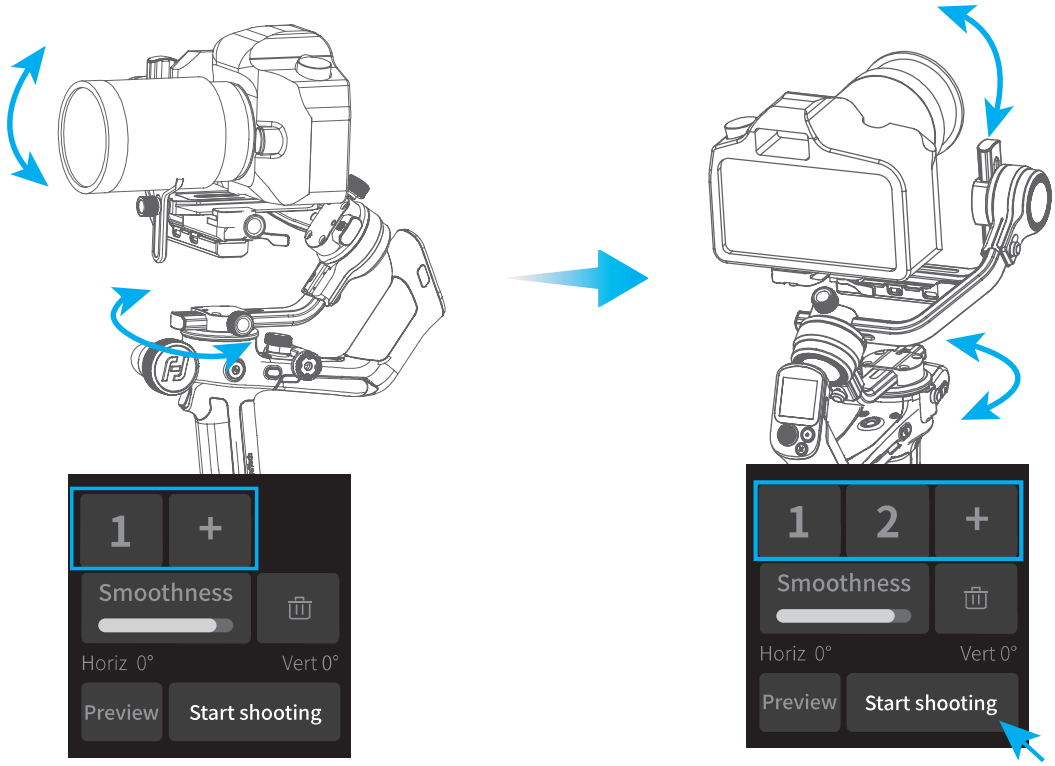

The shooting progress will show up on the screen, if need to stop it midway, tap "Stop shooting" to stop it.
After the shooting complete, tap "Confirm and return" to exit.

8.4 Control ports

There is a camera control port and extension port on the fixed plate, to control camera and other extension devices, such as focus motor, etc.

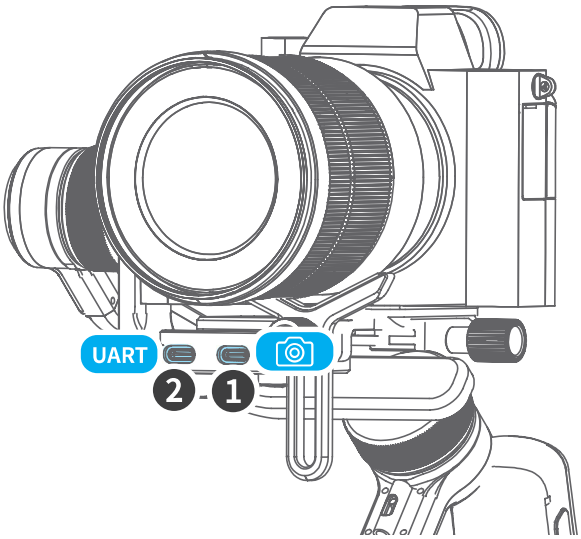

① Camera control port
② Extension port (connect focus motor and etc.)

9. Specifications

Product name	Feiyu SCORP-Mini 3-Axis Camera Handheld Stabilizer
Product model	Feiyu-F1
Max. Tilt Range	+170° ~ -45°
Max. Roll Range	+40° ~ -40°
Max. Pan Range	360°
Weight	About 787g
Payload Capability	About 1200g (Well-balanced)
Battery life	13 Hours
Battery	2500mAh
Operating Voltage	6.8V-8.4V
Compatible Cameras	Mirrorless camera and pocket camera (Sony, Canon, Nikon, Panasonic,etc. Please download the detailed manual for the specific compatible camera and lens) , action camera like GoPro, and smartphone (Width: 52mm~82mm, thickness: ＜ 8.9mm)

Accessories

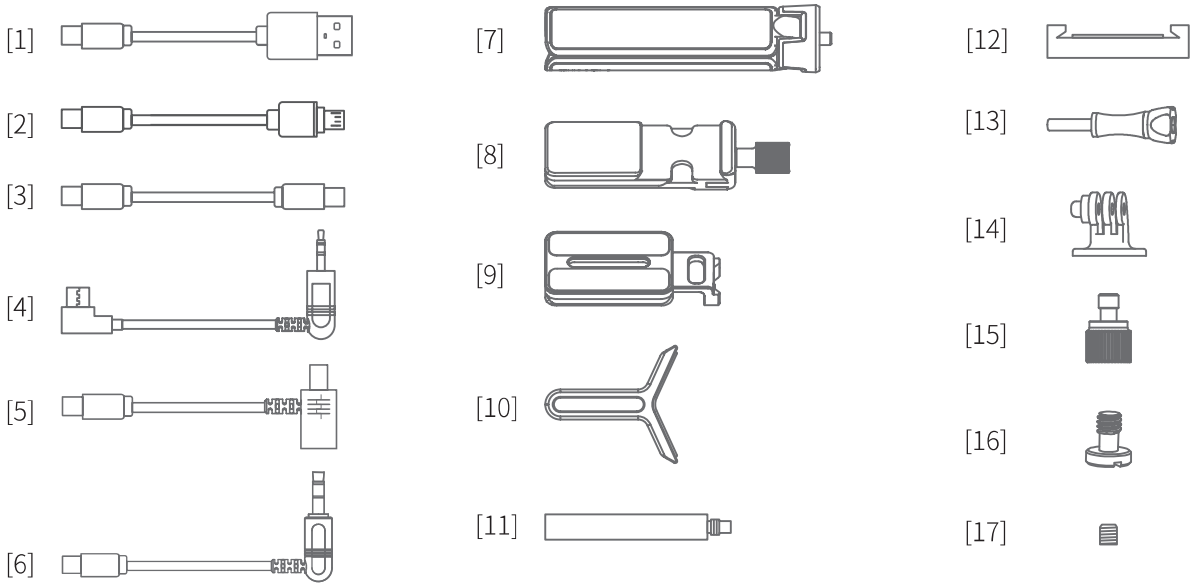

[1] USB 2.0 to Type-C
[2] Type-C to Micro
[3] Type-C to Type-C
[4] Type-C to TRS2.5
[5] Type-C to Multi Sony shutter cable
[6] Type-C to 2.5mm Panasonic shutter cable (DC2.5mm)
[7] Tripod
[8] Fixed plate slider
[9] Quick release plate
[10] Lens holder
[11] Focus motor support rod
[12] Smartphone holder
[13] Long thumb screw
[14] GoPro adapter
[15] Lens holder screw
[16] Camera fixed screw
[17] Fixed screw for support rod

Notice

1. Make sure motor spinning is not blocked by external force when the product is power on.
2. The product DO NOT contact water or other liquid if the product is not mark waterproof or splash-proof. Waterproof and splash-proof product DO NOT contact sea water or other corrosive liquid.
3. DO NOT disassembly the product except marked detachable. It need send to FeiyuTech after-sales or authorized service center to fix it if you accidently disassembly and cause abnormal work. The relevant costs are borne by user.
4. Prolonged continuous operation may cause the product surface temperature to rise, please operate carefully.
5. DO NOT drop or strike the product. If the product is abnormal, contact Feiyu After-sales support.

Storage and Maintenance

1. Keep the product out of the reach of children and pets.
2. DO NOT leave the product near heat sources such as a furnace or heater. DO NOT leave the product inside of a vehicle on hot days.
3. Please storage the product in dry environment.
4. DO NOT overcharge or overuse the battery, otherwise it will cause damage to the battery core. If does not use the product for a long time, please charge it at least once within one month.
5. Never use the product when the temperature is too high or too low.

FCC regulatory conformance:

This device complies with Part 15 of the FCC Rules. Operation is subject to the following two conditions:
(1) This device may not cause harmful interference.
(2) This device must accept any interference received, including interference that may cause undesired operation.

NOTE

This equipment has been tested and found to comply with the limits for a Class B digital device, pursuant to part 15 of the FCC Rules. These limits are designed to provide reasonable protection against harmful interference in a residential installation.
This equipment generates uses and can radiate radio frequency energy and, if not installed and used in accordance with the instructions, may cause harmful interference to radio communications. However, there is no guarantee that interference will not occur in a particular installation. If this equipment does cause harmful interference to radio or television reception, which can be determined by turning the equipment off and on, the user is encouraged to try to correct the interference by one or more of the following measures:
- Reorient or relocate the receiving antenna.
- Increase the separation between the equipment and receiver.
-Connect the equipment into an outlet on a circuit different from that to which the receiver is connected.
-Consult the dealer or an experienced radio/TV technician for help.

NOTE

The manufacturer is not responsible for any radio or TV interference caused by unauthorized modifications to this equipment. Such modifications could void the user’ s authority to operate the equipment.

RF Exposure

This equipment complies with FCC radiation exposure limits set forth for an uncontrolled environment.

Website Facebook Youtube Twitter Instagram

This document is subject to change without notice. If you have any questions about this document, please contact us by the following ways.

Manufactured by: Guilin Feiyu Technology Incorporated Company
Website: www.feiyu-tech.com
E-mail: support@feiyu-tech.com
Tel: +86 773-2320865