NightShot®

OWNER'S MANUAL

NIGHT VISION RIFLE SCOPE

by

Night Owl Optics®

www.nightowloptics.com • 1-800-444-5994

INDEX

Product overview 3
Installing the batteries 4
Mounting the Rifle Scope 5
Operation 6
Windage and Elevation adjustments 7-8
Infrared Illumination 8
Focusing 9
Power display & battery life 10
Specifications 10-11
Range 11

One-Year Limited Warranty

The NightShot Rifle Scope is warranted against defects in materials and workmanship under normal use for one year from the date of purchase to the original owner. Damage due to neglect, accidental damage or misuse of this product is not covered under this warranty. Decisions regarding abuse or misuse of the product are made solely at the discretion of the manufacturer.
Proof of Purchase is required to make a claim under this warranty.
Liability under this warranty is limited to replacing or repairing, at our option, the NightShot returned, shipping cost prepaid, to Night Owl Optics.
To return your scope for service, please first contact us for a Return Authorization (RA) Number.

NOTICE TO CUSTOMERS OUTSIDE THE U.S.A.
This warranty may vary in other countries; check with your distributor for details.
Warranty does not cover shipping costs to or from the U.S.A.

Night Owl Optics®
1120 Alza Drive, El Paso, TX 79907 • 800-444-5994
Warranty Service: service@nightowloptics.com

PRODUCT OVERVIEW

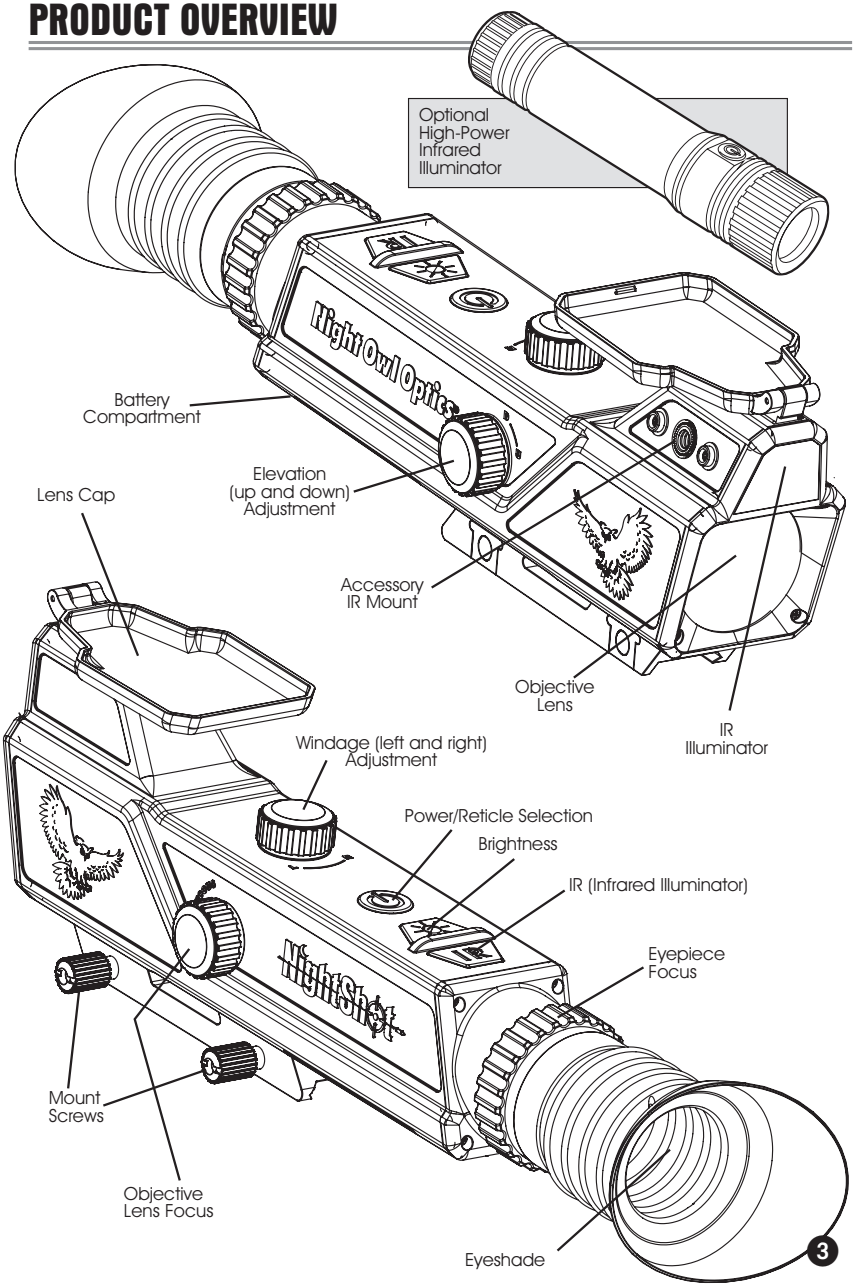

INSTALLING THE BATTERIES

BOTTOM VIEW

CAUTION:
The battery door is designed for a tight fit to avoid battery bounce during recoil.

1. To install door, insert the two tabs into position. Press firmly to seat the door flush. Then tighten the thumbscrew.
2. Remove door by rotating thumbscrew counterclockwise five turns. The thumbscrew is attached to door and stays attached.

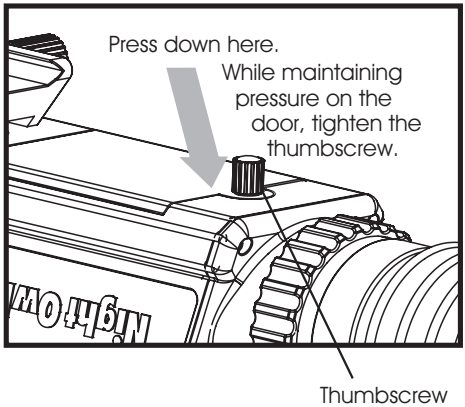

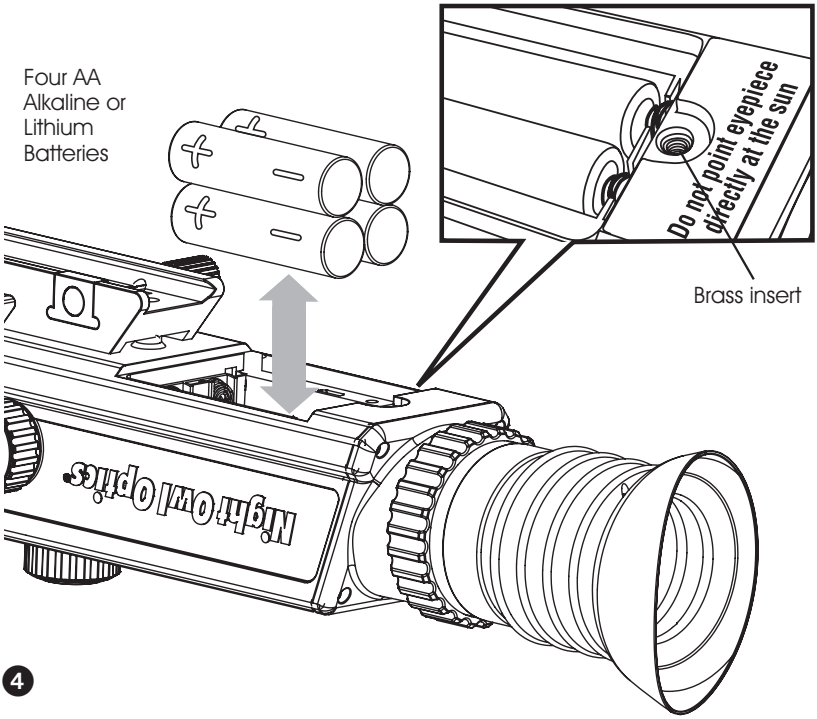

MOUNTING THE RIFLE SCOPE (Weaver or Picatinny compatible)

It is recommend that you have a qualified gunsmith install the mounting rail (Picatinny or Weaver rail) on your rifle. However if you choose to self-install your mounting rail, use a high quality mounting rail and carefully follow the instructions that come with it.

Note that there are two different cross-bolts on the scope mount. The cross-bolt with the full diameter locates the scope on the rail and prevents it from moving. The flat cross-bolt tightens the mount to the rail, but does not locate into a slot on the rail. These two cross-bolts are interchangeable and can be reversed as required to fit to your particular rail. Picatinny rails have evenly spaced cross-cuts and therefore should not necessitate moving the cross-bolts. On Weaver-style rails the location of, and spacing between, cross-cuts can vary and thus may require reversing the cross-bolts. In mounting the scope to your rail, adjust the scope to suit your natural shooting position. The scope should sit at a safe distance away from your eye, in a comfortable position to optimize sighting and shooting. The eye relief to the lens is approximately 2.7 inches (7 cm).

Note: There is a flat spot on one of the cross-bolts. These can be reversed to work in different mounts particularly "weaver mounts" where the spacing between the slots varies.

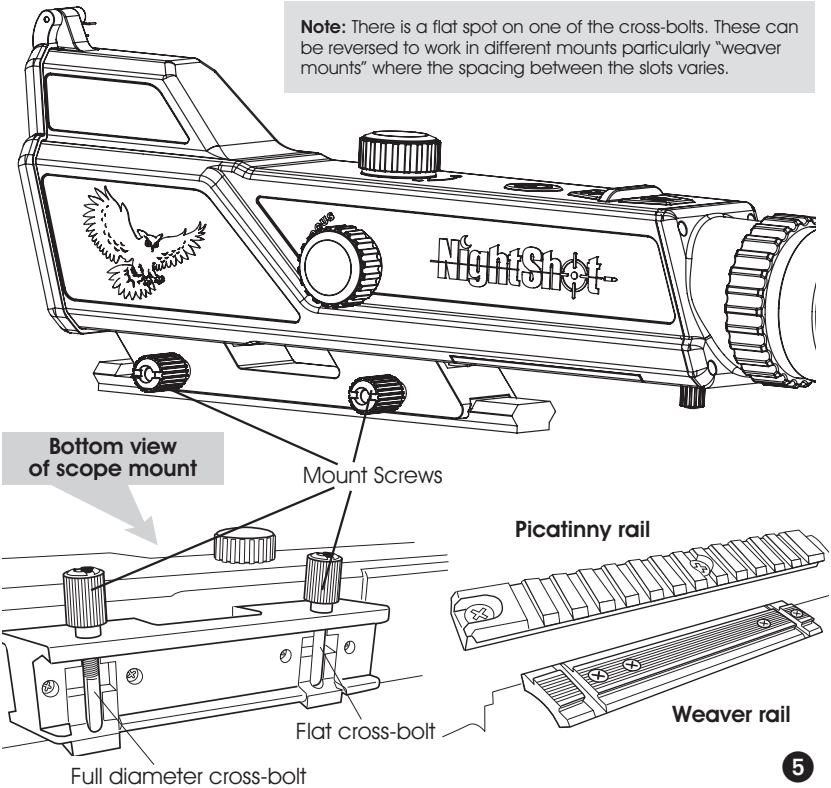

OPERATION

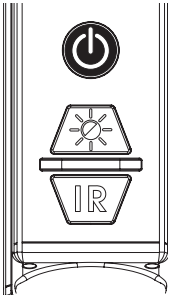

1. Power On/Off

ON: Press and hold the power button for 2-3 seconds
OFF: Press and hold the power button for 2-3 seconds

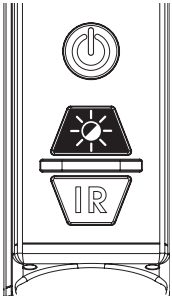

2. Brightness control

Press the Brightness control button. The Brightness will be adjusted in the following cycle (the symbol will be displayed on the screen, and will disappear after 3 seconds).

Low
Medium (default)
High

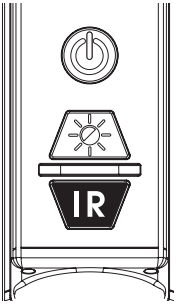

3. IR intensity control

Press the IR control button. The IR intensity will be adjusted in the following cycle (this symbol will remain on the screen):

IR Low
IR Medium
IR High (default)
IR Off

Note: if sighting in during daylight, remember to turn off IR to conserve battery power.

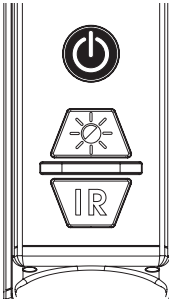

4. Reticle selection

Quick-pressing the power button cycles between 3 different reticle types. Each of the 3 reticle types can be configured in white or black, allowing the shooter to adjust the reticle type and color to best suit the current shooting environment.

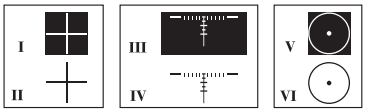

WINDAGE and ELEVATION ADJUSTMENTS

Remove cover cap. Rotate in the U or D and/or L or R direction. One click equals approximately 1/4" adjustment @ 50yds. **Note:** the number at the top/bottom and left/right of the screen shows adjustment settings. Replace cap to secure settings.

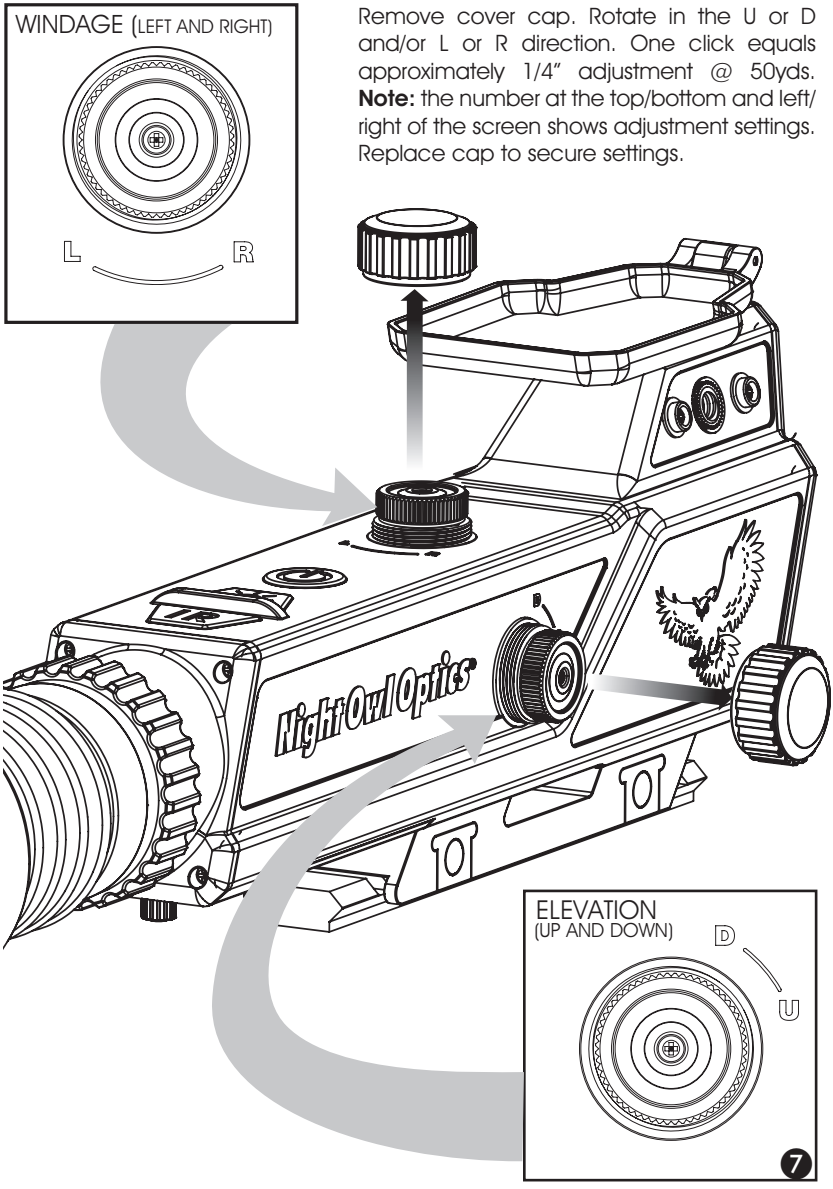

WINDAGE and ELEVATION ADJUSTMENTS

Bore Sighting:

Bore sighting is the procedure required to align the scope with the rifle bore. This can be done with the assistance of a bore sight device or, if one is not available, this can be accomplished as follows:

1. Lock or mount the gun in a stationary device so it cannot move. Remove the bolt and look through the barrel at a target that is set at 50 yards or further. Identify the center point spot inside the barrel window on the target.
2. Now look through the scope and set your reticle to the same center point spot on the target by utilizing the scope's windage and elevation adjustments.
3. After bore sighting the firearm, it is neccessary to perform a final sight-in at the range to insure accuracy. **Important:** make final sight-in adjustments with the ammunition you intend to use.
4. *Take note of the numerical windage and elevation values.* This is your new center-point for this scope on this rifle. If you remove the scope from this rifle and then later reinstall, reset the windage and elevation to these values.

WARNING: Do not point eyepiece directly at sun. Prolonged exposure can damage optic.

Zeroing:

Final zeroing should be done at the distance where you do most of your shooting. For most hunters using night vision, this will be in the 50-100 yard range.

Windage and Elevation

To adjust windage and elevation on the NightShot Rifle Scope:

1. Remove the protective caps from the windage and elevation adjustment knobs.
2. On the windage adjustment, Left and Right are indicated by L and R. On the elevation adjustment, Up and Down adjustments are indicated by U and D.
3. To make adjustments to the point of impact (POI), click the knob in the required direction, taking into account that 1 click equals 1/4 inch at 50 yards. For example, if it were necessary to adjust POI by 1 inch to the right, you would click the windage knob towards "R" 4 times to equal 1 inch.
4. Once complete, re-install the protective caps.

INFRARED ILLUMINATION

The NightShot is equipped with an active infrared emitter; it emits an invisible beam of near-infrared light. The beam of light exiting the emitter is not visible to human or animal eyes but is detected by the NightShot sensor. Also notice that while the light emitting from the IR is invisible, the diode does glow inside the emitter and can be detected from a distance. Extensive testing concludes that animals are not influenced by the glow of the infrared emitter.

Do not look directly into the IR emitter at close range. The IR, while not visible, is still a bright light. As with any bright light, avoid pointing directly into your eye.

Keep this device out of the reach of children.

FOCUSING

EYEPIECE FOCUS - INITIAL SET UP

With the lens cap closed, set eyepiece focus to your individual eyesight by pressing any button to display a graphic on the screen. Adjust eyepiece until the graphic comes into sharp focus on the display.

NOTE - with cap closed the black reticle cannot be seen.

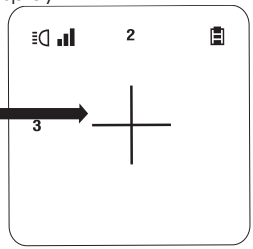

Lens Cap must be closed for Eyepiece focus set-up

Lens Cap

Eyepiece focus

Set eyepiece focus <u>once only</u>. Do not re-adjust unless a different shooter uses the scope.

OBJECTIVE LENS FOCUS

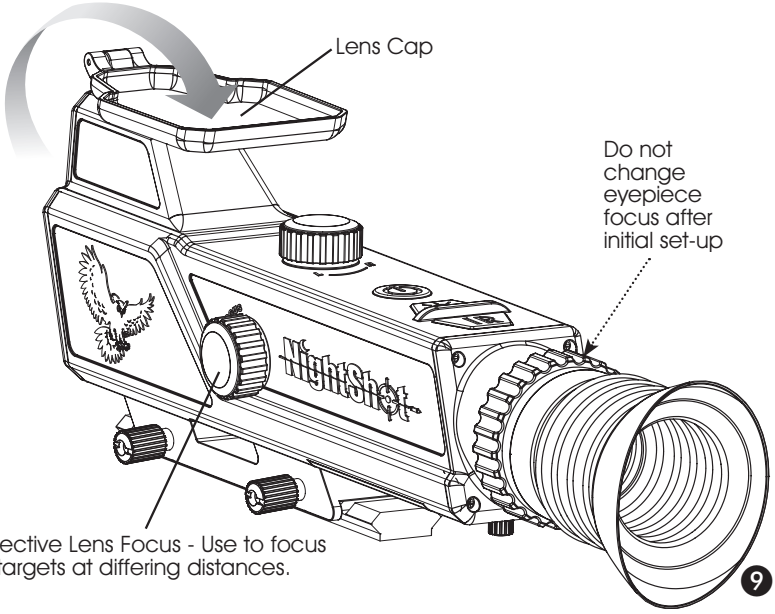

POWER DISPLAY & BATTERY LIFE

This device uses 4 x AA alkaline or lithium batteries. When the battery voltage is too low, the device will not operate.
The battery indicator will flash when the battery voltage is low.

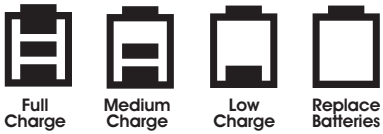

Expect approximately 3 hours of battery life under normal use with alkaline batteries. The use of quality lithium-ion batteries is highly recommended as lithium-ion batteries will significantly increase battery life. **Note:** the IR uses the majority of the battery power, so if the IR is left on, the battery life decreases significantly. If the scope is left on, consider setting IR to "Off" or "Low", then switch to a "High" setting IR intensity when targeting.

Expected operating cycle on one set of alkaline batteries:

2 hours with IR on High.
5 hours with IR on Low.

Device will not turn off automatically. Therefore, to conserve battery power consider turning the IR to "Low" or "Off" when extra illumination is not required.

SPECIFICATIONS

Electronic Viewing System	
Resolution	640 X 480 pixels (VGA)
Effective Spectral Range	400nm to 900nm
Frame Rate	30 fps (frames per second)
Illumination	
IR LED (collimated)	15 deg. 850nm, 1W
Eyepiece	
Eye Relief	68.50mm (2.7 in)
Entrance Pupil	9.0 mm (.35 in)
Diopter Adjustment	+4D ~ -4D
Objective Lens	
Focal Length	52 mm (2.05 in)
Field of View	5.6 deg.
Aperture	40mm Dia., (1.57 in) F:1.3
Focusing Distance	3M to Infinity - (10ft to infinity)

SPECIFICATIONS (continued)

Scope

Effective Magnification	2.7X
Weight without batteries	500 g (1.10 lb)
Dimensions	335 X 69 X 102 mm approx.
	13.19 x 2.71 X 4.01 in
Power	4 pieces, AA-type Battery

RANGE

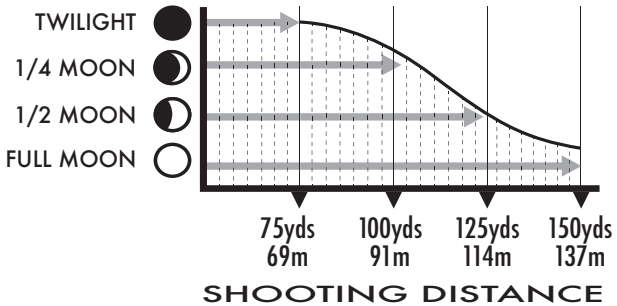

The ability to see at greater distances is relative to the amount of available ambient light.

WARNING! DO NOT POINT EYEPIECE DIRECTLY AT SUN

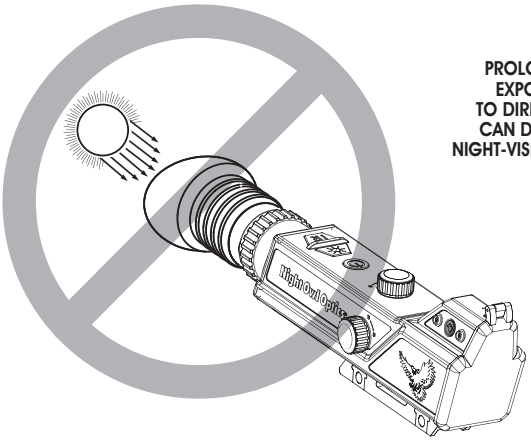

PROLONGED EXPOSURE TO DIRECT SUN CAN DAMAGE NIGHT-VISION OPTIC.

RECOIL RECOVERY

In the event that the shock impact exceeds the capability of this scope, the batteries may momentarily lose electrical contact, resulting in a momentary loss of power to the scope. This scope incorporates a feature to recover power, and retain all settings. If this happens, the scope will automatically restore power in approximately one second. *The shooter may notice a brief flicker of the display.*

WARNING:

Use of this scope with higher than rated calibers VOIDS the warranty.

Applications:

- Rifle
- Paint-ball
- Pellet gun

This scope is intended and warranted for use with rifle calibers of .30 and lower (non-magnums). In some instances given bullet size and weight, along with barrel length, impact can be higher or lower.

Keep this device out of the reach of children.

Night Owl Optics®

1120 Alza Drive, El Paso, TX 79907
800-444-5994
Warranty Service: service@nightowloptics.com
www.nightowloptics.com

All rights reserved, including the right to reproduce this manual, or parts thereof, in any form.
Night Owl Optics® and NightShot® are registered trademarks of Night Owl Optics.